High-function General-purpose Inverters

RX Series V1 type

Versatile for a Wide Range of Applications

- Double rating VT 120%/1 min and CT 150% /1 min.
- Drive Programming
- LCD 5 line Digital Operator (Optional)
- Fieldbus communications with optional unit EtherCAT, CompoNet™ and DeviceNet™
- Built-in radio noise filter/EMC filter (Selectable)

Performance Specifications

Inverter 3G3RX-V1

3-phase 200-V Class

CT: Heavy load rating VT: Light load rating

Item		Model name (3G3RX-)	3-phase 200-V class														
			A2004-V1	A2007-V1	A2015-V1	A2022-V1	A2037-V1	A2055-V1	A2075-V1	A2110-V1	A2150-V1	A2185-V1	A2220-V1	A2300-V1	A2370-V1	A2450-V1	A2550-V1
Maximum applicable motor capacity (kW)		CT	0.4	0.75	1.5	2.2	3.7	5.5	7.5	11	15	18.5	22	30	37	45	55
		VT	0.75	1.5	2.2	3.7	5.5	7.5	11	15	18.5	22	30	37	45	55	75
Rated output capacity (kVA)	200V	CT	1.0	1.7	2.5	3.6	5.7	8.3	11.0	15.9	22.1	26.3	32.9	41.9	50.2	63.0	76.2
		VT	1.2	2.1	3.2	4.1	6.7	10.3	15.2	20.0	25.2	29.4	39.1	48.4	58.5	72.7	93.5
	240V	CT	1.2	2.0	3.1	4.3	6.8	9.9	13.3	19.1	26.6	31.5	39.4	50.2	60.2	75.6	91.4
		VT	1.5	2.6	3.9	4.9	8.1	12.4	18.2	24.1	30.3	35.5	46.9	58.1	70.2	87.2	112.2
Rated input voltage			3-phase 200 V -15% to 240 V +10%, 50/60 Hz ±5%														
Rated input current (A)		CT	3.3	5.5	8.3	12	18	26	35	51	70	84	105	133	160	200	242
		VT	3.9	7.2	10.8	13.9	23	37	48	64	80	94	120	150	186	240	280
Rated output voltage			3-phase 200 to 240 V (Cannot exceed that of incoming voltage)														
Rated output current (A)		CT	3.0	5.0	7.5	10.5	16.5	24	32	46	64	76	95	121	145	182	220
		VT	3.7	6.3	9.4	12	19.6	30	44	58	73	85	113	140	169	210	270
EMC Noise Filter			Built-in (EMC Directive EN61800-3 Category C3)														
Weight (kg)			3.5	3.5	3.5	3.5	3.5	6	6	6	14	14	14	22	30	30	43
Braking Resistor circuit	Regenerative braking		Built-in Braking Resistor circuit (separate Discharge Resistor)											Separate Regenerative Braking Unit			
	Min. connectable resistance (Ω)		50	50	35	35	35	16	10	10	7.5	7.5	5	---			
Maximum leakage current (mA)	EMC filter enabled		2.5					48			23						
	EMC filter disabled		0.1														

3-phase 400-V Class

CT: Heavy load rating VT: Light load rating

Item		Model name (3G3RX-)	3-phase 400-V class										
			A4004-V1	A4007-V1	A4015-V1	A4022-V1	A4037-V1	A4055-V1	A4075-V1	A4110-V1	A4150-V1	A4185-V1	A4220-V1
Maximum applicable motor capacity (kW)		CT	0.4	0.75	1.5	2.2	3.7	5.5	7.5	11	15	18.5	22
		VT	0.75	1.5	2.2	3.7	5.5	7.5	11	15	18.5	22	30
Rated output capacity (kVA)	400V	CT	1.0	1.7	2.6	3.6	6.2	9.6	13.1	17.3	22.1	26.3	33.2
		VT	1.3	2.1	3.3	4.6	7.6	11.0	15.2	20.0	25.6	29.7	39.4
	480V	CT	1.2	2.0	3.1	4.4	7.4	11.6	15.7	20.7	26.6	31.5	39.9
		VT	1.5	2.5	3.9	5.5	9.2	13.3	18.2	24.1	30.7	35.7	47.3
Rated input voltage			3-phase 380 V -15% to 480 V +10%, 50/60 Hz ±5%										
Rated input current (A)		CT	1.8	2.8	4.2	5.8	9.8	15	21	28	35	42	53
		VT	2.1	4.3	5.9	8.1	13.3	20	24	32	41	47	63
Rated output voltage			3-phase 380 to 480 V (Cannot exceed that of incoming voltage)										
Rated output current (A)		CT	1.5	2.5	3.8	5.3	9.0	14	19	25	32	38	48
		VT	1.9	3.1	4.8	6.7	11.1	16	22	29	37	43	57
EMC Noise Filter			Built-in (EMC Directive EN61800-3 Category C3)										
Weight (kg)			3.5	3.5	3.5	3.5	3.5	6	6	6	14	14	14
Braking Resistor circuit	Regenerative braking		Built-in Braking Resistor circuit (separate Discharge Resistor)										
	Min. connectable resistance (Ω)		100	100	100	100	70	70	35	35	24	24	20
Maximum leakage current (mA)	EMC filter enabled		5					95			56		
	EMC filter disabled		0.2										

Item		Model name (3G3RX-)	3-phase 400-V class							
			A4300-V1	A4370-V1	A4450-V1	A4550-V1	B4750-V1	B4900-V1	B411K-V1	B413K-V1
Applicable motor capacity (kW)		CT	30	37	45	55	75	90	110	132
		VT	37	45	55	75	90	110	132	160
Rated output capacity (kVA)	400V	CT	40.1	51.9	63.0	77.5	103.2	121.9	150.3	180.1
		VT	48.4	58.8	72.7	93.5	110.8	135	159.3	200.9
	480V	CT	48.2	62.3	75.6	93.1	123.8	146.3	180.4	216.1
		VT	58.1	70.6	87.2	112.2	133	162.1	191.2	241.1
Rated input voltage			3-phase 380 V -15% to 480 V +10%, 50/60 Hz ±5%							
Rated input current (A)		CT	64	83	100	121	164	194	239	286
		VT	77	94	116	149	176	199	253	300
Rated output voltage			3-phase 380 to 480 V (according to the input voltage)							
Rated output current (A)		CT	58	75	91	112	149	176	217	260
		VT	70	85	105	135	160	195	230	290
EMC Noise Filter			Built-in (EMC Directive EN61800-3 Category C3)							
Weight (kg)			22	30	30	30	55	55	70	70
Braking Resistor circuit	Regenerative braking		Separate Regenerative Braking Unit							
	Min. connectable resistance (Ω)		---							
Maximum leakage current (mA)	EMC filter enabled		56				0.2 (No enabled/disabled setting available)			
	EMC filter disabled		0.2							

Function Specifications

Inverter 3G3RX-V1

Function name			Specifications	
Enclosure ratings			IP20 (0.4 to 55 kW) IP00 (75 to 132 kW)	
Control method			Phase-to-phase sinusoidal modulation PWM	
Output frequency range			0.1 to 400 Hz	
Frequency precision			Digital command: ±0.01% of the maximum frequency, Analog command: ±0.2% of the maximum frequency (25±10°C)	
Frequency resolution			Digital setting: 0.01 Hz Analog setting: maximum frequency/4000 (Terminal FV: 12 bits/0 to +10 V), (Terminal FE: 12 bits/-10 to 10 V), (Terminal FI: 12 bits/0 to 20 mA)	
Voltage/Frequency characteristics			Heavy load rating (CT): V/f characteristics (constant torque, reduced torque, free V/f setting), sensorless vector control, 0-Hz sensorless vector control, sensor vector control Light load rating (VT): V/f characteristics (constant torque, reduced torque, free V/f setting), sensorless vector control	
Overload current rating			Heavy load rating (CT): 150%/60 s, 200%/3 s (180%/3 s for 75 kW or more) Light load rating (VT): 120%/60 s, 150%/5 s	
Instantaneous overcurrent protection			200% of the value of heavy load rating (CT)	
Acceleration/Deceleration time			0.01 to 3600 s (linear/curve selection)	
Speed fluctuation			Heavy load rating (CT): ±0.5% *1, *2 Light load rating (VT): ±0.5% *1	
Carrier frequency adjustment range			(For 0.4 to 55kW) Heavy load rating (CT): 0.5 to15 kHz Light load rating (VT): 0.5 to12 kHz	(For 75 to 132kW) Heavy load rating (CT): 0.5 to 10 kHz Light load rating (VT): 0.5 to 8 kHz
Starting torque	Sensor less vector control		(For 0.4 to 55kW) Heavy load rating (CT): 200%/0.3 Hz *1 Light load rating (VT): 150%/0.5 Hz *1	(For 75 to 132kW) Heavy load rating (CT): 180%/0.3 Hz *1 Light load rating (VT): 120%/0.5 Hz *1
	0-Hz sensorless vector control		(For 0.4 to 55kW) Heavy load rating (CT): 150%/Torque at 0 Hz *3 Light load rating (VT): No function available	(For 75 to132kW) Heavy load rating (CT): 130%/Torque at 0 Hz *3 Light load rating (VT): No function available
External DC injection braking			Operates when the starting frequency is lower than that in deceleration via the STOP command, when the frequency reference is lower than the operation frequency, or via an external input (braking power, time, and frequency are variable)	
Protective functions			Overcurrent protection, Overvoltage protection, Undervoltage protection, Electronic thermal protection, Temperature error protection, Momentary power interruption/Power interruption protection, Input phase loss protection, Braking resistor overload protection, Ground-fault current detection at power-on, USP error, External trip, Emergency shutoff trip, CT error, Communication error, Option error, etc.	
Input signal	Frequency settings	Standard Digital Operator	Setting via ⌃ ⌄ keys	
		External signal *4	0 to 10 VDC, -10 to 10 VDC (Input impedance: 10 kΩ), 4 to 20 mA (Input impedance: 100 Ω)	
		External port	Setting through RS-485 communications	
	Forward or Reverse operation/Stop	Standard Digital Operator	RUN/STOP (Forward/reverse switched via parameter settings)	
		External signal	Forward/Stop (Reverse/Stop available at the time of multi-functional input terminal allocation), 3-wire input available (at the time of control circuit terminal block allocation)	
		External port	Setting through RS-485 communications	
	Multi-function input *5		8 terminals, NO/NC switchable, sink/source logic switchable Heavy load (CT): 8 functions can be selected from among 72 Light load (VT): 8 functions can be selected from among 57	
	Thermistor input terminal		1 terminal (Positive/Negative temperature coefficient of resistance element switchable)	
Output signal	Multi-function output *5		5 open collector output terminals: NO/NC switchable, sink/source logic switchable 1 relay (SPDT contact) output terminal: NO/NC switchable Heavy load (CT): 6 functions can be selected from among 55 Light load (VT): 6 functions can be selected from among 51	
	Multi-function monitor output terminal		Analog voltage output (0 to 10 V) *6 , Analog current output (0 to 20 mA) *6 , Pulse train output (maximum frequency 3.6 kHz)	
Display monitor			Output frequency, Output current, Output torque, Frequency conversion value, Trip record, I/O terminal status, Electric power, etc.	
Other functions			• Heavy load rating (CT) V/f free setting (7), Upper/lower frequency limit, Frequency jump, Curve acceleration/deceleration, Manual torque boost level/break, Energy-saving operation, Analog meter adjustment, Starting frequency, Carrier frequency adjustment, Electronic thermal function (free setting available), External start/end (frequency/rate), Analog input selection, Trip retry, Restart during momentary power interruption, Various signal outputs, Reduced voltage startup, Overload limit, Initialization value setting, Automatic deceleration at power-off, AVR function, Automatic acceleration/deceleration, Auto tuning (Online/Offline) • Light load rating (VT) V/f free setting (7), Upper/lower frequency limit, Frequency jump, Curve acceleration/deceleration, Manual torque boost level/break, Energy-saving operation, Analog meter adjustment, Starting frequency, Carrier frequency adjustment, Electronic thermal function (free setting available), External start/end (frequency/rate), Analog input selection, Trip retry, Restart during momentary power interruption, Various signal outputs, Reduced voltage startup, Overload limit, Initialization value setting, Automatic deceleration at power-off, AVR function, Auto tuning (Online/Offline)	

*1 Applicable in the sensorless vector control
*2 Applicable in the 0-Hz sensorless vector control
*3 Applicable in the 0 Hz sensorless vector control when using a motor one size smaller in capacity than the inverter
*4 The maximum frequency is set to 9.8 V for a voltage input of 0 to 10 VDC and to 19.8 mA for an current input of 4 to 20 mA, respectively. If this causes any inconvenience, change the default datas.
*5 In the VT mode, the available functions are limited compared with the CT mode. The default setting and setting range of some functions also differ.
*6 The analog voltage and current values for the multi-function monitor output terminals show values that can only be used as a guide for analog meter connection. The maximum output value may differ slightly from 10 V or 20 mA due to the variability of the analog output circuit. If this causes any inconvenience, refer to the RX series V1 type User's Manual. (Man.No.I578) to adjust the default settings.

Function name			Specifications
Operating environment	Ambient operating temperature		Heavy load rating (CT): –10 to 50°C Light load rating (VT): –10 to 40°C
	Ambient storage temperature		–20 to 65°C
	Ambient operating humidity		20% to 90% (with no condensation)
	Vibration resistance *7		5.9m/s^2 (0.6G), 10 to 55Hz / 0.4 to 22kW 2.94m/s^2 (0.3G), 10 to 55Hz / 30 to 132kW
	Application environment		At a maximum altitude of 1,000 m (without corrosive gases or dust) *8
Options	PG Board		Sensor vector control 3G3AX-PG01
	EtherCAT Communication Unit		3G3AX-RX-ECT
	CompoNet™ Communication Unit		3G3AX-RX-CRT-E
	DeviceNet™ Communication Unit		3G3AX-RX-DRT-E
Other options			Braking Resistor, AC reactor, DC reactor, Digital Operator, Digital Operator cables, Noise filter, Regenerative braking unit, etc.
International standard	EC Directive	EMC Directive	EN61800-3: 2004
		Low Voltage Directive	EN61800-5-1: 2003
	UL/cUL		UL508C

*7 Complies with the test method specified in JIS C60068-2-6: 2010 (IEC 60068-2-6: 2007).
*8 If the altitude is higher than 1,000 m, reduce the amount of heat generation because air density decreases by 1% with the increasing altitude by 100 m. For switching devices such as IGBTs, the amount of heat generation is proportional to the current flowing in the device and the applied voltage. Therefore, reduce the value of the rated current by 1% with the increasing altitude by 100 m to use a standard inverter. However, this is applicable to an altitude of 2,500 m or lower.

Components and Functions

Note: Example of the 3G3RX-A2055-V1/A2075-V1/A2110-V1/A4055-V1/A4075-V1/A4110-V1

Inverter 3G3RX-V1

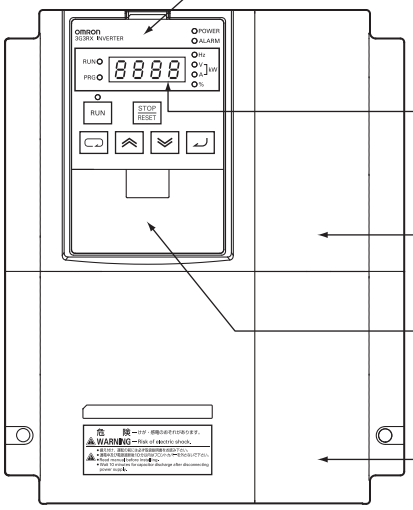

Digital Operator
Use this to set parameters, view various monitor data, run/stop the inverter, etc.

Data Display
This displays the frequency reference value, output frequency, parameter set value, or other relevant data.

Front Cover
Remove this to mount option boards.

Spacer Cover
Remove this to mount optional units or 5-line LCD Digital Operator.

Terminal block Cover
Remove this cover when wiring the terminal block.

Open the terminal block cover to wire the main circuit terminal block and the control circuit terminal block. Moreover, you can open the front cover to mount option boards.

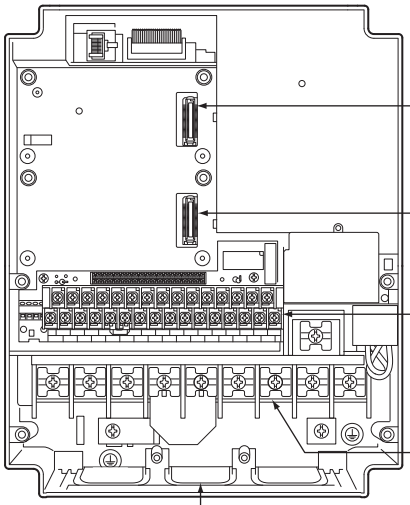

Connector for mounting option board 1
Use this connector to mount the optional board.

Connector for mounting option board 2
Use this connector to mount the optional board or communications units.

Control circuit terminal blocks
Use this to connect various digital/analog I/O signals for inverter control.

Main circuit terminal block
Use this to connect the inverter main power supply, motor, braking resistor, and other devices.

Backing plate
Cut off the cutout portions of this plate to connect power supply lines, signal lines, etc.

Connection Diagram

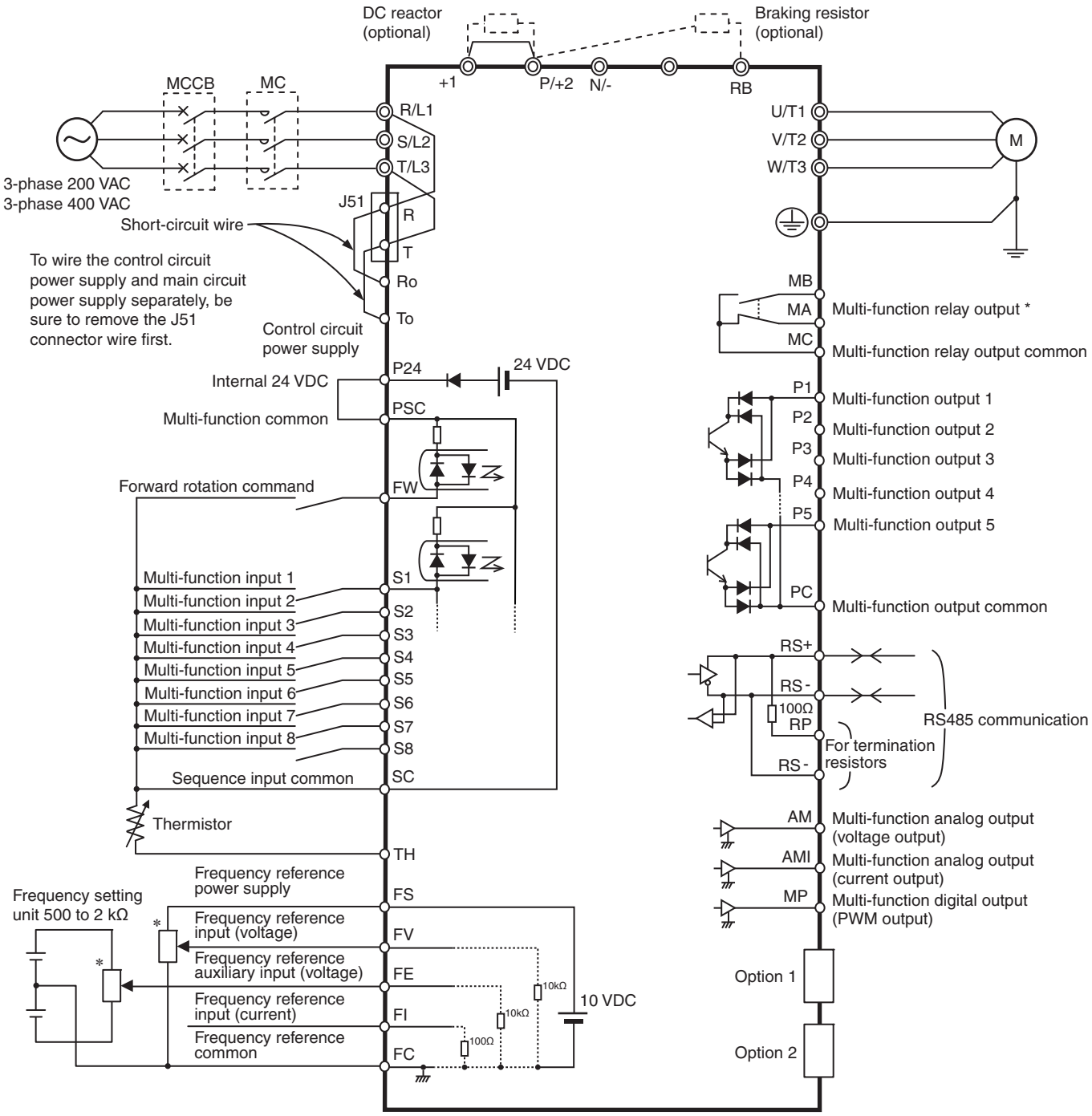

* Variable volume adjuster (2 kΩ 1/4 W or larger recommended)

Dimensions

(Unit: mm)

Inverter 3G3RX-V1

3G3RX-A2004-V1
3G3RX-A2007-V1
3G3RX-A2015-V1
3G3RX-A2022-V1
3G3RX-A2037-V1
3G3RX-A4004-V1
3G3RX-A4007-V1
3G3RX-A4015-V1
3G3RX-A4022-V1
3G3RX-A4037-V1

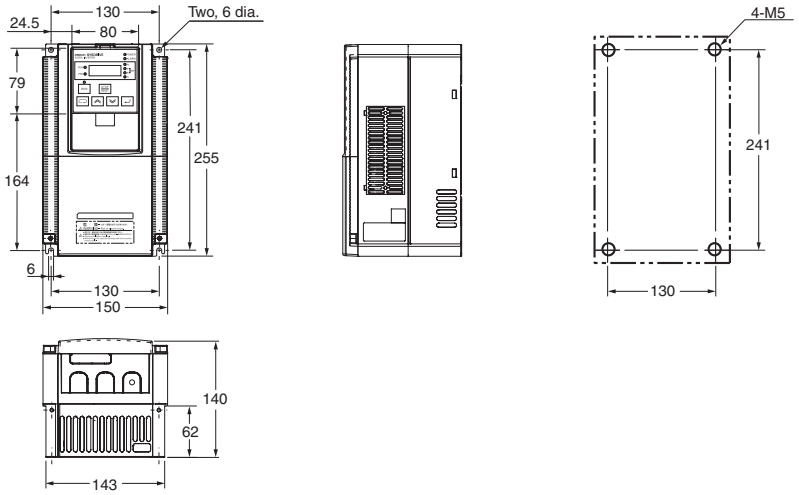

3G3RX-A2055-V1
3G3RX-A2075-V1
3G3RX-A2110-V1
3G3RX-A4055-V1
3G3RX-A4075-V1
3G3RX-A4110-V1

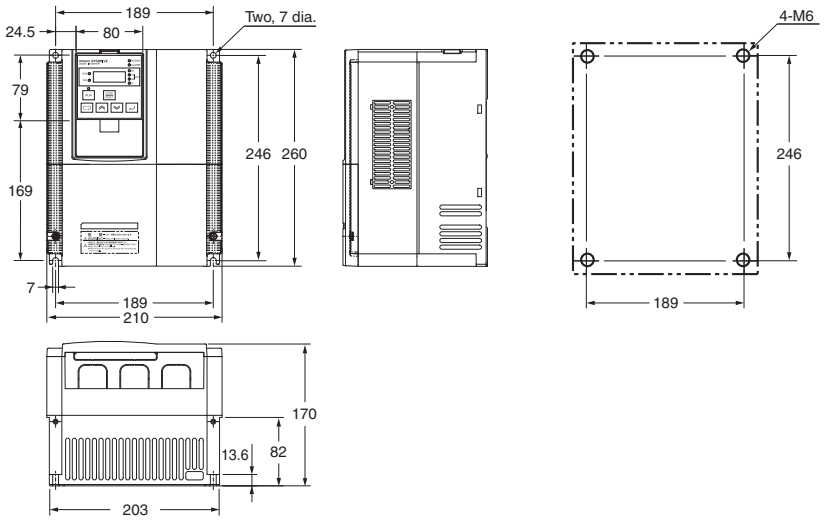

3G3RX-A2150-V1
3G3RX-A2185-V1
3G3RX-A2220-V1
3G3RX-A4150-V1
3G3RX-A4185-V1
3G3RX-A4220-V1

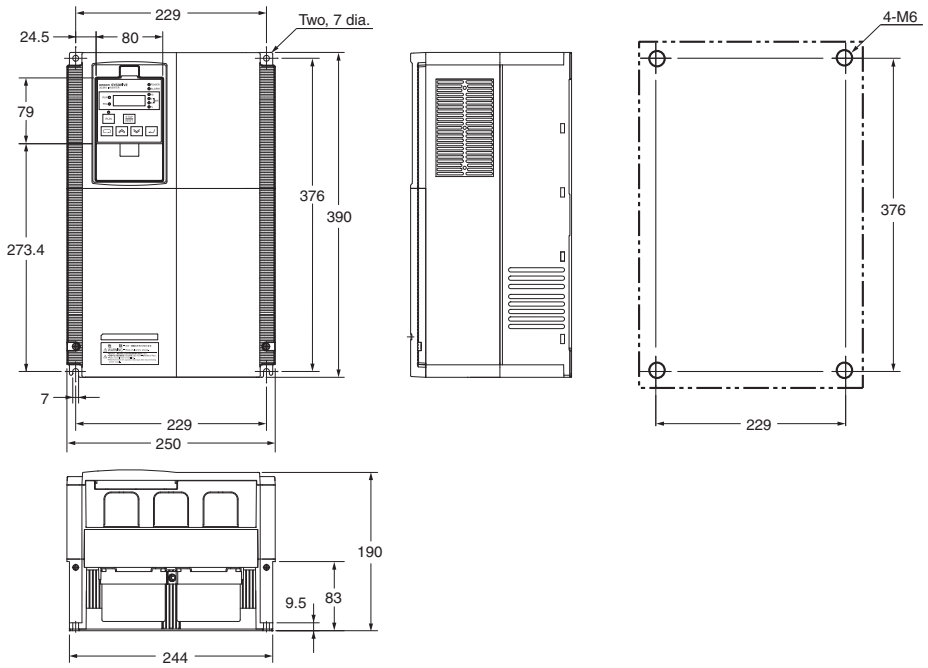

3G3RX-A2300-V1
3G3RX-A4300-V1

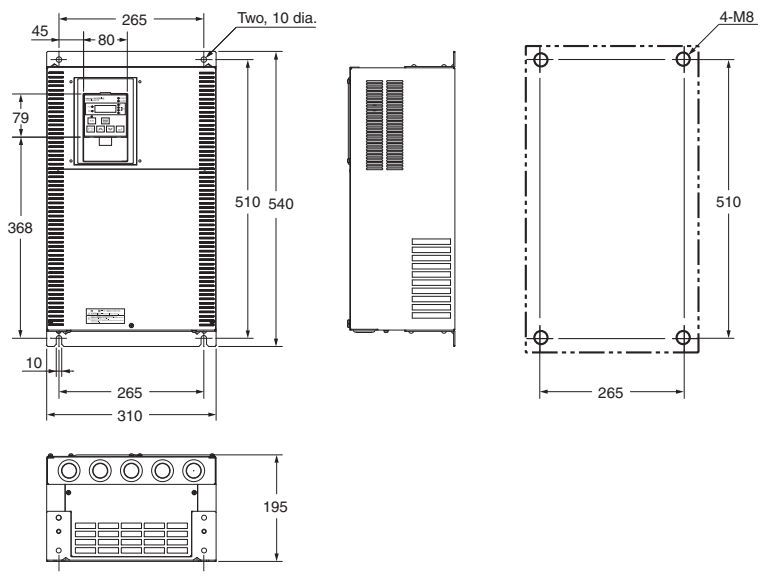

3G3RX-A2370-V1
3G3RX-A2450-V1
3G3RX-A4370-V1
3G3RX-A4450-V1
3G3RX-A4550-V1

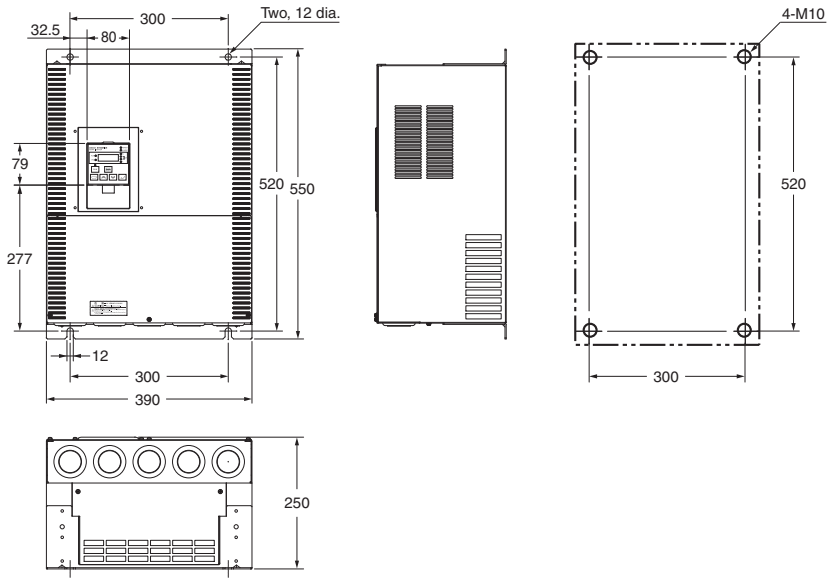

3G3RX-A2550-V1

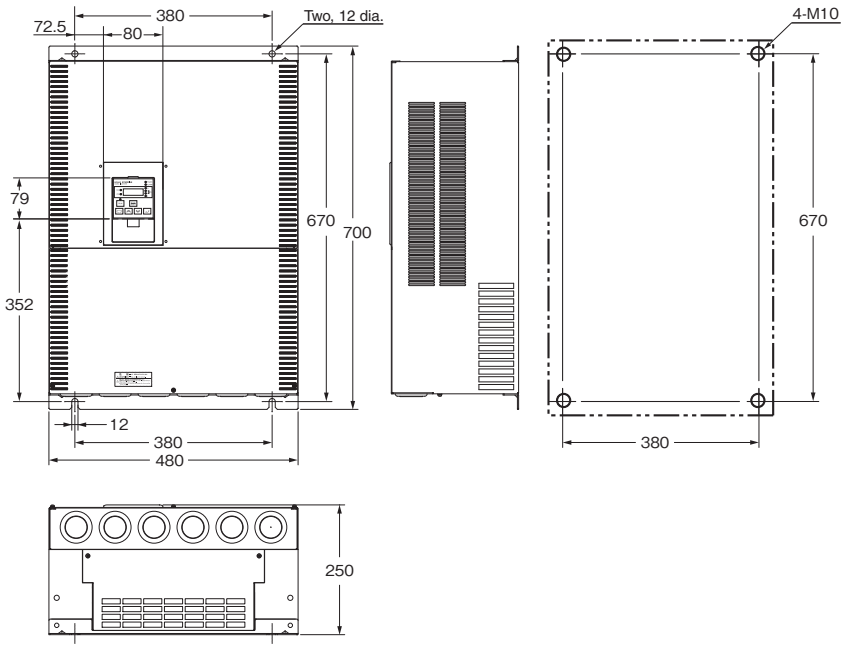

3G3RX-B4750-V1
3G3RX-B4900-V1

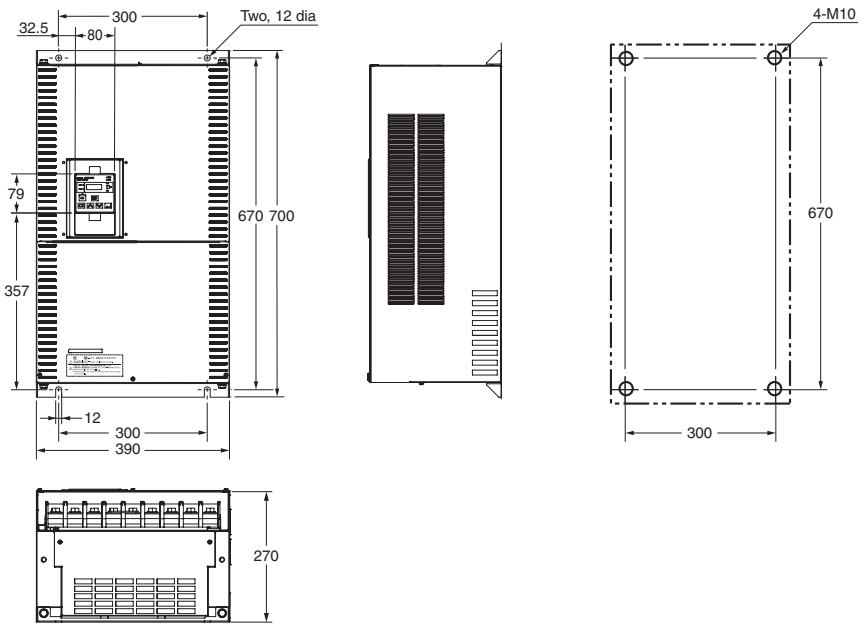

3G3RX-B411K-V1
3G3RX-B413K-V1

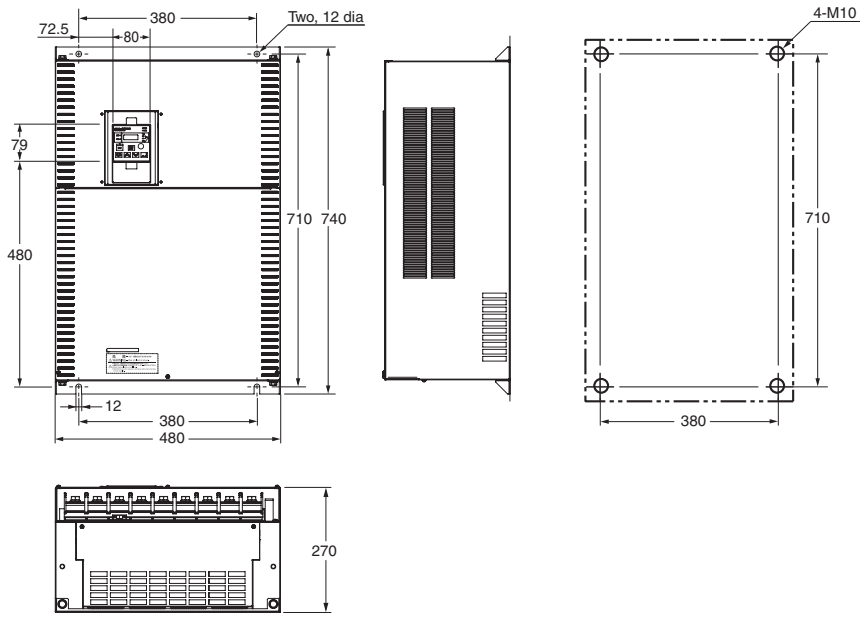

Communication Unit

RX-Series V1 type EtherCAT Communication Unit 3G3AX-RX-ECT

This is the communication unit to connect the High-function General-purpose Inverters RX-series V1 type to EtherCAT network.
This communication unit passed the conformance test of EtherCAT.

Note: 1. It is not possible to use a EtherCAT Communication Unit 3G3AX-RX-ECT with a RX-series (Model without "-V1").
2. Sysmac Studio can be used when using with NJ/NX-series Controller.
To connect the NJ Controller, Sysmac Studio version 1.03 or higher is required.
To connect the NX Controller, Sysmac Studio version 1.13 or higher is required.

Common Specifications

Item		Specifications
Power supply		Supplied from the inverter
Protective structure		Open type (IP20)
Ambient operating temperature		–10 to 50°C
Ambient storage temperature		–20 to 65°C
Ambient operating humidity		20% to 90% RH (with no condensation)
Vibration resistance		5.9 m/s^2 (0.6 G), 10 to 55 Hz
Application environment		At a maximum altitude of 1,000 m (without corrosive gases or dust)
Weight		100 g max. (Shipping weight: approx. 200 g)
International standard	UL/cUL	UL508C
	EC Directives	EMC Directive : EN61800-3 Low Voltage Directive : EN61800-5-1

EtherCAT Communications Specifications

Item	Specifications
Communications standard	IEC 61158 Type12, IEC 61800-7 CiA 402 drive profile
Physical layer	100BASE-TX (IEEE802.3)
Connector	RJ45 x 2 (shielded type) ECAT IN : EtherCAT input ECAT OUT : EtherCAT output
Communications media	Category 5 or higher (cable with double, aluminum tape and braided shielding) is recommended.
Communications distance	Distance between nodes: 100 m max.
Process data	Fixed PDO mapping PDO mapping
Mailbox (CoE)	Emergency messages, SDO requests, SDO responses, and SDO information
Distributed clock	FreeRun mode (asynchronous)
LED display	L/A IN (Link/Activity IN) x 1 L/A OUT (Link/Activity OUT) x 1 RUN x 1 ERR x 1
CiA402 drive profile	Velocity mode

Dimensions (mm)

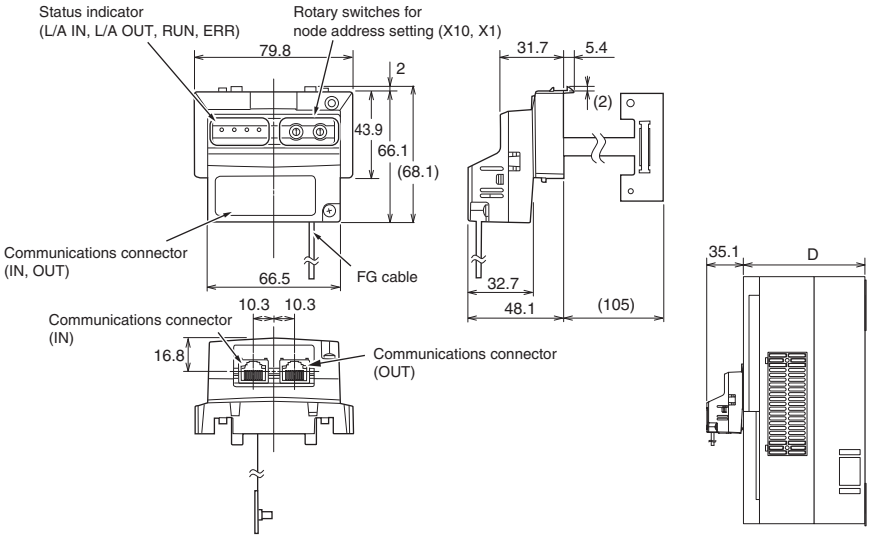

Note: After the EtherCAT Communication Unit is installed, dimension D of the inverter increases by 35.1 mm.
(Dimension D of the inverter varies depending on the capacity. Refer to the RX-series V1 type USER'S MANUAL (Cat.No.I578))

RX-Series V1 type CompoNet™ Communication Unit 3G3AX-RX-CRT-E

This is the communication unit to connect the High-function General-purpose Inverters RX-series V1 type to CompoNet™ network.
Note: It is not possible to use a CompoNet™ Communication Unit 3G3AX-RX-CRT-E with a RX-series (Model without "-V1").

Common Specifications

Item		Specifications
Power supply		Supplied from the inverter
Protective structure		IP20
Ambient operating temperature		–10 to 50°C
Ambient storage temperature		–20 to 65°C
Ambient operating humidity		20% to 90% RH (with no condensation)
Vibration resistance		5.9 m/s^2 (0.6 G), 10 to 55 Hz
Application environment		At a maximum altitude of 1,000 m (without corrosive gases or dust)
Insulation resistance		500VAC (between isolated circuits)
Weight		100 g max. (Shipping weight: approx. 170 g)
International standard	UL/cUL	UL508
	EC Directives	EN61800-3 : 2004 (2004/108/EC) Second environment, Category C3 EN61800-5-1 : 2007 (2006/95/EC) SELV

CompoNet™ Communications Specifications

Item	Specifications
Slave type	Word Slave Unit (Mixed)
Certification	CompoNet™ Conformance Tested
CompoNet™ Profile	AC Drive (0x02)
Communication power supply	--- (External power not required)
Node Address	0 to 63, set with inverter parameter P190 or the rotary switches.
Baud rates supported	4 Mbps, 3 Mbps, 1.5 Mbps, 93.75 kbps. Automatically detecting baud rate of Master Unit
Default Connection path	Supported, set with inverter parameter P046
Supported Assemblies	Basic Remote IO (Output assembly 20, Input assembly 70) Extended Speed IO (21, 71) Extended Speed and Torque Control (123, 173) Special IO (100, 150) Extended Control IO (101, 151) Extended Control IO and Multi function IO monitor (101, 153) Flexible Format (139, 159) Extended Speed and Acceleration Control (110, 111)
EDS file	Depending on the RX-series V1 type inverter model

Dimensions (mm)

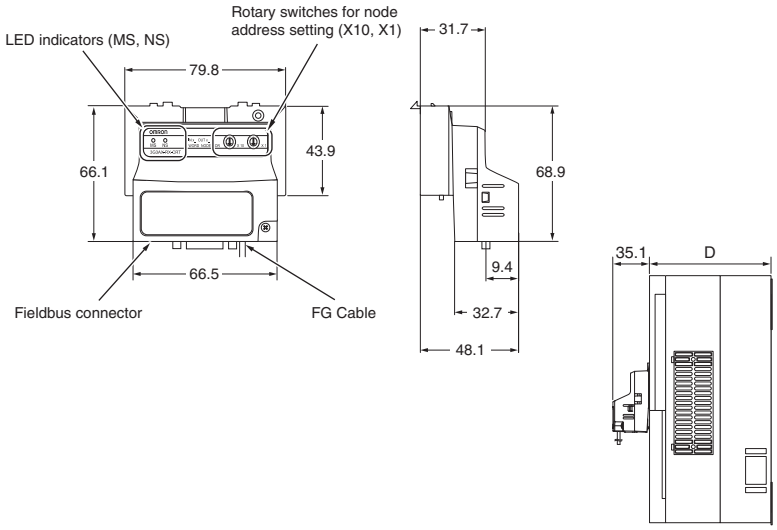

Note: After the CompoNet™ Communication Unit is installed, dimension D of the inverter increases by 35.1 mm. (Dimension D of the inverter varies depending on the capacity. Refer to the RX-series V1 type USER'S MANUAL (Cat.No.I578))

RX-Series V1 type DeviceNet™ Communication Unit 3G3AX-RX-DRT-E

This is the communication unit to connect the High-function General-purpose Inverters RX-series V1 type to DeviceNet™ network.
Note: It is not possible to use a DeviceNet™ Communication Unit 3G3AX-RX-DRT-E with a RX-series (Model without "-V1").

Common Specification

Item		Specifications
Power supply		Supplied from the inverter
Protective structure		IP20
Ambient operating temperature		–10 to 50°C
Ambient storage temperature		–20 to 65°C
Ambient operating humidity		20% to 90% RH (with no condensation)
Vibration resistance		5.9 m/s^2 (0.6 G), 10 to 55 Hz
Application environment		At a maximum altitude of 1,000 m (without corrosive gases or dust)
Insulation resistance		500 VAC (between isolated circuits)
Weight		100 g max. (Shipping weight: approx. 170 g)
International standard	UL/cUL	UL508
	EC Directives	EN61800-3 : 2004 (2004/108/EC) Second environment, Category C3 EN61800-5-1 : 2007 (2006/95/EC) SELV

DeviceNet™ Communications Specifications

Item	Specifications
Certification	DeviceNet™ Conformance Tested
DeviceNet™ Profile	AC Drive (0x02)
Supported connections	Remote I/O: Master-Slave connection Poll Bit-Strobe COS Cyclic Explicit Messages Conform to DeviceNet™ specifications
Communication power supply	11 to 25VDC (MAX 50 mA, type 20 mA)
Unit device address range	MAC ID 0 to 63, set with inverter parameter P192
Baud rates supported	125, 250, or 500 kbps. Automatically detects baud rate of Master Unit.
Default Connection path	Supported, set with inverter parameter P046
Supported Assemblies	Basic Remote IO (Output assembly 20, Input assembly 70) Extended Speed IO (21, 71) Extended Speed and Torque Control (123, 173) Special IO (100, 150) Extended Control IO (101, 151) Extended Control IO and Multi function IO monitor (101, 153) Flexible Format (139, 159) Extended Speed and Acceleration Control (110, 111) In case the DeviceNet™ master is configured using user allocation, only the input /output pairs can be configured.
EDS file	Depending on the RX-series V1 type inverter model

Dimensions (mm)

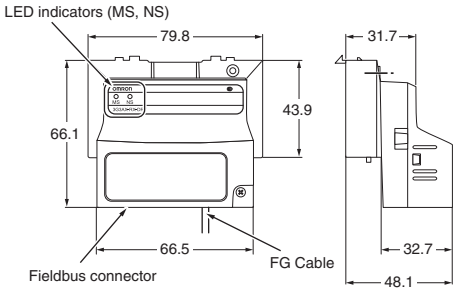

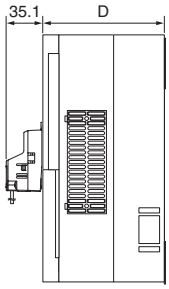

Note: After the DeviceNet™ Communication Unit is installed, dimension D of the inverter increases by 35.1 mm. (Dimension D of the inverter varies depending on the capacity. Refer to the RX-series V1 type USER'S MANUAL (Cat.No.I578))

Options

Regenerative Braking Unit 3G3AX-RBU□□

Used with a Braking Resistor when the deceleration time of the motor is needed to be reduced in the 3G3RX.

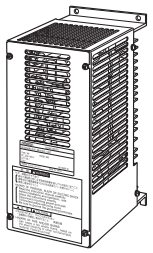

Connection Example

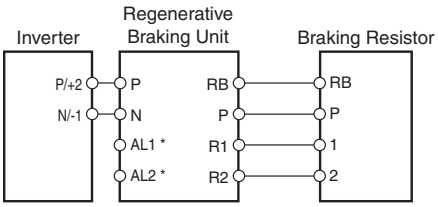

* The alarm output terminals for the Regenerative Braking Unit.
Provide a circuit to turn off the primary power supply for the Inverter when the temperature relay of the built-in resistor or optional Braking Resistor is activated.

Specifications

Built-in Resistance Type (3G3AX-RBU21/-RBU22/-RBU41)

Class		3-phase 200-V class		3-phase 400-V class
Model name (3G3AX-)		RBU21	RBU22	RBU41*1
Connection resistance		17 Ω min.	17 Ω min.	34 Ω min.
Operating voltage ON/OFF		ON : 362.5 ± 5 V OFF: 355 ± 5 V (–5% or –10% setting available)		ON : 725 ± 5 V OFF: 710 ± 5 V (–5% or –10% setting available)
Operation indication		LED ON (Lit)		
Parallel interlocking operation function*2		5 units max.		
Built-in resistor	Internal resistance	120 W, 180 Ω	120 W, 20 Ω	120 W, 180 Ω × 2 in series
	Allowable consecutive ON time	10 s max.	0.5 s max.	10 s max.
	Allowable operation cycle	Cycle 1/10 (ON for 10 s, OFF for 90 s)	Cycle 1/80 (ON for 0.5 s, OFF for 40 s)	Cycle 1/10 (ON for 10 s, OFF for 90 s)
	Power consumption	Instantaneous 0.73 kW Short-time rating 120 W	Instantaneous 6.6 kW Short-time rating 120 W	Instantaneous 1.46 kW Short-time rating 240 W
Protective function	Built-in resistor overheat protection	• Cooling fin temperature Relay operates at approximately 200°C or higher. Recovers at approximately 170°C or lower. • Built-in temperature fuse (recovery impossible)*3 • Rating of contact 250 V AC 200mA (R load) 12 V DC 500mA (R load) 42 V DC 200mA (R load) • Minimum load 1mA (R load)		
Operating environment	Ambient temperature	–10 to 50°C		
	Ambient storage temperature	–20 to 65°C		
	Ambient operating humidity	20% to 90% (with no condensation)		
	Vibration	5.9 m/s² (0.6G) 10 to 55 Hz		
	Location	At a maximum altitude of 1,000 m (without corrosive gases or dust)		
Paint color		Munselle 5Y7/1 (cooling fan: aluminum ground color)		

*1 To use the braking resistor (Model: 3G3AX-RAB/RBB/RBC) for the 400-V class regenerative braking unit, be sure to remove the built-in resistor and connect two resistors of the same model in series. Using a 400-V class regenerative braking unit with only a single braking resistor connected may cause damage to the braking resistor.
*2 Use DIP switches to set the number of connected units.
*3 The built-in resistor has a thermal fuse. If the alarm terminals are not connected, the fuse may blow out in order to prevent the resistor from burning due to overheating. If the fuse blows out, the built-in resistor must be replaced.

Specifications

External resistor type (3G3AX-RBU23/-RBU24/-RBU42/-RBU43)

Class		3-phase 200-V class		3-phase 400-V class	
Model name (3G3AX-)		RBU23	RBU24	RBU42*1	RBU43*1
Discharge resistance	Continuous operation	6 Ω min.	4 Ω min.	24 Ω min.	12 Ω min.
	Short-time/ operation Allowable operation cycle/ Continuous ON time	4 Ω min. 1/5 2 min	2 Ω min. 1/5 2 min	10 Ω min. 1/10 10 s	6 Ω min. 1/5 2 min
Operating voltage ON/OFF		ON: 362.5 ± 5 V OFF: 355 ± 5 V (–5% or –10% setting available)		ON: 725 ± 5 V OFF: 710 ± 5 V (–5% or –10% setting available)	
Operation indication		LED ON (Lit)			
Maximum number of units operating in parallel*2		2 units max.			
Protective functions	Internal power module overheat protection	Built-in relay specifications Cooling fin temperature Relay operates at approximately 100°C or higher. • Rating of contact : 240 V AC 3 A (R load) 36 V DC 2 A (R load) • Minimum load : 5 V DC 50 mA (R load)			
Operating environment	Ambient temperature	–10 to 50°C			
	Ambient storage temperature	–20 to 65°C			
	Ambient operating humidity	20% to 90% (with no condensation)			
	Vibration	4.9 m/s² (0.5G) 10 to 55 Hz			
	Location	At a maximum altitude of 1,000 m (without corrosive gases or dust)			
Paint color		Munselle 5Y7/1 (cooling fan: aluminum ground color)			

*1 To use the braking resistor (3G3AX-RAB/RBB/RBC) for the 400-V class regenerative braking unit, be sure to remove the built-in resistor and connect two resistors of the same model in series. Using a 400-V class regenerative braking unit with only a single braking resistor connected may cause damage to the braking resistor.
*2 Use DIP switches to set the number of connected units.

Dimensions (Unit: mm)

3G3AX-RBU21/-RBU22/-RBU41

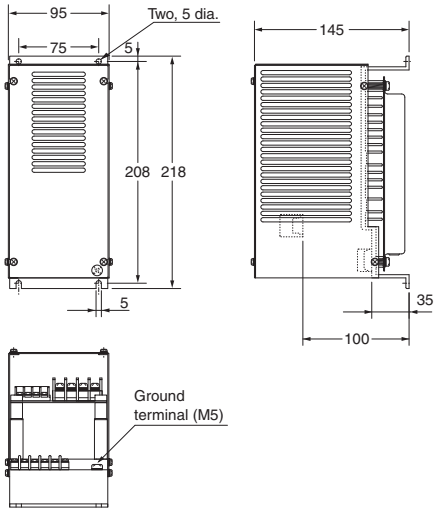

3G3AX-RBU23

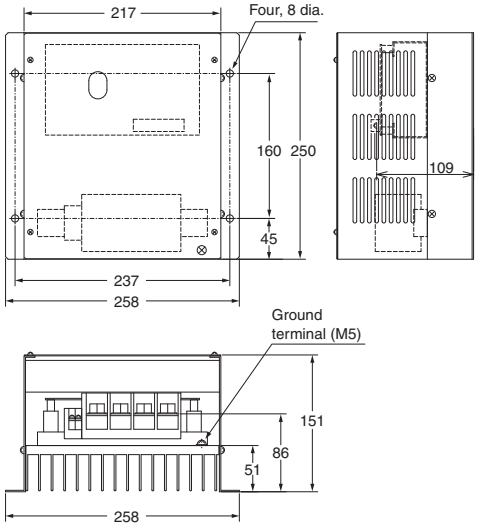

3G3AX-RBU24

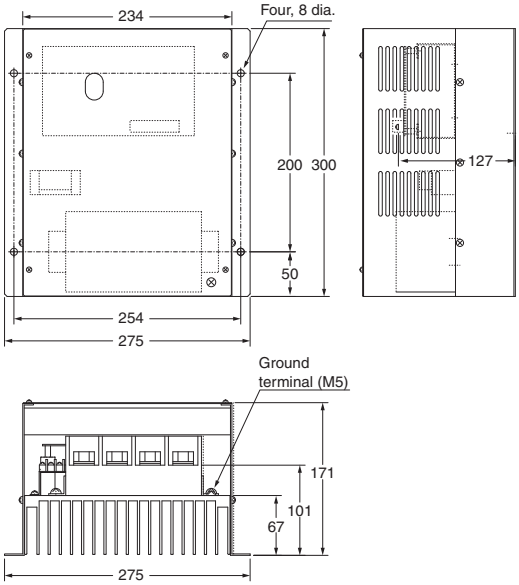

3G3AX-RBU42

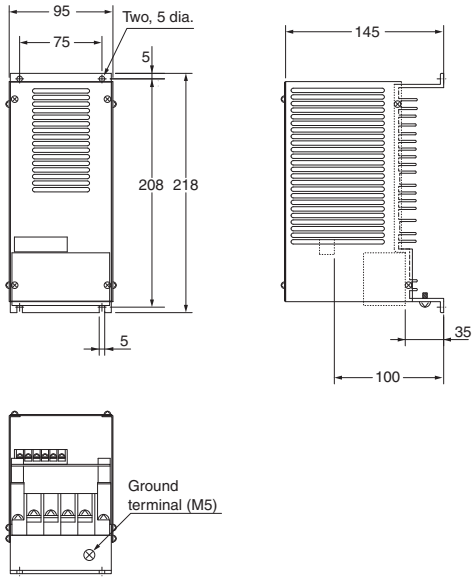

3G3AX-RBU43

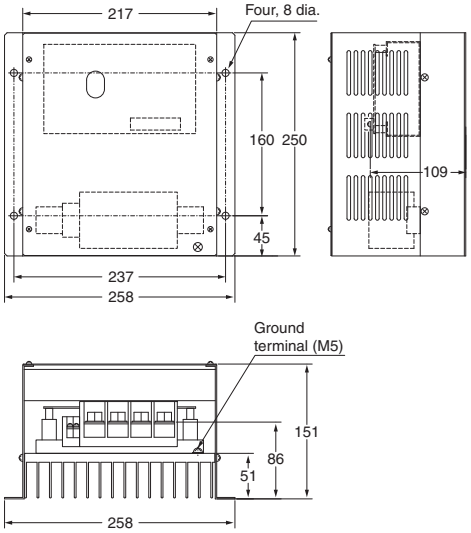

Braking Resistor 3G3AX-RBA/-RBB/-RBC□□□□

Consumes the regenerative motor energy with a resistor to reduce deceleration time.

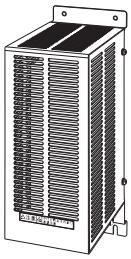

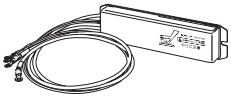

Connection Example

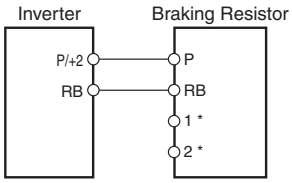

* The alarm output terminals for the Braking Resistor. Provide a circuit to turn off the primary power supply for the Inverter when the temperature relay of the Braking Resistor is activated.

Specifications

Model		Compact type (3G3AX-RBA□□□□)				Standard type (3G3AX-RBB□□□□)				Medium capacity type (3G3AX-RBC□□□□)		
		1201	1202	1203	1204	2001	2002	3001	4001	4001	6001	12001
Resistance	Capacity	120 W				200 W		300 W	400 W	400 W	600 W	1200 W
	Resistance (Ω)	180	100	50	35	180	100	50	35	50	35	17
Allowable brakingfrequency (%)		5	2.5	1.5	1.0	10	7.5	7.5	7.5	10		
Allowable continuousbraking time (s)		20	12	5	3	30			20	10		
Weight (kg)		0.27				0.97		1.68	2.85	2.5	3.6	6.5
Fault detection function		Built-in thermal (Contact capacity: 240 V AC 2 A max.) Minimum current: 5 mA, Normally ON (NC contact) Built-in temperature fuse (recovery impossible)								Built-in temperature relay, Normally ON (NC contact) Contact capacity:240 V AC 3 A (R load), 0.2 A (L load), 36 V DC 2 A (R load)		
General specifications	Ambient operating temperature	−10 to 50°C										
	Ambient storage temperature	−20 to 65°C										
	Ambient operating humidity	20% to 90% (RH) with no condensation										
	Vibration	5.9 m/s (0.6 G) 10 to 55 Hz Complies with JISC0911										
	Location	At a maximum altitude of 1,000 m (without corrosive gases or dust)										
	Cooling method	Self-cooling										

* Built-in resistors are equipped with thermal fuses. If the alarm is not connected, the fuse may blow to prevent burnout due to overheating. If the fuse blows, the built-in resistor will need to be replaced.

Dimensions (Unit: mm)

3G3AX-RBA

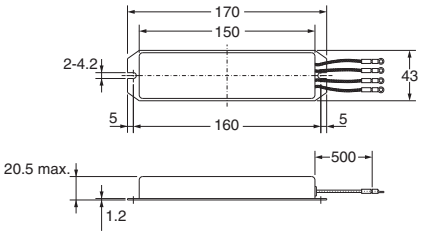

3G3AX-RBB

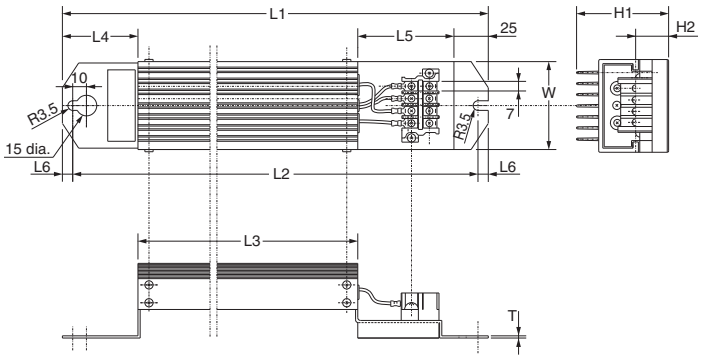

3G3AX-RBC4001

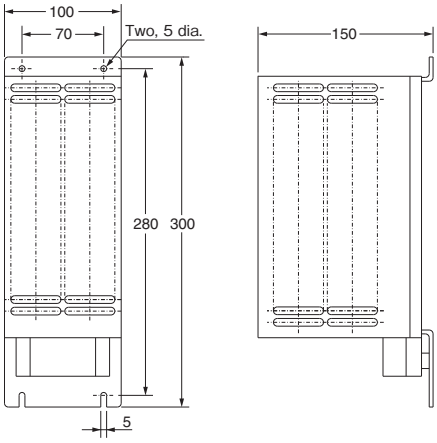

Model	Dimensions (mm)					
	L1	L2	L3	L4	L5	L6
3G3AX-RBB2001	310	295	160	55	70	7.5
3G3AX-RBB2002	310	295	160	55	70	7.5
3G3AX-RBB3001	470	455	320	55	70	7.5
3G3AX-RBB4001	435	422	300	50	60	6.5

Model	Dimensions (mm)				Weight (kg)	Screw size
	H1	H2	W	T		
3G3AX-RBB2001	67	12	64	1.6	0.97	M3.5
3G3AX-RBB2002	67	12	64	1.6	0.97	
3G3AX-RBB3001	67	12	64	1.6	1.68	
3G3AX-RBB4001	94	15	76	2	2.85	

3G3AX-RBC6001

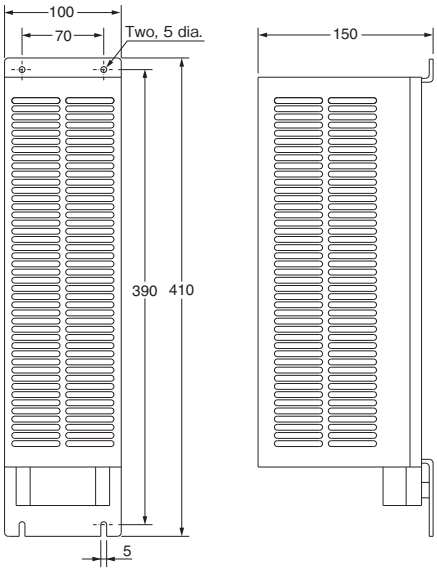

3G3AX-RBC12001

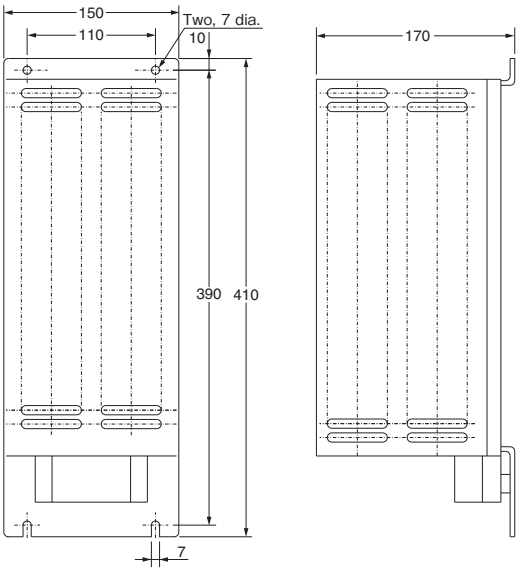

Radio Noise Filter 3G3AX-ZCL□

Connected to the inverter input/output cables to reduce noise coming into the inverter from the power supply line and noise flowing from the inverter into the power supply line.

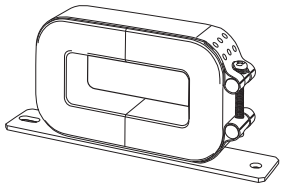

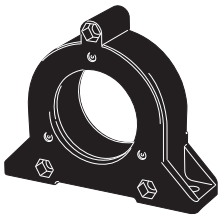

Connection Example

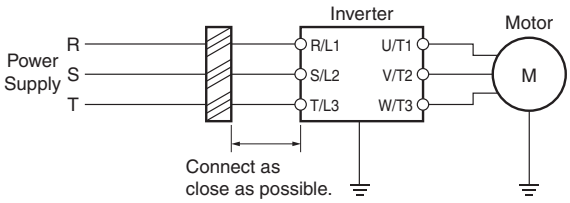

Note 1: Wind each of three phase wires in the same direction.
2: Can be used on both the input and output sides of the Inverter.

Specifications
3G3AX-ZCL1

Applicable Inverter capacity (kW)	200 V class				400 V class			
	Input		output		Input		output	
	Quan-tity	No. of turns	Quan-tity	No. of turns	Quan-tity	No. of turns	Quan-tity	No. of turns
0.2	1	4	1	4	1	4	1	4
0.4	1	4	1	4	1	4	1	4
0.75	1	4	1	4	1	4	1	4
1.5	1	4	1	4	1	4	1	4
2.2	1	4	1	4	1	4	1	4
3.0	1	4	1	4	1	4	1	4
3.7	1	4	1	4	1	4	1	4
4.0	1	4	1	4	1	4	1	4
5.5	1	4	1	4	1	4	1	4
7.5	1	4	1	4	1	4	1	4
11	1	4	1	4	1	4	1	4
15	1	4	1	4	1	4	1	4

Specifications
3G3AX-ZCL2

Applicable Inverter capacity (kW)	200 V class				400 V class			
	Input		output		Input		output	
	Quan-tity	No. of turns	Quan-tity	No. of turns	Quan-tity	No. of turns	Quan-tity	No. of turns
0.1	1	4	1	4	1	4	1	4
0.2	1	4	1	4	1	4	1	4
0.4	1	4	1	4	1	4	1	4
0.75	1	4	1	4	1	4	1	4
1.5	1	4	1	4	1	4	1	4
2.2	1	4	1	4	1	4	1	4
3.0	1	4	1	4	1	4	1	4
3.7	1	4	1	4	1	4	1	4
4.0	1	4	1	4	1	4	1	4
5.5	1	4	1	4	1	4	1	4
7.5	1	4	1	4	1	4	1	4

Note: Select options by the maximum applicable motor capacity of heavy and light load rating.

Dimensions (Unit: mm)

3G3AX-ZCL1

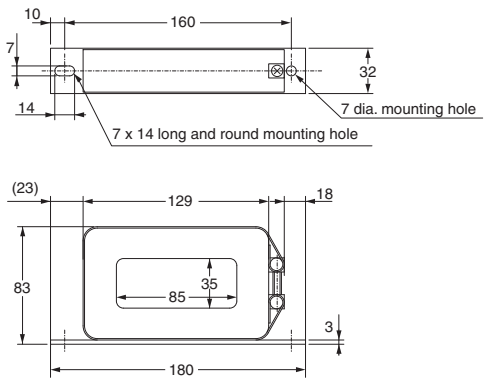

3G3AZ-ZCL2

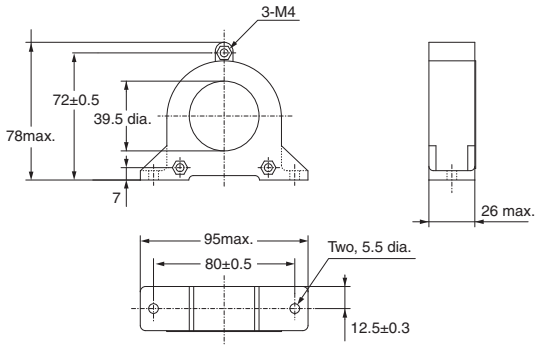

Input Noise Filter 3G3AX-NFI□□

Reduces noise coming into the inverter from the power supply line and noise flowing from the inverter into the power supply line. Connect as close to the Inverter as possible.

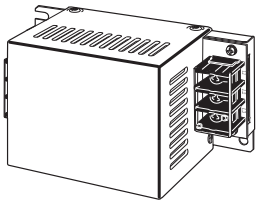

Connection Example

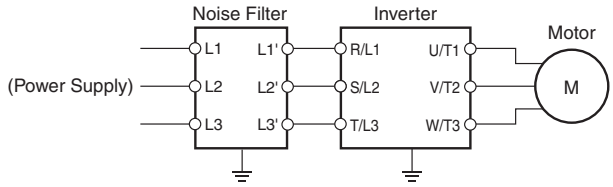

Specifications

Voltage class	Max. applicable motor capacity (kw)	Model	Max. input voltage	Rated input current (at 50°C)	Heat generation (W)	Leakage current at 60 Hz	Case enclosure rating	Terminal size	Wire diameter	Weight (kg)
200 V class	0.4, 0.75	3G3AX-NFI21	250V AC +10%	6A	3	1.5mA MAX (250V AC)	Plastic, IP00	M4	1.25 mm²	0.5
	1.5	3G3AX-NFI22		10A	4		Plastic, IP00	M4	2 mm²	0.6
	2.2, 3.7	3G3AX-NFI23		20A	6		Plastic, IP00	M4	2 mm², 3.5 mm²	0.7
	5.5	3G3AX-NFI24		30A	9		Plastic, IP00	M4	5.5 mm²	0.8
	7.5	3G3AX-NFI25		40A	12		Plastic, IP00	M5	8 mm²	1.4
	11	3G3AX-NFI26		60A	17		Plastic, IP00	M5	14 mm²	1.8
	15	3G3AX-NFI27		80A	21		Metal, IP00	M6	22 mm²	3.6
	18.5	3G3AX-NFI28		100A	23		Metal, IP00	M8	30 mm²	4.6
	22, 30	3G3AX-NFI29		150A	45		Metal, IP00	M8	38 mm², 60 mm²	9.0
	37	3G3AX-NFI2A		200A	50		Metal, IP00	M10	100 mm² or 38 mm², 2 wires parallel	16
	45	3G3AX-NFI2B		250A	68		Metal, IP00	M10	100 mm² or 38 mm², 2 wires parallel	16
	55	3G3AX-NFI2C		300A	56		Metal, IP00	M10	150 mm² or 60 mm², 2 wires parallel	23
400 V class	0.4 to 2.2	3G3AX-NFI41	480V AC +10%	7A	2	7.5mA MAX (480V AC)	Plastic, IP00	M4	1.25 mm², 2 mm²	0.7
	3.7	3G3AX-NFI42		10A	4		Plastic, IP00	M4	2 mm²	0.7
	5.5, 7.5	3G3AX-NFI43		20A	6		Plastic, IP00	M4	2 mm², 3.5 mm²	0.7
	11	3G3AX-NFI44		30A	9		Plastic, IP00	M4	5.5 mm²	0.8
	15	3G3AX-NFI45		40A	12		Plastic, IP00	M5	8 mm²	1.4
	18.5	3G3AX-NFI46		50A	15		Plastic, IP00	M5	14 mm²	1.6
	22	3G3AX-NFI47		60A	17		Plastic, IP00	M5	14 mm²	1.8
	30	3G3AX-NFI48		80A	21		Metal, IP00	M6	22 mm²	3.6
	37	3G3AX-NFI49		100A	23		Metal, IP00	M8	38 mm²	4.6
	45, 55	3G3AX-NFI4A		150A	45		Metal, IP00	M8	38 mm², 60 mm²	9.0

Note: Select options by the maximum applicable motor capacity of heavy and light load rating.

Dimensions (Unit: mm)

3G3AX-NFI21
3G3AX-NFI22

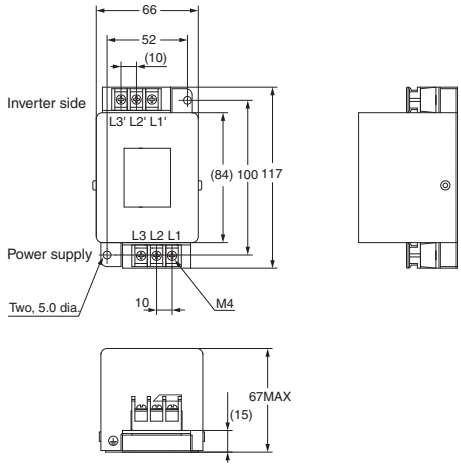

3G3AX-NFI25/3G3AX-NFI26
3G3AX-NFI45/3G3AX-NFI46
3G3AX-NFI47

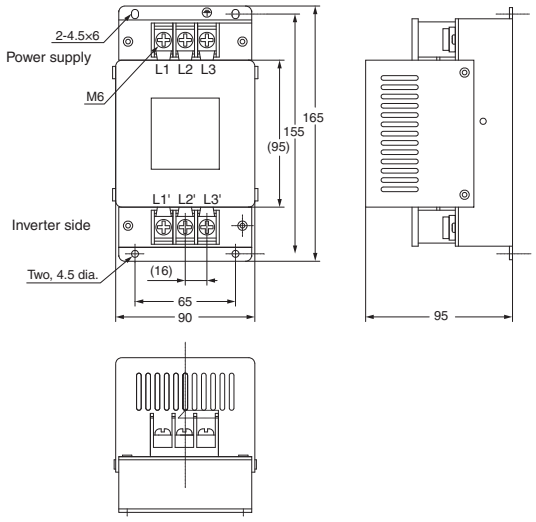

3G3AX-NFI23/3G3AX-NFI24
3G3AX-NFI41/3G3AX-NFI42
3G3AX-NFI43/3G3AX-NFI44

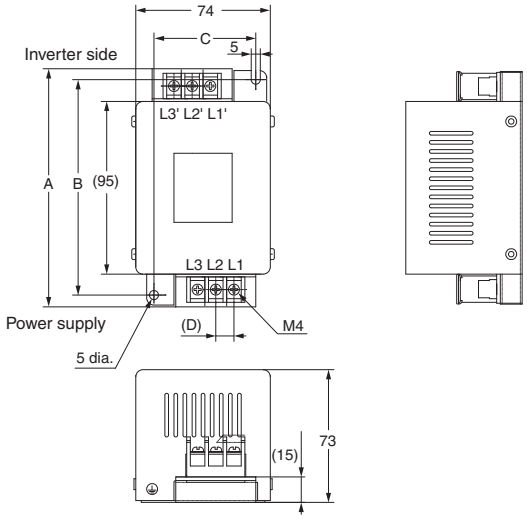

Model	Dimensions (mm)			
	A	B	C	D
3G3AX-NFI23	128	118	56	10
3G3AX-NFI24	144	130	56	11
3G3AX-NFI41	144	130	56	11
3G3AX-NFI42	144	130	56	11
3G3AX-NFI43	144	130	56	11
3G3AX-NFI44	144	130	56	11

3G3AX-NFI27/3G3AX-NFI28
3G3AX-NFI29/3G3AX-NFI48
3G3AX-NFI49/3G3AX-NFI4A

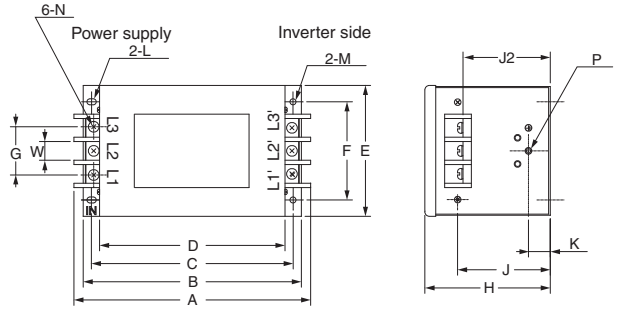

Model	Dimensions (mm)															
	A	B	C	D	E	F	G	H	J	J2	K	L	M	N	P	W
3G3AX-NFI27	217	200	185	170	120	90	44	115	85	82	20	R2.75 Length 7	5.5 dia.	M6	M4	17
3G3AX-NFI28	254	230	215	200	150	120	57	115	80	75	30	R3.75 Length 8	6.5 dia.	M8	M6	23
3G3AX-NFI29	314	300	280	260	200	170	57	130	90	85	35	R3.75 Length 8	6.5 dia.	M8	M6	23
3G3AX-NFI48	217	200	185	170	120	90	44	115	85	82	20	R2.75 Length 7	5.5 dia.	M6	M4	17
3G3AX-NFI49	254	230	215	200	150	120	57	115	80	75	30	R3.75 Length 8	6.5 dia.	M8	M6	23
3G3AX-NFI4A	314	300	280	260	200	170	57	130	90	85	35	R3.75 Length 8	6.5 dia.	M8	M6	23

3G3AX-NFI2A/3G3AX-NFI2B
3G3AX-NFI2C

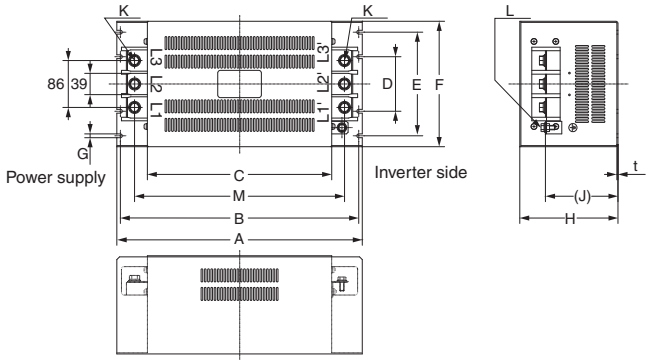

Model	Dimensions (mm)												
	A	B	C	D	E	F	G	H	J	K	L	M	N
3G3AX-NFI2A	450	430	338	100	190	230	7	180	(133)	M10	M8	385	1.0
3G3AX-NFI2B													
3G3AX-NFI2C	500	475	400	-	160	200	12	180	(133)	M10	M8	445	1.2

EMC Noise Filter 3G3AX-EFI□□□

Separately installed option used to comply with the EC's EMC Directives. Select a filter appropriate for the Inverter model.
Although an EMC Noise Filter is built into the RX, it may be necessary to provide another EMC Noise Filter when the cable between the Motor and the Inverter is long.

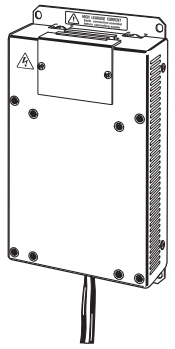

Connection Example

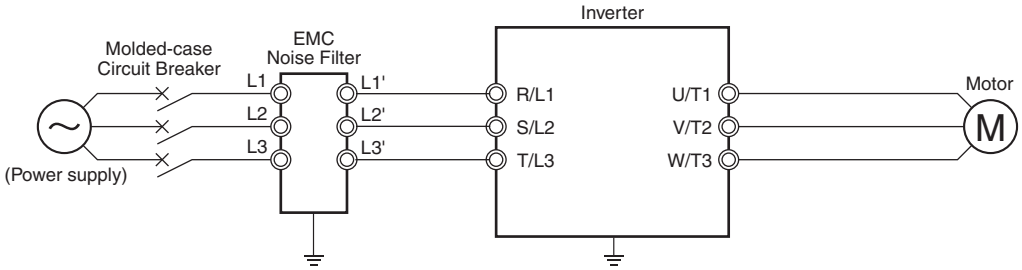

Specifications

Voltage class	Max. applicable motor capacity (kw)		Model	Input current In (A)	Heat gener-ation (W)	Leakage current (480V AC) at 60 Hz	Class	Case enclosure rating	Terminal size	Wire dia.	Weight (kg)
	200 V class	400 V class									
200 V class/ 400 V class	0.4, 0.75	0.4 to 2.2	3G3AX-EFI41	7	4	150mA MAX	A	Plastic, IP00	M4	1.25 mm², 2 mm²	0.7
	1.5	3.7	3G3AX-EFI42	10	4	150mA MAX				2 mm²	0.7
	2.2, 3.7	5.5, 7.5	3G3AX-EFI43	20	8	170mA MAX			M5	2 mm², 3.5 mm²	1.0
	5.5	11	3G3AX-EFI44	30	9	170mA MAX				5.5 mm²	1.3
	7.5	15	3G3AX-EFI45	40	15	170mA MAX				8 mm²	1.4
	-	18.5	3G3AX-EFI46	50	15	250mA MAX		Metal, IP00	M6	14 mm²	2.9
	11	22	3G3AX-EFI47	60	15	250mA MAX				14 mm²	3.0
	15	30	3G3AX-EFI48	80	21	250mA MAX				22 mm²	3.6
	18.5	37	3G3AX-EFI49	100	23	250mA MAX			M8	30 mm², 38 mm²	5.0
	22, 30	45, 55	3G3AX-EFI4A	150	45	250mA MAX				38 mm², 60 mm²	9.0
	37	75, 90	3G3AX-EFI4B	200	50	250mA MAX			M10	100 mm² or 38 mm², 2 wires parallel	16.0

Note: Select options by the maximum applicable motor capacity of heavy and light load rating.

Dimensions (Unit: mm)

3G3AX-EFI41
3G3AX-EFI42

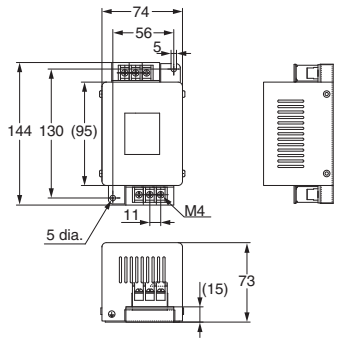

3G3AX-EFI43/3G3AX-EFI44
3G3AX-EFI45

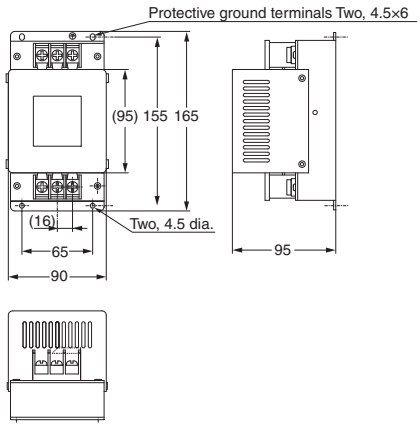

3G3AX-EFI46/3G3AX-EFI47/3G3AX-EFI48
3G3AX-EFI49/3G3AX-EFI4A

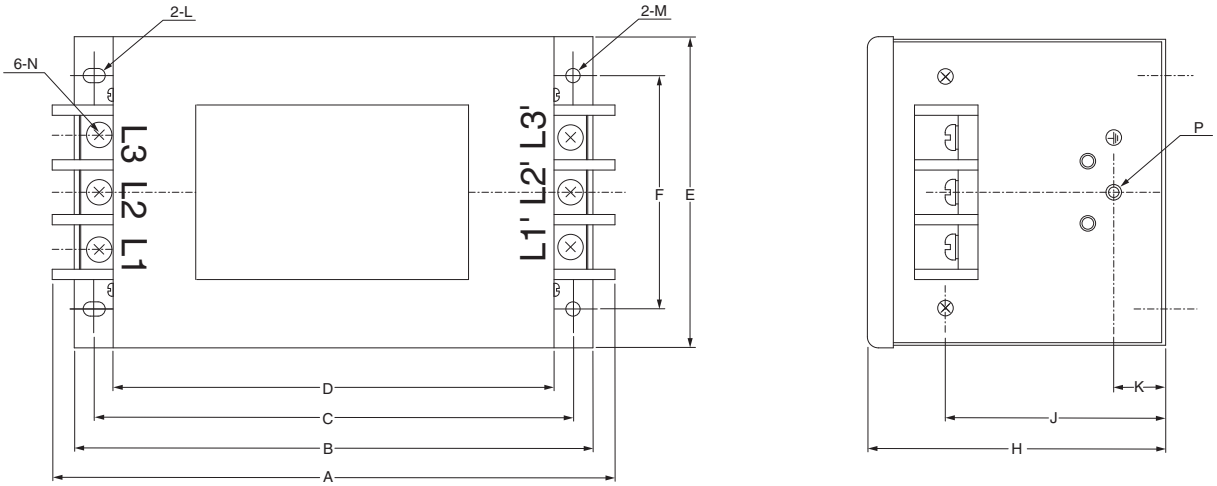

Model	Dimensions (mm)												
	A	B	C	D	E	F	H	J	K	L	M	N	P
3G3AX-EF146	217	220	185	170	120	90	115	85	20	R2.75 Length 7	5.5 dia.	M6	M4
3G3AX-EF147													
3G3AX-EF148													
3G3AX-EF149	254	230	215	200	150	120	115	80	30	R3.25 Length 8	6.5 dia.	M8	M6
3G3AX-EF14A	314	300	280	260	200	170	130	90	35	R3.25 Length 8	6.5 dia.	M8	M6

3G3AX-EFI4B

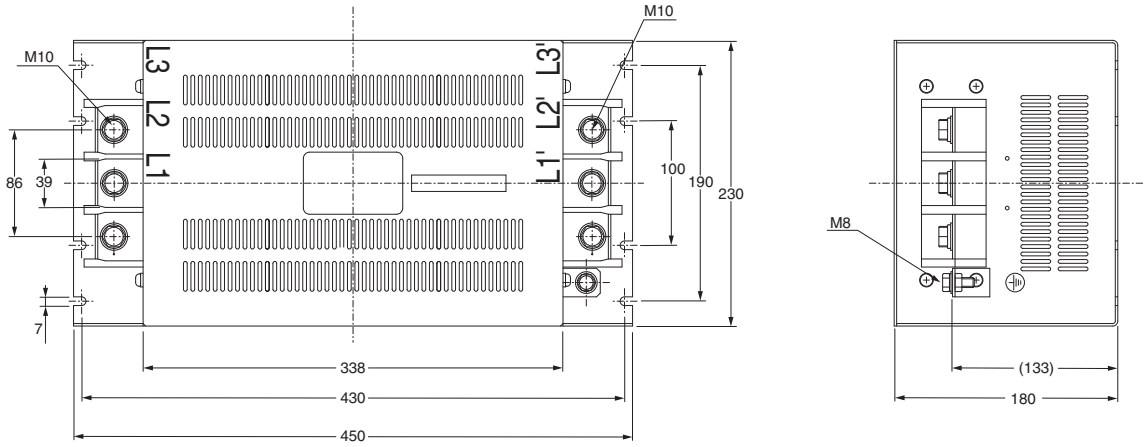

Output Noise Filter 3G3AX-NFO□□

Reduces noise generated by the Inverter. Connect as close to the Inverter as possible.

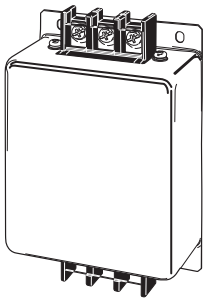

Connection Example

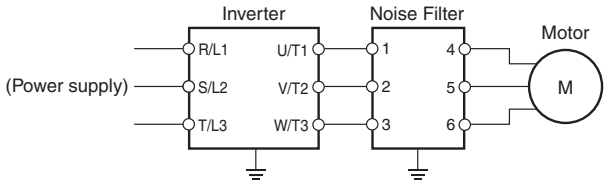

Specifications

Max. applicable motor capacity (kW)		Model	Rated voltage	Rated input current (A)	Weight (kg)
200 V class	400 V class				
0.4, 0.75	0.4 to 2.2	3G3AX-NFO01	500V AC	6	0.7
1.5, 2.2	3.7	3G3AX-NFO02		12	0.9
3.7, 5.5	5.5 to 11	3G3AX-NFO03		25	2.1
7.5, 11	15 to 22	3G3AX-NFO04		50	3.7
15	30, 37	3G3AX-NFO05		75	5.7
18.5, 22	45	3G3AX-NFO06		100	8.4
30, 37	55, 75	3G3AX-NFO07		150	9

Note: Select options by the maximum applicable motor capacity of heavy and light load rating.

Dimensions (Unit: mm)

3G3AX-NFO01
3G3AX-NFO02

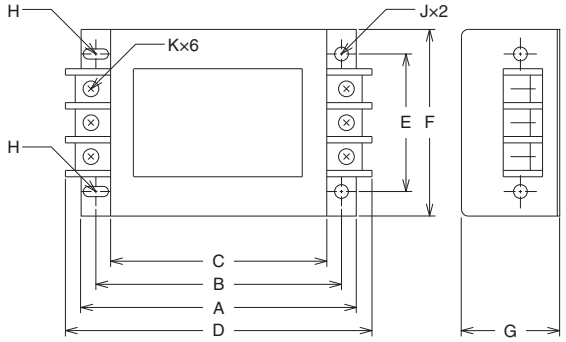

3G3AX-NFO03/3G3AX-NFO04/3G3AX-NFO05
3G3AX-NFO06/3G3AX-NFO07

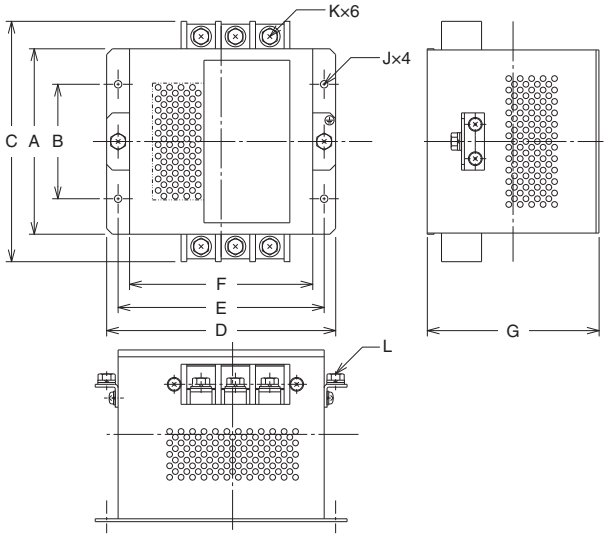

Model	A	B	C	D	E	F	G	H	J	K	L
3G3AX-NFO01	140	125	110	156	70	95	50	R: 2.25mm Length: 6mm	4.5 mm dia.	M4	-
3G3AX-NFO02	160	145	130	176	80	110	70	R: 2.75mm Length: 7mm	5.5 mm dia.	M4	-
3G3AX-NFO03	112	80	154	160	145	130	120	-	6.5 mm dia.	M4	-
3G3AX-NFO04	162	100	210	200	180	160	150	-	6.5 mm dia.	M5	M5
3G3AX-NFO05	182	100	230	220	200	180	170	-	6.5 mm dia.	M6	M6
3G3AX-NFO06	182	100	237	220	200	180	170	-	6.5 mm dia.	M8	M8
3G3AX-NFO07	202	150	257	240	220	200	170	-	6.5 mm dia.	M8	M8

DC Reactor 3G3AX-DL□□□□

Used to suppress harmonic current generated from the Inverter.
Suppresses harmonic current better than the AC Reactor and can be used with the AC Reactor.

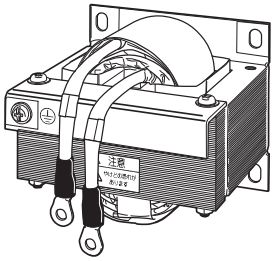

Connection Example

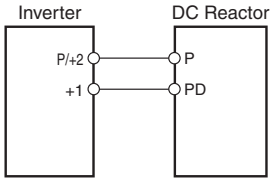

Specifications

Voltage class	Model	Figure No.	Max. applicable motor capacity (kW)	Dimensions (mm)									Weight (kg)	Standard applicable wire
				W	D	H	A	B	X	Y	C	K		
200-V class	3G3AX-DL2004	1	0.4	66	90	98	-	95	56	72	5.2 x 8	M4	1.0	1.25 mm² min.
	3G3AX-DL2007		0.75	66	90	98	-	105	56	72	5.2 x 8	M4	1.3	1.25 mm² min.
	3G3AX-DL2015		1.5	66	90	98	-	115	56	72	5.2 x 8	M4	1.6	2 mm² min.
	3G3AX-DL2022		2.2	86	100	116	-	105	71	80	6 x 9	M4	2.1	2 mm² min.
	3G3AX-DL2037		3.7	86	100	118	-	120	71	80	6 x 9	M4	2.6	3.5 mm² min.
	3G3AX-DL2055	2	5.5	111	100	210	-	110	95	80	7 x 11	M5	3.6	8 mm² min.
	3G3AX-DL2075		7.5	111	100	212	-	120	95	80	7 x 11	M6	3.9	14 mm² min.
	3G3AX-DL2110		11	146	120	252	-	110	124	96	7 x 11	M6	6.5	22 mm² min.
	3G3AX-DL2150		15	146	120	256	-	120	124	96	7 x 11	M8	7.0	38 mm² min.
	3G3AX-DL2220	3	18.5, 22	120	175	356	140	145	98	151	7 x 11	M8	9.0	60 mm² min.
	3G3AX-DL2300		30	120	175	386	155	150	98	151	7 x 11	M8	13.0	38 mm² x 2 min.
	3G3AX-DL2370		37	120	175	390	155	150	98	151	7 x 11	M10	13.5	38 mm² x 2 min.
	3G3AX-DL2450		45	160	190	420	180	150	120	168	7 x 11	M10	19.0	60 mm² x 2 min.
	3G3AX-DL2550		55	160	190	424	180	180	120	168	7 x 11	M12	24.0	80 mm² x 2 min.
400-V class	3G3AX-DL4004	1	0.4	66	90	98	-	85	56	72	5.2 x 8	M4	0.8	1.25 mm² min.
	3G3AX-DL4007		0.75	66	90	98	-	95	56	72	5.2 x 8	M4	1.1	1.25 mm² min.
	3G3AX-DL4015		1.5	66	90	98	-	115	56	72	5.2 x 8	M4	1.6	2 mm² min.
	3G3AX-DL4022		2.2	86	100	116	-	105	71	80	6 x 9	M4	2.1	2 mm² min.
	3G3AX-DL4037		3.7	86	100	116	-	120	71	80	6 x 9	M4	2.6	2 mm² min.
	3G3AX-DL4055		5.5	111	100	138	-	110	95	80	7 x 11	M4	3.6	3.5 mm² min.
	3G3AX-DL4075		7.5	111	100	138	-	115	95	80	7 x 11	M4	3.9	3.5 mm² min.
	3G3AX-DL4110	2	11	146	120	250	-	105	124	96	7 x 11	M5	5.2	5.5 mm² min.
	3G3AX-DL4150		15	146	120	252	-	120	124	96	7 x 11	M6	7.0	14 mm² min.
	3G3AX-DL4220	3	18.5, 22	120	175	352	140	145	98	151	7 x 11	M6	9.5	22 mm² min.
	3G3AX-DL4300		30	120	175	356	140	145	98	151	7 x 11	M8	9.5	30 mm² min.
	3G3AX-DL4370		37	120	175	386	155	150	98	151	7 x 11	M8	13.5	38 mm² min.
	3G3AX-DL4450		45	160	190	416	180	145	120	168	7 x 11	M8	16.5	60 mm² min.
	3G3AX-DL4550		55	160	190	416	190	170	120	168	7 x 11	M8	23.0	38 mm² x 2 min.

Note: Select options by the maximum applicable motor capacity of heavy and light load rating.

Dimensions (Unit: mm)

Fig. 1

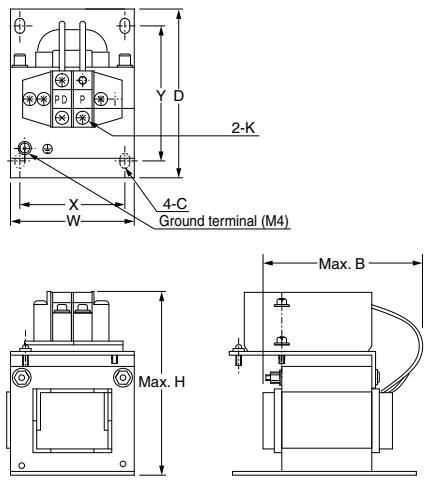

Fig. 2

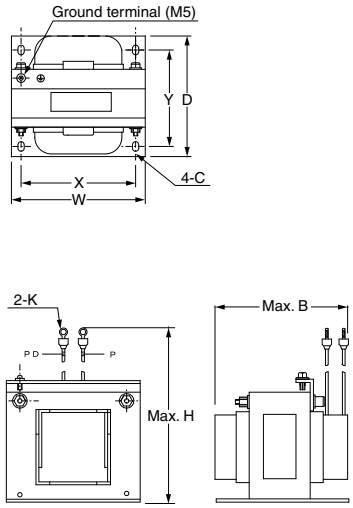

Fig. 3

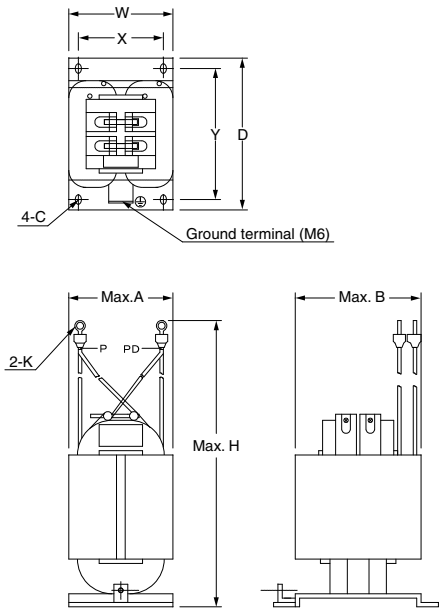

AC Reactor 3G3AX-AL□□□□

Connect the AC Reactor if the capacity of the power supply is much larger than that of the Inverter or the power factor is required to be improved.

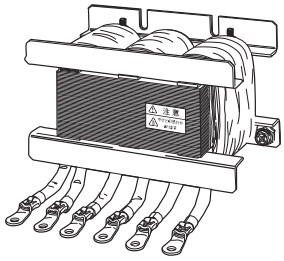

Connection Example

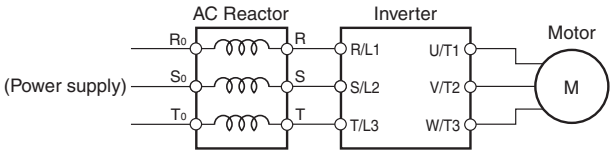

Specifications

Voltage class	Model	Max. applicable motor capacity (kw)	Dimensions (mm)								Weight (kg)
			A	C	D	E	H	H1	X	Y	
200-V class	3G3AX-AL2025	0.4 to 1.5	120	82	60	40	150	94	50	67	2.8
	3G3AX-AL2055	2.2, 3.7	120	98	60	40	150	94	50	75	4.0
	3G3AX-AL2110	5.5, 7.5	150	103	70	55	170	108	60	80	5.0
	3G3AX-AL2220	11, 15	180	113	75	55	190	140	90	90	10.0
	3G3AX-AL2330	18.5, 22	180	113	85	60	230	140	125	90	11.0
	3G3AX-AL2500	30, 37	260	113	85	60	290	202	100	90	19.0
	3G3AX-AL2750	45, 55	260	144	110	80	290	207	125	112	25.0
400-V class	3G3AX-AL4025	0.4 to 1.5	130	82	60	40	150	94	50	67	2.7
	3G3AX-AL4055	2.2, 3.7	130	98	60	40	150	94	50	75	4.0
	3G3AX-AL4110	5.5, 7.5	150	116	75	55	170	106	60	98	6.0
	3G3AX-AL4220	11, 15	180	103	75	55	190	140	100	80	10.0
	3G3AX-AL4330	18.5, 22	180	123	85	60	230	140	100	100	11.5
	3G3AX-AL4500	30, 37	260	113	85	60	290	202	100	90	19.0
	3G3AX-AL4750	45, 55	260	146	110	80	290	207	125	112	25.0

Note: Select options by the maximum applicable motor capacity of heavy and light load rating.

Dimensions (Unit: mm)

3G3AX-AL2025
3G3AX-AL2055

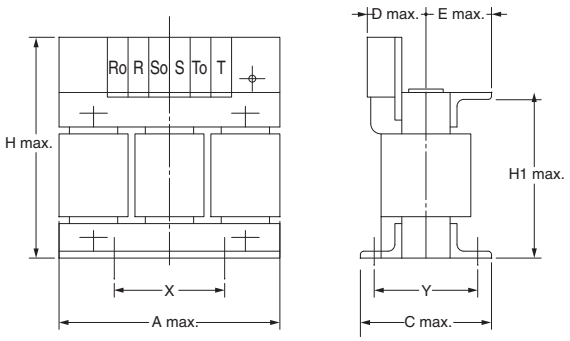

3G3AX-AL2110/3G3AX-AL2220
3G3AX-AL2330/3G3AX-AL2500/3G3AX-AL2750

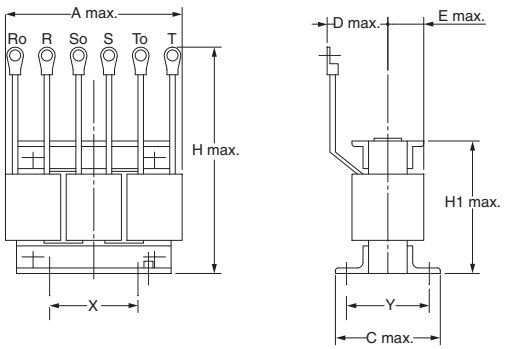

3G3AX-AL4025/3G3AX-AL4055
3G3AX-AL4110

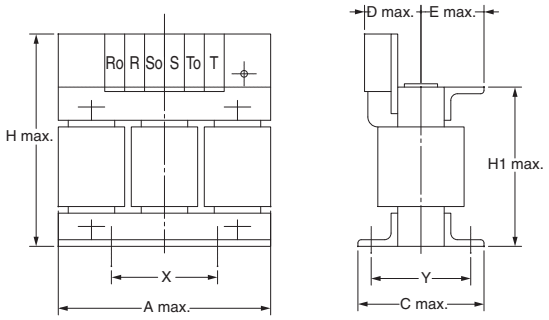

3G3AX-AL4220/3G3AX-AL4330
3G3AX-AL4500/3G3AX-AL4750

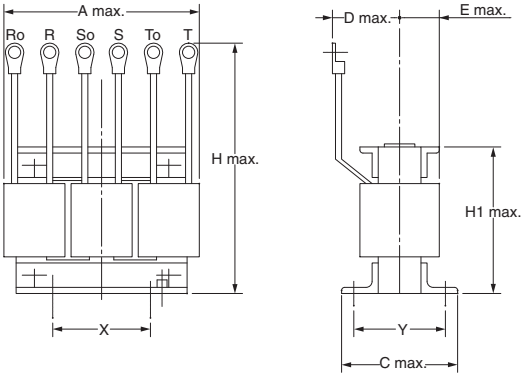

PG Board 3G3AX-PG01

The PG Board (3G3AX-PG01) is an optional board for the 3G3RX Series Inverter. With this board, you can realize highly accurate system operation with minimum speed fluctuation, and position control via pulse train position command input by detecting the rotation speed of the motor with an encoder and using the data for feedback.

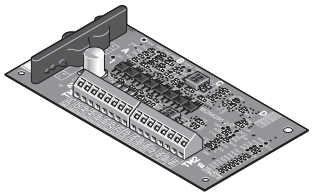

Connection Example

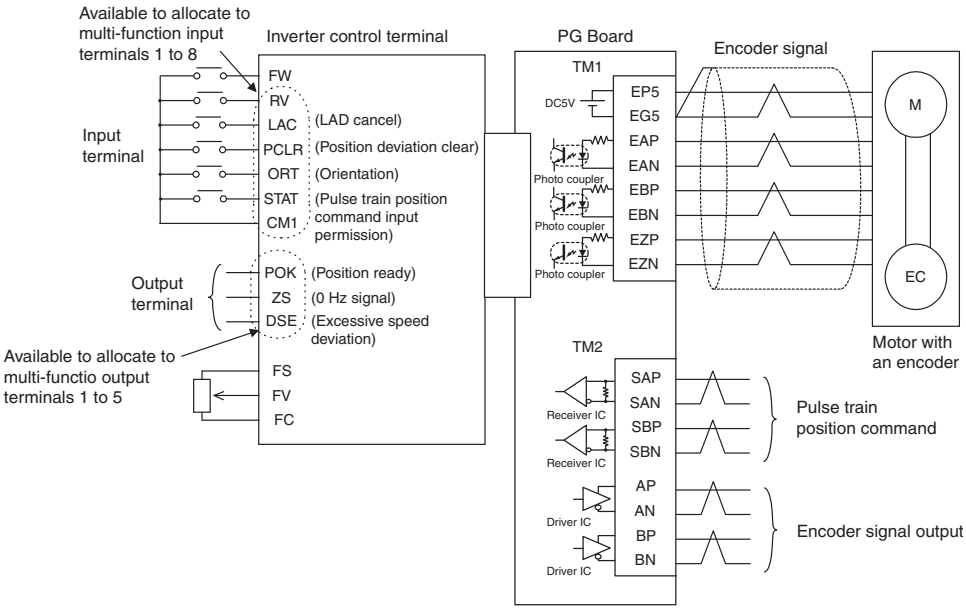

Note: For the terminal connection on the Inverter, refer to the Inverter RX series V1 type User's Manual (Man.No. I578).

Specifications

Item		Specifications
Speed control	**Encoder feedback**	Standard number of encoder pulses: 1024 pulses/r Maximum input number of pulses: 100k pulses/s
	Speed control system	Proportional integral (PI)/ Proportional (P) control
Position control	**Position command**	• The pulse train can be input in three modes. Mode 0: Pulse train with 90° phase difference Mode 1: Forward/Reverse command + Pulse train Mode 2: Forward pulse train + Reverse pulse train The input mode depends on the Inverter setting. • Maximum input number of pulses: 100k pulses/s
	Electronic gear	• Pulse ratio A/B (A, B: 1 to 9999 can be set) • Available setting range: 1/50 ≤ A/B ≤ 20
Orientation	**Stop position**	• 4096 divisions per one motor rotation *
	Speed	• Orientation speed and rotation direction settings available
Protective functions		• Encoder cable disconnection protection • Overspeed protection (Overspeed error detection level (P026)) • Positioning error • 3G3AX-PG connection error

* The inverter setting or external input is available.

Digital Operator

Used to set parameters, perform various monitoring, and start and stop the Inverter.

3G3AX-OP01

Dimensions

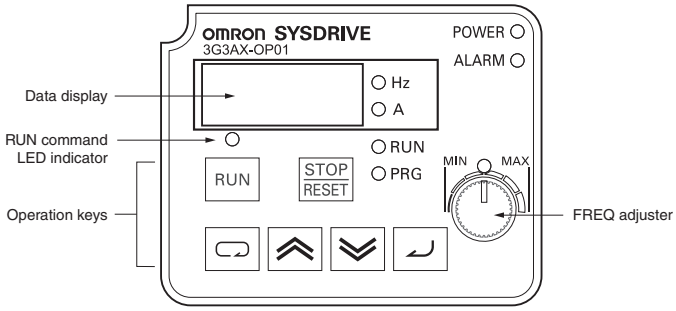

Dimensions	Height (55 mm) × Width (70 mm) × Depth (10 mm)

Digital operator extension cable 3G3AX-OPCN□

Used to install the Digital Operator away from the Inverter.

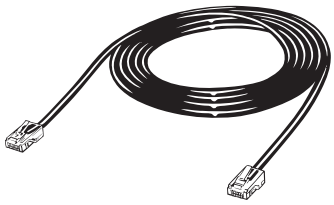

3G3AX-OPCN1 (Cable length: 1 m)
3G3AX-OPCN3 (Cable length: 3 m)

Ordering Information

■System Configuration.....28
■Interpreting Model Numbers 29
■Ordering Information
RX series V1 type Inverter Models 29
Communication Unit 30
Related Options 30
Recommended EtherCAT Communications Cables 37
Software.....38
Communications Cable.....38
■Overview of Inverter Selection 39
■Related Manuals 43
■Other Products in the Inverter Series 43

Sysmac® is a trademark or registered trademark of OMRON Corporation in Japan and other countries for OMRON factory automation products.
Windows is registered trademarks of Microsoft Corporation in the USA and other countries.
EtherCAT® is a registered trademark and patented technology, licensed by Beckhoff Automation GmbH, Germany.
CompoNet™, DeviceNet™ and CIP Safety™ on EtherNet/IP are the trademarks of ODVA.
Other company names and product names in this document are the trademarks or registered trademarks of their respective companies.

High-function General-purpose Inverters RX-Series V1 type

System Configuration

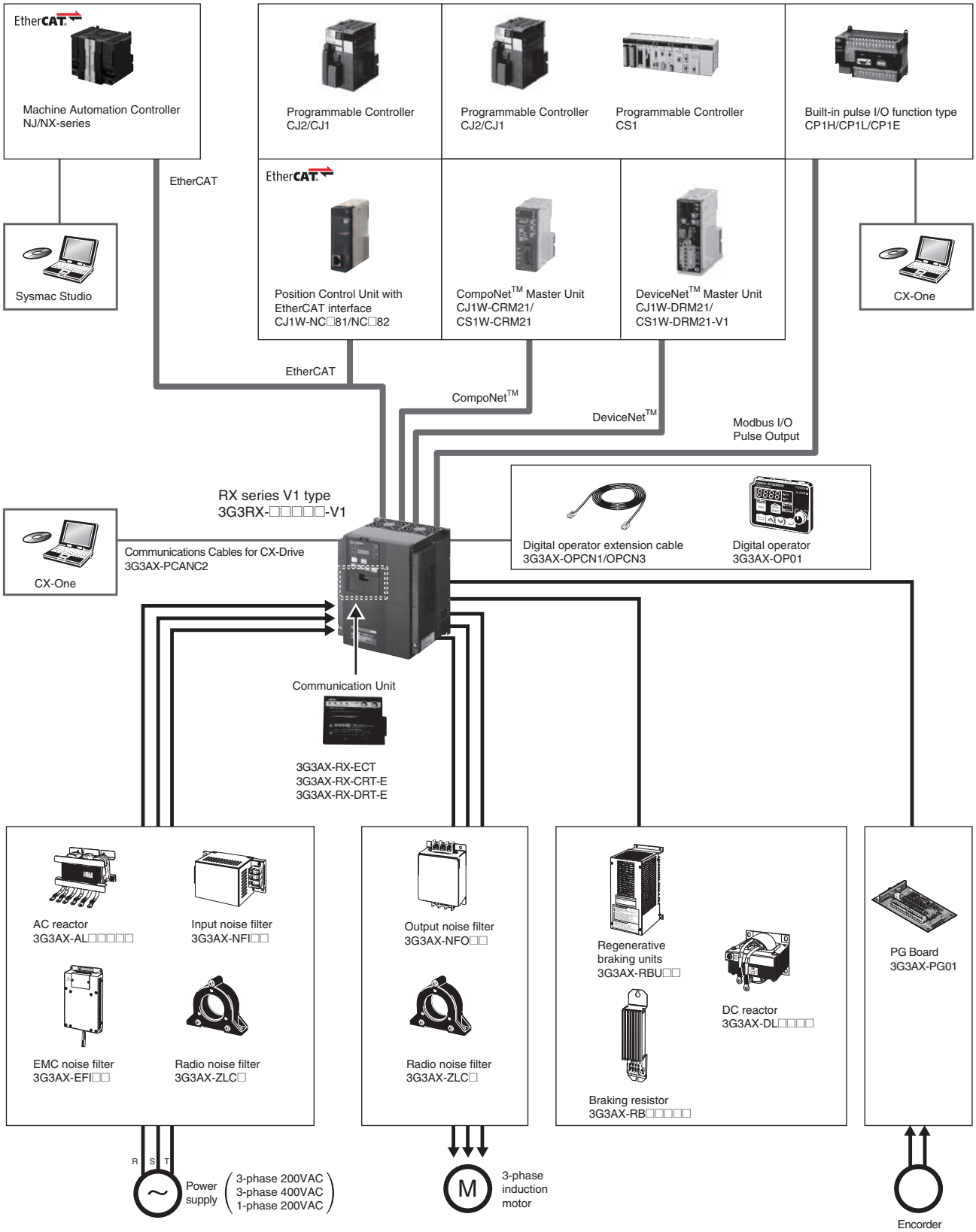

Interpreting Model Numbers

3G3RX-□□□□□-V1

RX series
V1 type

Maximum Applicable Motor Capacity (CT:Heavy load)

004	0.4 kW	055	5.5 kW	220	22 kW	750	75 kW
007	0.75 kW	075	7.5 kW	300	30 kW	900	90 kW
015	1.5 kW	110	11 kW	370	37 kW	11k	110 kW
022	2.2 kW	150	15 kW	450	45 kW	13k	132 kW
037	3.7 kW	185	18.5 kW	550	55 kW		

Voltage Class

2	3-phase 200 V AC (200-V class)
4	3-phase 400 V AC (400-V class)

Enclosure rating

A	Panel-mounting (IP20 min.) or closed wall-mounting models
B	Panel-mounting (IP00 min.)

Ordering Information

RX series V1 type Inverter Models

Rated voltage	Enclosure ratings	Max. applicable motor capacity		Model
		CT: Heavy load	VT: Light load	
3-phase 200 VAC	IP20	0.4 kW	0.75 kW	**3G3RX-A2004-V1**
		0.75 kW	1.5 kW	**3G3RX-A2007-V1**
		1.5 kW	2.2 kW	**3G3RX-A2015-V1**
		2.2 kW	3.7 kW	**3G3RX-A2022-V1**
		3.7 kW	5.5 kW	**3G3RX-A2037-V1**
		5.5 kW	7.5 kW	**3G3RX-A2055-V1**
		7.5 kW	11 kW	**3G3RX-A2075-V1**
		11 kW	15 kW	**3G3RX-A2110-V1**
		15 kW	18.5 kW	**3G3RX-A2150-V1**
		18.5 kW	22 kW	**3G3RX-A2185-V1**
		22 kW	30 kW	**3G3RX-A2220-V1**
		30 kW	37 kW	**3G3RX-A2300-V1**
		37 kW	45 kW	**3G3RX-A2370-V1**
		45 kW	55 kW	**3G3RX-A2450-V1**
		55 kW	75 kW	**3G3RX-A2550-V1**
3-phase 400 VAC		0.4 kW	0.75 kW	**3G3RX-A4004-V1**
		0.75 kW	1.5 kW	**3G3RX-A4007-V1**
		1.5 kW	2.2 kW	**3G3RX-A4015-V1**
		2.2 kW	3.7 kW	**3G3RX-A4022-V1**
		3.7 kW	5.5 kW	**3G3RX-A4037-V1**
		5.5 kW	7.5 kW	**3G3RX-A4055-V1**
		7.5 kW	11 kW	**3G3RX-A4075-V1**
		11 kW	15 kW	**3G3RX-A4110-V1**
		15 kW	18.5 kW	**3G3RX-A4150-V1**
		18.5 kW	22 kW	**3G3RX-A4185-V1**
		22 kW	30 kW	**3G3RX-A4220-V1**
		30 kW	37 kW	**3G3RX-A4300-V1**
		37 kW	45 kW	**3G3RX-A4370-V1**
		45 kW	55 kW	**3G3RX-A4450-V1**
		55 kW	75 kW	**3G3RX-A4550-V1**
	IP00	75 kW	90 kW	**3G3RX-B4750-V1**
		90 kW	110 kW	**3G3RX-B4900-V1**
		110 kW	132 kW	**3G3RX-B411K-V1**
		132 kW	160 kW	**3G3RX-B413K-V1**

Communication Unit

Name	Model
EtherCAT Communication Unit	**3G3AX-RX-ECT**
CompoNet™ Communication Unit	**3G3AX-RX-CRT-E**
DeviceNet™ Communication Unit	**3G3AX-RX-DRT-E**

Related Options

Name	Specifications		Model
Regenerative Braking Units	3-phase 200 VAC	General purpose with Braking resistor	**3G3AX-RBU21**
		High Regeneration purpose with Braking resistor	**3G3AX-RBU22**
		General purpose for 30 kW *	**3G3AX-RBU23**
		General purpose for 55 kW *	**3G3AX-RBU24**
	3-phase 400 VAC	General purpose with Braking resistor	**3G3AX-RBU41**
		General purpose for 30 kW *	**3G3AX-RBU42**
		General purpose for 55 kW *	**3G3AX-RBU43**
Braking Resistor	Compact type	Resistor 120 W, 180 Ω	**3G3AX-RBA1201**
		Resistor 120 W, 100 Ω	**3G3AX-RBA1202**
		Resistor 120 W, 50 Ω	**3G3AX-RBA1203**
		Resistor 120 W, 35 Ω	**3G3AX-RBA1204**
	Standard type	Resistor 200 W, 180 Ω	**3G3AX-RBB2001**
		Resistor 200 W, 100 Ω	**3G3AX-RBB2002**
		Resistor 300 W, 50 Ω	**3G3AX-RBB3001**
		Resistor 400 W, 35 Ω	**3G3AX-RBB4001**
	Medium capacity type	Resistor 400 W, 50 Ω	**3G3AX-RBC4001**
		Resistor 600 W, 35 Ω	**3G3AX-RBC6001**
		Resistor 1200 W, 17 Ω	**3G3AX-RBC12001**

* The braking resistor is optionally required.

Regenerative Braking Unit and Braking Resistor Combination

Select the combination of the regenerative braking unit(s) and the braking resistor(s) as follows, according to your inverter. If the usage rate exceeds 10% ED, or if you need a torque larger than the approximate braking torque, you need to follow the instruction provided in Braking Resistor Selection.

- Inverter: Select the model of your inverter. However, the table below assumes that your inverter is used in the heavy load mode and connected to a single motor with the same capacity. Therefore, in the light load mode, a motor with the same capacity means a motor that is one size larger in capacity than the inverter and the converted braking torque decreases accordingly.
- Operating conditions: Show the torque during deceleration and the deceleration time (in % ED) calculated as a percentage of the cycle time for 1 cycle of operation including the stop time.
- Braking unit/Breaking resistor: Show the required the model and number of units.
- Connection form: Show the configuration of the regenerative braking unit(s) and braking resistor(s) illustrated in the connection form table below.
- Restrictions: Show the maximum deceleration time allowable for the combination shown here and the minimum resistance that can be connected to the inverter's built-in regenerative braking circuit or external regenerative braking unit(s).

Inverter			Operating conditions		Braking unit		Braking resistor		Connec-tion form	Restrictions	
Voltage class	Max. applicable motor capacity (kW)	Model	%ED (%)	Approximate braking torque (%)	Model	Number of units	Model	Number of units		Allowable continuous braking time(s)	Min. connectable resistance (Ω)
200-V Class	0.4	3G3RX-A2004-V1	3.0%	220%	Built-in Inverter	---	3G3AX-RBA1201	1	1	20	50
			10.0%	220%		---	3G3AX-RBB2001	1	1	30	50
	0.75	3G3RX-A2007-V1	3.0%	120%	Built-in Inverter	---	3G3AX-RBA1201	1	1	20	50
			10.0%	120%		---	3G3AX-RBB2001	1	1	30	50
	1.5	3G3RX-A2015-V1	2.5%	110%	Built-in Inverter	---	3G3AX-RBA1202	1	1	12	35
			10.0%	215%		---	3G3AX-RBC4001	1	1	10	35
	2.2	3G3RX-A2022-V1	3.0%	150%	Built-in Inverter	---	3G3AX-RBB3001	1	1	30	35
			10.0%	150%		---	3G3AX-RBC4001	1	1	10	35
	3.7	3G3RX-A2037-V1	3.0%	125%	Built-in Inverter	---	3G3AX-RBB4001	1	1	20	35
			10.0%	125%		---	3G3AX-RBC6001	1	1	10	35
	5.5	3G3RX-A2055-V1	3.0%	120%	Built-in Inverter	---	3G3AX-RBB3001	2	2	30	16
			10.0%	120%		---	3G3AX-RBC4001	2	2	10	16
	7.5	3G3RX-A2075-V1	3.0%	125%	Built-in Inverter	---	3G3AX-RBB4001	2	2	20	10
			10.0%	125%		---	3G3AX-RBC6001	2	2	10	10
	11	3G3RX-A2110-V1	3.0%	125%	Built-in Inverter	---	3G3AX-RBB4001	3	4	20	10
			10.0%	125%		---	3G3AX-RBC6001	3	4	10	10
	15	3G3RX-A2150-V1	3.0%	130%	Built-in Inverter	---	3G3AX-RBC12001	2	2	10	7.5
			10.0%	130%		---	3G3AX-RBC12001	2	2	10	7.5
	18.5	3G3RX-A2185-V1	3.0%	105%	Built-in Inverter	---	3G3AX-RBC12001	2	2	10	7.5
			10.0%	105%		---	3G3AX-RBC12001	2	2	10	7.5
	22	3G3RX-A2220-V1	3.0%	130%	Built-in Inverter	---	3G3AX-RBC12001	3	4	10	5
			10.0%	130%		---	3G3AX-RBC12001	3	4	10	5
	30	3G3RX-A2300-V1	3.0%	160%	3G3AX-RBU24	1	3G3AX-RBC12001	5	11	10	2
			10.0%	160%	3G3AX-RBU24	1	3G3AX-RBC12001	5	11	10	2
	37	3G3RX-A2370-V1	3.0%	130%	3G3AX-RBU24	1	3G3AX-RBC12001	5	11	10	2
			10.0%	130%	3G3AX-RBU24	1	3G3AX-RBC12001	5	11	10	2
	45	3G3RX-A2450-V1	3.0%	130%	3G3AX-RBU24	1	3G3AX-RBC12001	6	12	10	2
			10.0%	130%	3G3AX-RBU24	1	3G3AX-RBC12001	6	12	10	2
	55	3G3RX-A2550-V1	3.0%	120%	3G3AX-RBU24	1	3G3AX-RBC12001	7	13	10	2
			10.0%	120%	3G3AX-RBU24	1	3G3AX-RBC12001	7	13	10	2

Inverter			Operating conditions		Braking unit		Braking resistor			Restrictions	
Voltage class	Max. applicable motor capacity (kW)	Model	%ED (%)	Approximate braking torque (%)	Model	Number of units	Model	Number of units	Connec-tion form	Allowable continuous braking time(s)	Min. connectable resistance (Ω)
400-V Class	0.4	3G3RX-A4004-V1	3.0%	220%	Built-in Inverter	---	3G3AX-RBA1201	2	3	20	100
			10.0%	220%		---	3G3AX-RBB2001	2	3	30	100
	0.75	3G3RX-A4007-V1	3.0%	220%	Built-in Inverter	---	3G3AX-RBA1201	2	3	20	100
			10.0%	220%		---	3G3AX-RBB2001	2	3	30	100
	1.5	3G3RX-A4015-V1	3.0%	120%	Built-in Inverter	---	3G3AX-RBA1201	2	3	20	100
			10.0%	120%		---	3G3AX-RBB2001	2	3	30	100
	2.2	3G3RX-A4022-V1	2.5%	150%	Built-in Inverter	---	3G3AX-RBA1202	2	3	12	100
			10.0%	220%		---	3G3AX-RBC4001	2	3	10	100
	3.7	3G3RX-A4037-V1	3.0%	175%	Built-in Inverter	---	3G3AX-RBB3001	2	3	30	70
			10.0%	175%		---	3G3AX-RBC4001	2	3	10	70
	5.5	3G3RX-A4055-V1	3.0%	120%	Built-in Inverter	---	3G3AX-RBB3001	2	3	30	70
			10.0%	120%		---	3G3AX-RBC4001	2	3	10	70
	7.5	3G3RX-A4075-V1	3.0%	125%	Built-in Inverter	---	3G3AX-RBB4001	2	3	20	35
			10.0%	125%		---	3G3AX-RBC6001	2	3	10	35
	11	3G3RX-A4110-V1	3.0%	120%	Built-in Inverter	---	3G3AX-RBB3001	4	5	30	35
			10.0%	120%		---	3G3AX-RBC4001	4	5	10	35
	15	3G3RX-A4150-V1	3.0%	125%	Built-in Inverter	---	3G3AX-RBB4001	4	5	20	24
			10.0%	125%		---	3G3AX-RBC6001	4	5	10	24
	18.5	3G3RX-A4185-V1	3.0%	140%	Built-in Inverter	---	3G3AX-RBB3001	8	6	30	24
			10.0%	140%		---	3G3AX-RBC4001	8	6	10	24
	22	3G3RX-A4220-V1	3.0%	120%	Built-in Inverter	---	3G3AX-RBB3001	8	6	30	20
			10.0%	120%		---	3G3AX-RBC4001	8	6	10	20
	30	3G3RX-A4300-V1	3.0%	130%	3G3AX-RBU42	1	3G3AX-RBC12001	4	8	10	10
			10.0%	130%	3G3AX-RBU42	1	3G3AX-RBC12001	4	8	10	10
	37	3G3RX-A4370-V1	3.0%	155%	3G3AX-RBU43	1	3G3AX-RBC12001	6	9	10	6
			10.0%	155%	3G3AX-RBU43	1	3G3AX-RBC12001	6	9	10	6
	45	3G3RX-A4450-V1	3.0%	130%	3G3AX-RBU43	1	3G3AX-RBC12001	6	9	10	6
			10.0%	130%	3G3AX-RBU43	1	3G3AX-RBC12001	6	9	10	6
	55	3G3RX-A4550-V1	3.0%	140%	3G3AX-RBU43	1	3G3AX-RBC12001	8	10	10	6
			10.0%	140%	3G3AX-RBU43	1	3G3AX-RBC12001	8	10	10	6
	75	3G3RX-A4750-V1	3.0%	130%	3G3AX-RBU43	1	3G3AX-RBC12001	10	14	10	6
			10.0%	130%	3G3AX-RBU43	1	3G3AX-RBC12001	10	14	10	6
	90	3G3RX-A4900-V1	3.0%	105%	3G3AX-RBU43	1	3G3AX-RBC12001	10	14	10	6
			10.0%	105%	3G3AX-RBU43	1	3G3AX-RBC12001	10	14	10	6
	110	3G3RX-A411K-V1	3.0%	105%	3G3AX-RBU43	2	3G3AX-RBC12001	12	15	10	6
			10.0%	105%	3G3AX-RBU43	2	3G3AX-RBC12001	12	15	10	6
	132	3G3RX-A413K-V1	3.0%	115%	3G3AX-RBU43	2	3G3AX-RBC12001	16	16	10	6
			10.0%	115%	3G3AX-RBU43	2	3G3AX-RBC12001	16	16	10	6

Connection configuration

TYPE		
1	1 resistor unit	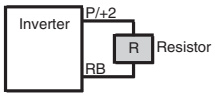
2	2 resistor units connected in parallel	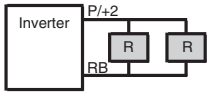
3	2 resistor units connected in series	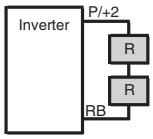
4	3 resistor units connected in parallel	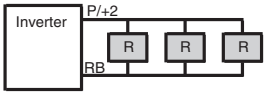
5	2 groups of 2 parallel resistor units are connected in series	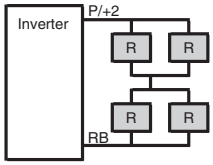
6	2 groups of 4 parallel resistor units are connected in series	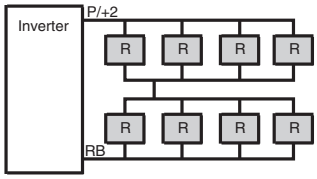

TYPE		
7	1 breaking unit and 3 resistor units connected in parallel	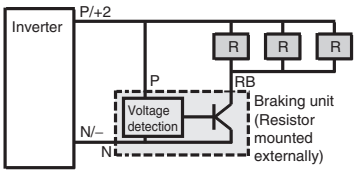
8	1 breaking unit and 2 groups of 2 parallel resistor units are connected in series	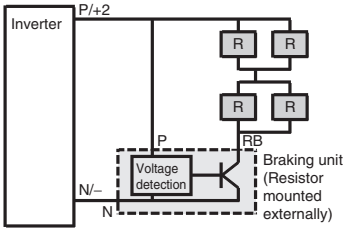
9	1 breaking unit and 2 groups of 3 parallel resistor units are connected in series	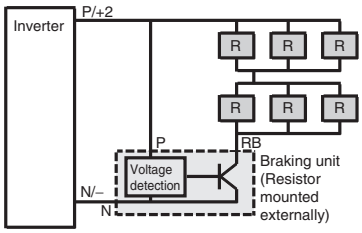
10	1 breaking unit and 2 groups of 4 parallel resistor units connected are connected in series	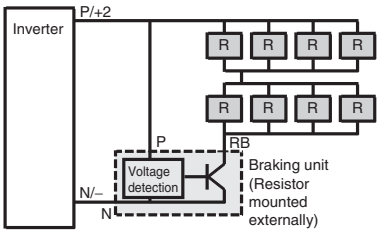

11	1 breaking unit and 5 resistor units connected in parallel	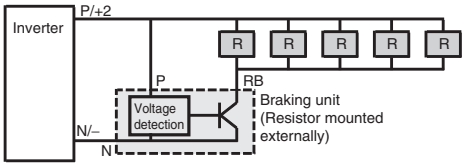
12	1 breaking unit and 6 resistor units connected in parallel	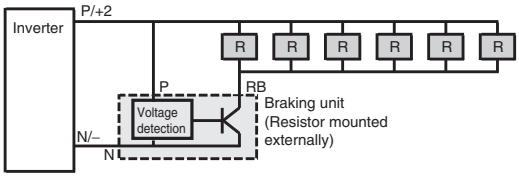
13	1 breaking unit and 7 resistor unitsconnected in parallel	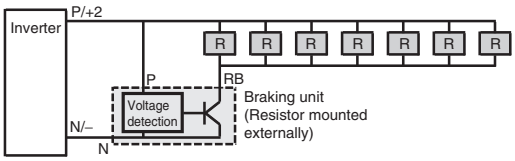

14	**1 breaking unit and 2 groups of 5 parallel resistor units are connected in series**	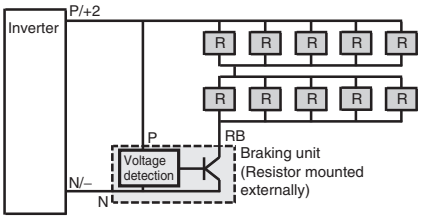
15	**2 breaking units and 2 groups of 3 parallel resistor units are each connected in series**	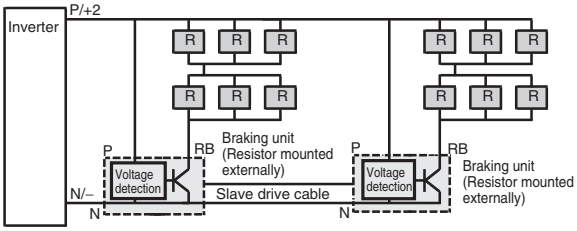
16	**2 breaking units and 2 groups of 4 parallel resistor units are each connected in series**	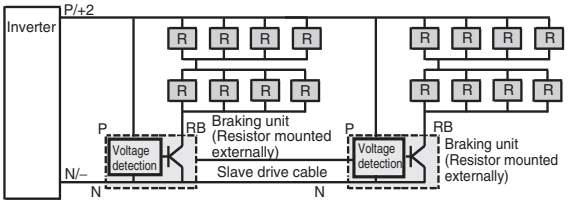

Name	Model
Radio Noise Filter	**3G3AX-ZCL2**
	3G3AX-ZCL1

Name	Specifications of Inverter			Model
	Voltage class	CT: Heavy load (kW)	VT: Light load (kW)	
Input Noise Filter	3-phase 200 VAC	0.4 to 0.75	0.75	**3G3AX-NFI21**
		1.5	1.5	**3G3AX-NFI22**
		2.2, 3.7	2.2, 3.7	**3G3AX-NFI23**
		5.5	5.5	**3G3AX-NFI24**
		7.5	7.5	**3G3AX-NFI25**
		11	11	**3G3AX-NFI26**
		15	15	**3G3AX-NFI27**
		18.5	18.5	**3G3AX-NFI28**
		22, 30	22, 30	**3G3AX-NFI29**
		37	37	**3G3AX-NFI2A**
		45	45	**3G3AX-NFI2B**
		55	55	**3G3AX-NFI2C**
	3-phase 400 VAC	0.4 to 2.2	0.75 to 2.2	**3G3AX-NFI41**
		3.7	3.7	**3G3AX-NFI42**
		5.5, 7.5	5.5, 7.5	**3G3AX-NFI43**
		11	11	**3G3AX-NFI44**
		15	15	**3G3AX-NFI45**
		18.5	18.5	**3G3AX-NFI46**
		22	22	**3G3AX-NFI47**
		30	30	**3G3AX-NFI48**
		37	37	**3G3AX-NFI49**
		45, 55	45, 55	**3G3AX-NFI4A**
EMC Noise Filter *	3-phase 200 VAC	0.4 to 7.5	0.75	**3G3AX-EFI41**
		1.5	1.5	**3G3AX-EFI42**
		2.2, 3.7	2.2, 3.7	**3G3AX-EFI43**
		5.5	5.5	**3G3AX-EFI44**
		7.5	7.5	**3G3AX-EFI45**
		11	11	**3G3AX-EFI47**
		15	15	**3G3AX-EFI48**
		18.5	18.5	**3G3AX-EFI49**
		22, 30	22, 30	**3G3AX-EFI4A**
		37	37	**3G3AX-EFI4B**
	3-phase 400 VAC	0.4 to 22	0.75 to 2.2	**3G3AX-EFI41**
		3.7	3.7	**3G3AX-EFI42**
		5.5, 7.5	5.5, 7.5	**3G3AX-EFI43**
		11	11	**3G3AX-EFI44**
		15	15	**3G3AX-EFI45**
		18.5	18.5	**3G3AX-EFI46**
		22	22	**3G3AX-EFI47**
		30	30	**3G3AX-EFI48**
		37	37	**3G3AX-EFI49**
		45, 55	45, 55	**3G3AX-EFI4A**
		75, 90	75, 90	**3G3AX-EFI4B**

* Although an EMC Noise Filter is built into the RX, it may be necessary to provide another EMC Noise Filter when the cable between the Motor and the Inverter is long.

Name	Specifications of Inverter			Model
	Voltage class	CT: Heavy load (kW)	VT: Light load (kW)	
Output Noise Filter	3-phase 200 VAC/ 3-phase 400 VAC	Applicable motor 200 V class: 0.4 to 0.75 400 V class: 0.4 to 2.2	Applicable motor 200 V class: 0.75 400 V class: 0.75 to 2.2	**3G3AX-NFO01**
		Applicable motor 200 V class: 1.5, 2.2 400 V class: 3.7	Applicable motor 200 V class: 1.5, 2.2 400 V class: 3.7	**3G3AX-NFO02**
		Applicable motor 200 V class: 3.7, 5.5 400 V class: 5.5 to 11	Applicable motor 200 V class: 3.7, 5.5 400 V class: 5.5 to 11	**3G3AX-NFO03**
		Applicable motor 200 V class: 7.5, 11 400 V class: 15 to 22	Applicable motor 200 V class: 7.5, 11 400 V class: 15 to 22	**3G3AX-NFO04**
		Applicable motor 200 V class: 15 400 V class: 30, 37	Applicable motor 200 V class: 15 400 V class: 30, 37	**3G3AX-NFO05**
		Applicable motor 200 V class: 18.5, 22 400 V class: 45	Applicable motor 200 V class: 18.5, 22 400 V class: 45	**3G3AX-NFO06**
		Applicable motor 200 V class: 30, 37 400 V class: 55, 75	Applicable motor 200 V class: 30, 37 400 V class: 55, 75	**3G3AX-NFO07**
DC Reactor	3-phase 200 VAC	0.4	---	**3G3AX-DL2004**
		0.75	0.75	**3G3AX-DL2007**
		1.5	1.5	**3G3AX-DL2015**
		2.2	2.2	**3G3AX-DL2022**
		3.7	3.7	**3G3AX-DL2037**
		5.5	5.5	**3G3AX-DL2055**
		7.5	7.5	**3G3AX-DL2075**
		11	11	**3G3AX-DL2110**
		15	15	**3G3AX-DL2150**
		18.5, 22	18.5, 22	**3G3AX-DL2220**
		30	30	**3G3AX-DL2300**
		37	37	**3G3AX-DL2370**
		45	45	**3G3AX-DL2450**
		55	55	**3G3AX-DL2550**
	3-phase 400 VAC	0.4	---	**3G3AX-DL4004**
		0.75	0.75	**3G3AX-DL4007**
		1.5	1.5	**3G3AX-DL4015**
		2.2	2.2	**3G3AX-DL4022**
		3.7	3.7	**3G3AX-DL4037**
		5.5	5.5	**3G3AX-DL4055**
		7.5	7.5	**3G3AX-DL4075**
		11	11	**3G3AX-DL4110**
		15	15	**3G3AX-DL4150**
		18.5, 22	18.5, 22	**3G3AX-DL4220**
		30	30	**3G3AX-DL4300**
		37	37	**3G3AX-DL4370**
		45	45	**3G3AX-DL4450**
		55	55	**3G3AX-DL4550**
AC Reactor	3-phase 200 VAC	0.4 to 1.5	0.75 to 1.5	**3G3AX-AL2025**
		2,2, 3.7	2.2, 3.7	**3G3AX-AL2055**
		5.5, 7.5	5.5, 7.5	**3G3AX-AL2110**
		11, 15	11, 15	**3G3AX-AL2220**
		18.5, 22	18.5, 22	**3G3AX-AL2330**
		30, 37	30, 37	**3G3AX-AL2500**
		45, 55	45, 55	**3G3AX-AL2750**
	3-phase 400 VAC	0.4 to 1.5	0.75 to 1.5	**3G3AX-AL4025**
		2.2, 3.7	2.2, 3.7	**3G3AX-AL4055**
		5.5, 7.5	5.5, 7.5	**3G3AX-AL4110**
		11, 15	11, 15	**3G3AX-AL4220**
		18.5, 22	18.5, 22	**3G3AX-AL4330**
		30, 37	30, 37	**3G3AX-AL4500**
		45, 55	45, 55	**3G3AX-AL4750**

Name	Specifications	Model
PG Board	For Position or Frequency Control	**3G3AX-PG01**
Digital Operator	---	**3G3AX-OP01**
Digital Operator Connecting Cable	Cable Length 1 m	**3G3AX-OPCN1**
	Cable Length 3 m	**3G3AX-OPCN3**

Recommended EtherCAT Communications Cables

Use Straight STP (shielded twisted-pair) cable of category 5 or higher with double shielding (braiding and aluminum foil tape) for EtherCAT.

Cabel with Connectors

Item	Appearance	Recommended manufacturer	Cable length (m)	Model
Standard type Cable with Connectors on Both Ends (RJ45/RJ45) Wire Gauge and Number of Pairs: AWG27, 4-pair Cable Cable Sheath material: LSZH *2 Cable color: Yellow *3		OMRON	0.3	**XS6W-6LSZH8SS30CM-Y**
			0.5	**XS6W-6LSZH8SS50CM-Y**
			1	**XS6W-6LSZH8SS100CM-Y**
			2	**XS6W-6LSZH8SS200CM-Y**
			3	**XS6W-6LSZH8SS300CM-Y**
			5	**XS6W-6LSZH8SS500CM-Y**
Rugged type Cable with Connectors on Both Ends (RJ45/RJ45) Wire Gauge and Number of Pairs: AWG22, 2-pair Cable		OMRON	0.3	**XS5W-T421-AMD-K**
			0.5	**XS5W-T421-BMD-K**
			1	**XS5W-T421-CMD-K**
			2	**XS5W-T421-DMD-K**
			5	**XS5W-T421-GMD-K**
			10	**XS5W-T421-JMD-K**
Rugged type Cable with Connectors on Both Ends (M12 Straight/RJ45) Wire Gauge and Number of Pairs: AWG22, 2-pair Cable		OMRON	0.3	**XS5W-T421-AMC-K**
			0.5	**XS5W-T421-BMC-K**
			1	**XS5W-T421-CMC-K**
			2	**XS5W-T421-DMC-K**
			5	**XS5W-T421-GMC-K**
			10	**XS5W-T421-JMC-K**
Rugged type Cable with Connectors on Both Ends (M12 Right-angle/RJ45) Wire Gauge and Number of Pairs: AWG22, 2-pair Cable		OMRON	0.3	**XS5W-T422-AMC-K**
			0.5	**XS5W-T422-BMC-K**
			1	**XS5W-T422-CMC-K**
			2	**XS5W-T422-DMC-K**
			5	**XS5W-T422-GMC-K**
			10	**XS5W-T422-JMC-K**

*1 Standard type cables length 0.2, 0.3, 0.5, 1, 1.5, 2, 3, 5, 7.5, 10, 15 and 20m are available.
Rugged type cables length 0.3, 0.5, 1, 2, 3, 5, 10 and 15m are available.
*2 The lineup features Low Smoke Zero Halogen cables for in-cabinet use and PUR cables for out-of-cabinet use.
*3 Cables colors are available in blue, yellow, or Green
Note: For details, refer to Cat.No.G019.

Cables / Connectors
Wire Gauge and Number of Pairs: AWG24, 4-pair Cable

Item	Appearance	Recommended manufacturer	Model
Cables	---	Hitachi Metals, Ltd.	**NETSTAR-C5E SAB 0.5 x 4P ***
	---	Kuramo Electric Co.	**KETH-SB ***
	---	SWCC Showa Cable Systems Co.	**FAE-5004 ***
RJ45 Connectors	---	Panduit Corporation	**MPS588-C ***

* We recommend you to use above cable and connector together.

Wire Gauge and Number of Pairs: AWG22, 2-pair Cable

Item	Appearance	Recommended manufacturer	Model
Cables	---	Kuramo Electric Co.	**KETH-PSB-OMR ***
	---	Nihon Electric Wire&Cable Co.,Ltd.	**PNET/B ***
RJ45 Assembly Connector		OMRON	**XS6G-T421-1 ***

* We recommend you to use above cable and connector together.
Note: Connect both ends of cable shielded wires to the connector hoods.

Software

How to Select Required Support Software for Your Controller

The required Support Software depends on the Controller to connect. Please check the following table when purchasing the Support Software.

Item	Omron PLC System	Omron Machine Automation Controller System
Controller	CS, CJ, CP, and other series	NJ/NX-series
Inverter	Inverter RX-series V1 tyep Inverter RX-series V1 tyep with CompoNet™ Communication Unit Inverter RX-series V1 tyep with DeviceNet™ Communication Unit	Inverter RX-series V1 tyep with EtherCAT Communication Unit
Software	FA Integrated Tool Package CX-One (CX-Drive: Version 2.72 or higher)	Automation Software Sysmac Studio (Version 1.03 or higher)

FA Integrated Tool Package CX-One

Product name	Specifications	Number of licenses	Media	Model
FA Integrated Tool Package CX-One Ver.4.□	The CX-One is a comprehensive software package that integrates Support Software for OMRON PLCs and components. CX-One runs on the following OS. Windows XP (Service Pack 3 or higher, 32-bit version) / Windows Vista (32-bit/64-bit version) / Windows 7 (32-bit/64-bit version) / Windows 8(32-bit/64-bit version)/ Windows 8.1(32-bit/64-bit version) CX-One Version 4.□ includes CX-Drive Ver.2.□. For details, refer to the CX-One catalog (Cat. No. R134)	1 license *	DVD	**CXONE-AL01D-V4**

* Multi licenses are available for the CX-One (3, 10, 30, or 50 licenses).

Automation Software Sysmac Studio

Please purchase a DVD and required number of licenses the first time you purchase the Sysmac Studio. DVDs and licenses are available individually. Each model of licenses does not include any DVD.

Product name	Specifications	Number of licenses	Media	Model
Sysmac Studio Standard Edition Ver.1.□□	The Sysmac Studio provides an integrated development environment to set up, program, debug, and maintain NJ/NX-series Controllers and other Machine Automation Controllers, as well as EtherCAT slaves. Sysmac Studio runs on the following OS. Windows XP (Service Pack 3 or higher, 32-bit version) / Windows Vista (32-bit version) / Windows 7 (32-bit/64-bit version) / Windows 8(32-bit/64-bit version)/ Windows 8.1(32-bit/64-bit version)/ Windows 10 (32-bit/64-bit version) The Sysmac Studio Standard Edition DVD includes Support Software to set up EtherNet/IP Units, DeviceNet™ slaves, Serial Communications Units, and Support Software for creating screens on HMIs (CX-Designer). For details, refer to the Sysmac Integrated Catalogue (P072).	- (Media only)	DVD	**SYSMAC-SE200D**
		1 license *	---	**SYSMAC-SE201L**

* Multi licenses are available for the Sysmac Studio (3, 10, 30, or 50 licenses).

Communications Cable

Name	Specifications	Model
Communications cable for CX-Drive	USB Cable for JX and RX series (2m)	**3G3AX-PCACN2**

Overview of Inverter Selection

For detail of Inverter selection, refer to the RX series V1 type User's Manual. (Man.No.I578).

Motor Capacity Selection

Before selecting an invertor, first the motor should be chosen.In selecting the motor, first calculate the load inertia for the applications, and then calculate the required capacity and torque.

Make a simple selection (use Formulas for the required output power)

This method of calculation helps select a motor by calculating the output (W) required by the motor to maintain its regular rotations. It does not include calculation of the effect of acceleration/deceleration. Therefore, make allowance for the calculated value to select a motor. This calculation method can be applied to applications that operate constantly such as fans, conveyers, agitators etc.

This calculation method must not be applied to the following applications:

- Those requiring instant start-up.
- Those that frequently repeat operation and stop.
- Those that have a large inertia at the power transfer part.
- Those that have an inefficient power transfer part.

●For Straight-Line Operation: Normal Power PO (kW)

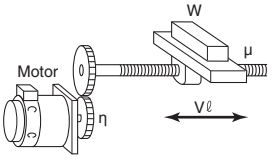

$$P_o = \frac{\mu \cdot W \cdot V\ell}{6120 \cdot \eta}$$

μ: Friction Coefficient
W: Mass of Straight-Line travelling part (kg)
Vℓ: Speed of Straight-Line Travelling part (m/min)
η: Decelerator (Transfer part) Efficiency

●For Rotating Operation: Normal Power PO (kW)

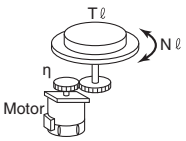

$$P_o\ (kW) = \frac{2\pi \cdot T\ell \cdot N\ell}{60 \cdot \eta} \times 10^{-3}$$

Tℓ : Load Torque (Load Shaft) (N·m)
Nℓ: Load Shaft Rotation Speed (r/min)
η: Transfer part (η≤1)

Detailed Selection Method (R.M.S Algorithm)

This method helps to select a motor by calculating the effective torque and maximum torque required to achieve a certain pattern of operation for the application. It selects a motor that is optimal for a particular operation pattern.

●Calculate the inertia with a Motor Shaft Conversion Value

Calculate inertias of all the components with the formula for inertia calculation shown below to convert them to a motor conversion value.

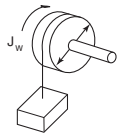

$$J_W = J_1 + J_2 = \left(\frac{M_1 \cdot D^2}{8} + \frac{M_2 \cdot D^2}{4}\right) \times 10^{-6} (kg \cdot m^2)$$

J_W : Inertia (kg·m²)
J_1 : Cylinder Inertia (kg·m²)
J_2 : Inertia from Object (kg·m²)
D : Diameter (mm)
M_1: Mass of Cylinder (kg)
M_2: Mass of Object (kg)

$$J_W = J_1 + J_2 + J_3 + J_4 = \left(\frac{M_1 \cdot D_1^2}{8} + \frac{M_2 \cdot D_2^2}{8} \cdot \frac{D_1^2}{D_2^2} + \frac{M_3 \cdot D_1^2}{4} + \frac{M_4 \cdot D_1^2}{4}\right) \times 10^{-6} (kg \cdot m^2)$$

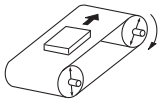

J_W: Inertia (kg·m²)
J_1 : Cylinder 1 Inertia (kg·m²)
J_2 : Inertia from Cylinder 2 (kg·m²)
J_3 : Inertia from Object (kg·m²)
J_4 : Inertia from Belt (kg·m²)
D_1 : Cylinder 1 Diameter (mm)
D_2 : Cylinder 2 Diameter (mm)
M_1: Mass of Cylinder 1 (kg)
M_2: Mass of Cylinder 2 (kg)
M_3: Mass of Object (kg)
M_4: Mass of Belt (kg)

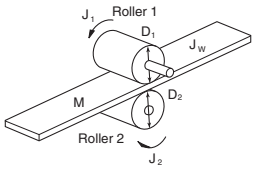

$$J_W = J_1 + \left(\frac{D_1}{D_2}\right)^2 J_2 + \frac{M \cdot D_1^2}{4} \times 10^{-6} (kg \cdot m^2)$$

J_W: System Inertia (kg·m²)
J_1 : Roller 1 Inertia (kg·m²)
J_2 : Roller 2 Inertia (kg·m²)
D_1 : Roller 1 Diameter (mm)
D_2 : Roller 2 Diameter (mm)
M : Work Equivalent Mass (kg)

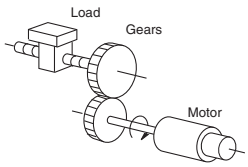

$$J_L = J_1 + G^2 (J_2 + J_W)\ (kg \cdot m^2)$$

J_L : Load Inertia of Motor Shaft Conversion (kg·m²)
J_W: Load Inertia (kg·m²)
J_1 : Gear Inertia on Motor Side (kg·m²)
J_2 : Gear Inertia on Load Side (kg·m²)
Z_1 : Number of Gear Teeth on Motor Side
Z_2 : Number of Gear Teeth on Load Side
Gear Ratio $G = Z_1/Z_2$

●Calculate Motor Shaft Conversion Torque and Effective Torque

Calculate the acceleration torque from the load torque calculated from both the motor shaft conversion value and the motor rotor inertia. Then Combine this acceleration torque and the Load torque calculated from the friction force and the external force that are applied to the load. Now you get the required torque to operate a motor.

Acceleration Torque

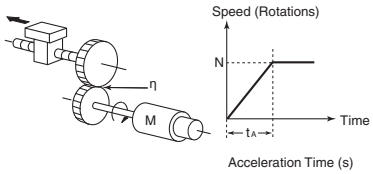

Acceleration Torque (T_A)

$$T_A = \frac{2\pi N}{60 t_A}\left(J_M + \frac{J_L}{\eta}\right) (N \cdot m)$$

T_A : Acceleration/Deceleration Torque (N·m)
J_L : Motor Shaft Conversion Load Inertia (kg·m²)
J_M : Inertial of Motor Itself (kg·m²)
η : Gear Transmission Efficiency
N : Motor Rotation Speed (r/min)

Motor Shaft Conversion Load Torque (External Force/Friction)

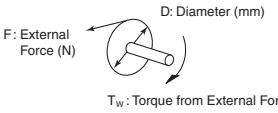

$$T_W = F \cdot \frac{D}{2} \times 10^{-3} (N \cdot m)$$

(Friction is generally,
F = μW μ: Friction Coefficient
W: Mass of Moving Part)

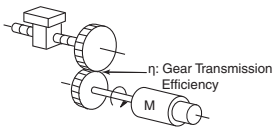

$$T_L = T_W \cdot \frac{G}{\eta}\ (N \cdot m)$$

T_1 : Motor Shaft Conversion Load Torque (N·m)
T_W: Load Torque (N·m)
Z_1: Number of Gear Teeth on Motor Side
Z_2: Number of Gear Teeth on Load Side
Gear (Deceleration) Ratio $G = Z_1/Z_2$

• Calculation of Total Torque and Effective Torque

Effective Torque: T_{RMS} (N·m)

$$= \sqrt{\frac{\Sigma (T_i)^2 \cdot t_i}{\Sigma t_i}} = \sqrt{\frac{T_1^2 \cdot t_1 + T_2^2 \cdot t_2 + T_3^2 \cdot t_3 + T_4^2 \cdot t_4}{t_1 + t_2 + t_3 + t_4}}$$

Maximum Torque: $T_{MAX} = T_1 = T_A + T_L$

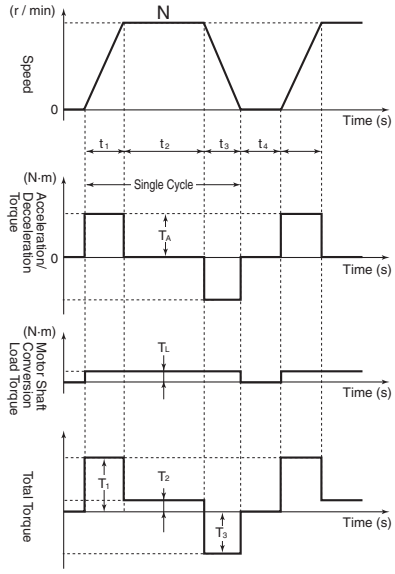

Note: Please make use of the Servo Motor selection software, which can calculate the motor shaft conversion inertia and effective/ maximum torque, as above.

●Motor Selection

Use the formula below to calculate the motor capacity from the effective torque and the maximum torque that were obtained above. Select the larger of the two generated values as the motor capacity. Select a motor the capacity of which is larger than the calculated value and makes allowance for an error.

• Motor Capacity corresponding to Effective Torque

Motor Capacity (kW) = $1.048 \cdot N \cdot T_{RMS} \cdot 10^{-4}$
N: Maximum Rotations (r/min)

• Motor Capacity capable of Providing Maximum Torque

Motor Capacity (kW) = $1.048 \cdot N \cdot T_{MAX} \cdot 10^{-4}/1.5$
N: Maximum Rotations (r/min)

Inverter Capacity Selection

Select an inverter that can be used for the selected motor in the process of "Motor Selection".
Generally, select an inverter which fits the maximum applicable motor capacity of the selected motor.
After selecting an inverter, check if it meets with all of the following conditions. If it does not, select an inverter that has a one class larger capacity and check the feasibility again.

Motor Rated Current ≤ Inverter Rated Output Current
Maximum Time of Continuous Torque Output Time in an Application ≤ 1 minute

Note: 1. Where the inverter overload capacity is "120% of Rated Output Current for 1 minute", check it for 0.8 minute.
2. Where a 0 Hz sensor-less vector control is being used, or where torque must be maintained for 0 (r/min) rotation speed and where 150% of the rated torque is frequently required, use an invertor which is one rank larger than the one selected by the above method.

Outline of Braking Resistor Selection

Importance of Braking Resistor

If the regenerative energy generated in deceleration or descent in an application is too great, the main circuit of an inverter may have an increased voltage and it may be damaged.
Because the inverter usually contains the overvoltage LAD stop function, it is not actually damaged. However, the motor stops detecting an error, making a stable and continuous operation disabled. Therefore, you must discharge the regenerative energy outside of the inverter.

● What is Regenerative Energy?

A load connected to a motor has kinetic energy when rotating, and potential energy when it is located in a high position. When the motor decelerates, or when the load descends, the energy is returned to an inverter. It is known as regeneration, and the energy generated by the phenomenon is known as regenerative energy.

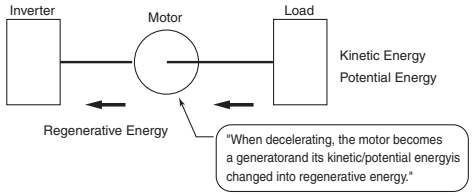

● Preventing Breaking Resistence

The following are methods to prevent the connection of braking resistance.
These methods will make the deceleration time increase, so check if it will not cause problems.

- Enable the deceleration stall prevention (enabled in factory settings) (It will automatically increase deceleration time not to cause an overvoltage to stop the motor).
- Set a longer deceleration time. (Cause the regenerative energy to decrease per unit of time.)
- Disable Free-Run. (Prevent the regenerative energy from returning to an inverter.)

Make a Simple Selection for Braking Resistors

It can be a simple selecting method by using the ratio of time in which regenerative energy is produced in a normal operating pattern.
Calculate the usage ratio from the following operating pattern.

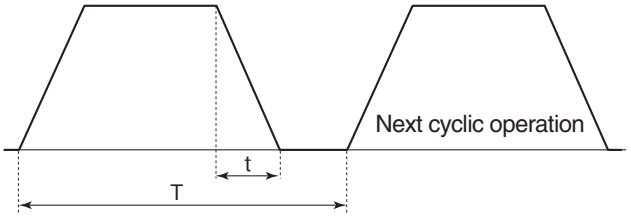

Usage Rate = t/T × 100 (% ED)

t : Deceleration Time (Regenerative Time)
T : Single Cycle Operation Time

%ED is the unit used for a usage rate.
The usage rate is used as the ratio of deceleration time (regenerative operation time) to simplify the selection of the braking options.

● For Models with a Built-in Braking Circuit (3G3RX Max. 22 kW)

Select the braking resistor based on the usage rate calculated from the operation patterns.
Refer to the braking resistor list described in the User's manual and catalog, and connect it according to your Inverter.

● For Models without a Built-in Braking Circuit (3G3RX Min. 30 kW)

Select the regenerative braking unit and the braking resistor.
Refer to the regenerative braking unit and braking resistor lists described in the User's manual and catalog, and connect them according to your Inverter.

When the usage ratio for the braking resistor selected on the previous page exceeds 10% ED, or when an extremely large braking torque is required, use the method below to calculate a regenerative energy and make your selection.

● Calculation of Required Braking Resistor

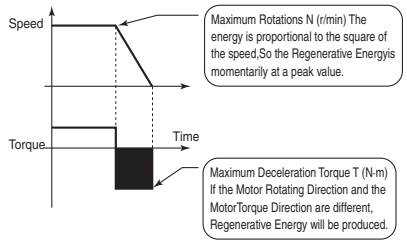

Breaking Resistance Resister: $R \leq \dfrac{V^2}{1.048 \times (T - 0.2 \times Tm) \times N \times 10^{-1}}$

V: 200V class inverter 385 (V)
400V class inverter 760 (V)
T: Maximum Braking Torque (N·m)
Tm: Motor Rated Torque (N·m)
N: Maximum Rotation Speed (r/min)

Note: Calculate a braking torque using the above "Motor Capacity Selection".

● Calculation of Average Regenerative Energy

Regenerative Energy is produced when the motor rotation direction and the torque direction are opposite.
Use the following formula to calculate a regenerative energy per cycle interval.

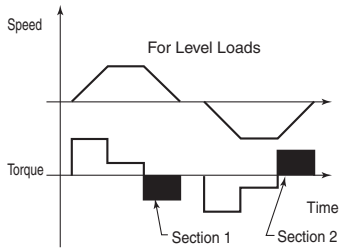

$P_i = N \times T \times t \times 1.048 \times 10^{-1}$
P_i : Sectional i Regenerative Energy (J)
N: Motor Rotation Speed (r/min)
When the number of Rotations changes
Take an average value
e.g. For Straight-Line Deceleration
(N max + N min)/2
T: Deceleration Torque (N/m)
t: Deceleration Time (s)

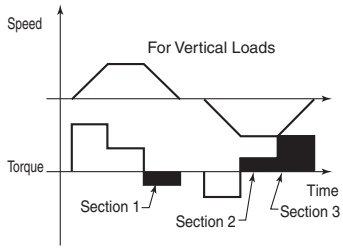

· Sum all of the Regenerative Energy in a cycle interval and divide it by the cycle time to calculate the time average, shown as below.

Average Regenerative Energy (W) = $\dfrac{(P1 + P2 + \cdots + Pi)\ (J)}{\text{Single Cycle Time (s)}}$

Note: 1. Forward rotation direction is forward for the speed, and the torque in the forward rotation direction is forward for the torque.
2. Calculate a braking torque using the above "Motor Capacity Selection".

● Braking Resistor Selection

Select a Braking Resistor from the required braking resistance and average regenerative energy on the left.

- Required Braking Resistence ≥ Resistence of Braking Resistor ≥ Minimum Connection Resistence of Invertor or Regenerative Braking Unit
- Average Regenerative Energy ≤ Permissible Power for Braking Resister

Note: 1. If a resistance that has a less then the minimum connectable value is connected on an inverter or regenerative braking resistor unit, the internal breaking transistor can be damaged. When the required braking resistance is less than the minimum connectable resistance, change the inverter or regenerative energy braking to the one having a larger capacity and a minimum connection resistance less than the required braking resistance.
2. Two or more regenerative braking units can be operated in parallel. Refer to the following formula to know the braking resistance value in such a case.
Braking Resistence(Ω) = (Required Braking Resistance as calculated above) × (No. of Units in use)
3. Do not use the above formula to select a generative braking resistance value. 150W does not reflect a permissible power capacity, but the maximum rated power per unit of resistance. The actual permissible power varies according to a resistance.

Related Manuals

Man.No.	Model	Manual
I578	3G3RX-□□□□□-V1	RX-V1 Series High-function General-purpose Inverter USER'S MANUAL
I560	3G3RX-□□□□□	RX Series High-function General-purpose Inverter USER'S MANUAL
I574	3G3AX-MX2-ECT 3G3AX-RX-ECT	MX2 series/RX series V1 type EtherCAT Communication Unit USER'S MANUAL
I581	3G3AX-MX2-DRT-E 3G3AX-RX-DRT-E	MX2 series/RX series V1 type DeviceNet™ Communication Unit USER'S MANUAL
I582	3G3AX-MX2-CRT-E 3G3AX-RX-CRT-E	MX2 series/RX series V1 type CompoNet™ Communication Unit USER'S MANUAL
I580	3G3RX-□□□□□-V1 CXONE-AL□□C/D-V□	CX-Drive Drive Programming USER'S MANUAL
W463	CXONE-AL□□C/D-V□	CX-One FA Integrated Tool Package SETUP MANUAL
W453	CXONE-AL□□C/D-V□ WS02-DRVC01	CX-Drive OPERATION MANUAL
W504	SYSMAC-SE□	Sysmac Studio Version 1 OPERATION MANUAL

READ AND UNDERSTAND THIS CATALOG

Please read and understand this catalog before purchasing the products. Please consult your OMRON representative if you have any questions or comments.

WARRANTY

OMRON's exclusive warranty is that the products are free from defects in materials and workmanship for a period of one year (or other period if specified) from date of sale by OMRON.

OMRON MAKES NO WARRANTY OR REPRESENTATION, EXPRESS OR IMPLIED, REGARDING NON-INFRINGEMENT, MERCHANTABILITY, OR FITNESS FOR PARTICULAR PURPOSE OF THE PRODUCTS. ANY BUYER OR USER ACKNOWLEDGES THAT THE BUYER OR USER ALONE HAS DETERMINED THAT THE PRODUCTS WILL SUITABLY MEET THE REQUIREMENTS OF THEIR INTENDED USE. OMRON DISCLAIMS ALL OTHER WARRANTIES, EXPRESS OR IMPLIED.

LIMITATIONS OF LIABILITY

OMRON SHALL NOT BE RESPONSIBLE FOR SPECIAL, INDIRECT, OR CONSEQUENTIAL DAMAGES, LOSS OF PROFITS OR COMMERCIAL LOSS IN ANY WAY CONNECTED WITH THE PRODUCTS, WHETHER SUCH CLAIM IS BASED ON CONTRACT, WARRANTY, NEGLIGENCE, OR STRICT LIABILITY.

In no event shall responsibility of OMRON for any act exceed the individual price of the product on which liability is asserted.

IN NO EVENT SHALL OMRON BE RESPONSIBLE FOR WARRANTY, REPAIR, OR OTHER CLAIMS REGARDING THE PRODUCTS UNLESS OMRON'S ANALYSIS CONFIRMS THAT THE PRODUCTS WERE PROPERLY HANDLED, STORED, INSTALLED, AND MAINTAINED AND NOT SUBJECT TO CONTAMINATION, ABUSE, MISUSE, OR INAPPROPRIATE MODIFICATION OR REPAIR.

SUITABILITY FOR USE

OMRON shall not be responsible for conformity with any standards, codes, or regulations that apply to the combination of products in the customer's application or use of the product.

At the customer's request, OMRON will provide applicable third party certification documents identifying ratings and limitations of use that apply to the products. This information by itself is not sufficient for a complete determination of the suitability of the products in combination with the end product, machine, system, or other application or use.

The following are some examples of applications for which particular attention must be given. This is not intended to be an exhaustive list of all possible uses of the products, nor is it intended to imply that the uses listed may be suitable for the products:

- Outdoor use, uses involving potential chemical contamination or electrical interference, or conditions or uses not described in this document.
- Nuclear energy control systems, combustion systems, railroad systems, aviation systems, medical equipment, amusement machines, vehicles, safety equipment, and installations subject to separate industry or government regulations.
- Systems, machines, and equipment that could present a risk to life or property.

Please know and observe all prohibitions of use applicable to the products.

NEVER USE THE PRODUCTS FOR AN APPLICATION INVOLVING SERIOUS RISK TO LIFE OR PROPERTY WITHOUT ENSURING THAT THE SYSTEM AS A WHOLE HAS BEEN DESIGNED TO ADDRESS THE RISKS, AND THAT THE OMRON PRODUCT IS PROPERLY RATED AND INSTALLED FOR THE INTENDED USE WITHIN THE OVERALL EQUIPMENT OR SYSTEM.

PERFORMANCE DATA

Performance data given in this document is provided as a guide for the user in determining suitability and does not constitute a warranty. It may represent the result of OMRON's test conditions, and the users must correlate it to actual application requirements. Actual performance is subject to the OMRON Warranty and Limitations of Liability.

CHANGE IN SPECIFICATIONS

Product specifications and accessories may be changed at any time based on improvements and other reasons.

It is our practice to change model numbers when published ratings or features are changed, or when significant construction changes are made. However, some specifications of the product may be changed without any notice. When in doubt, special model numbers may be assigned to fix or establish key specifications for your application on your request. Please consult with your OMRON representative at any time to confirm actual specifications of purchased products.

DIMENSIONS AND WEIGHTS

Dimensions and weights are nominal and are not to be used for manufacturing purposes, even when tolerances are shown.

ERRORS AND OMISSIONS

The information in this document has been carefully checked and is believed to be accurate; however, no responsibility is assumed for clerical, typographical, or proofreading errors, or omissions.

PROGRAMMABLE PRODUCTS

OMRON shall not be responsible for the user's programming of a programmable product, or any consequence thereof.

COPYRIGHT AND COPY PERMISSION

This document shall not be copied for sales or promotions without permission.

This document is protected by copyright and is intended solely for use in conjunction with the product. Please notify us before copying or reproducing this document in any manner, for any other purpose. If copying or transmitting this document to another, please copy or transmit it in its entirety.

Note: Do not use this document to operate the Unit.

OMRON Corporation **Industrial Automation Company**
Tokyo, JAPAN
Contact: www.ia.omron.com

Regional Headquarters

OMRON EUROPE B.V.
Wegalaan 67-69-2132 JD Hoofddorp
The Netherlands
Tel: (31)2356-81-300/Fax: (31)2356-81-388

OMRON ELECTRONICS LLC
One Commerce Drive Schaumburg,
IL 60173-5302 U.S.A.
Tel: (1) 847-843-7900/Fax: (1) 847-843-7787

OMRON ASIA PACIFIC PTE. LTD.
No. 438A Alexandra Road # 05-05/08 (Lobby 2),
Alexandra Technopark,
Singapore 119967
Tel: (65) 6835-3011/Fax: (65) 6835-2711

OMRON (CHINA) CO., LTD.
Room 2211, Bank of China Tower,
200 Yin Cheng Zhong Road,
PuDong New Area, Shanghai, 200120, China
Tel: (86) 21-5037-2222/Fax: (86) 21-5037-2200

Authorized Distributor:

© OMRON Corporation 2012 All Rights Reserved.
In the interest of product improvement,
specifications are subject to change without notice.

CSM_12_4_0316
Cat. No. I919-E1-01 1112(1112)