Cat. No.
I58E-EN-05

OMRON

Trajexia machine control system

TJ2-MC64, TJ2-MC02

PROGRAMMING MANUAL

Notice

OMRON products are manufactured for use according to proper procedures by a qualified operator and only for the purposes described in this manual. The following conventions are used to indicate and classify precautions in this manual. Always heed the information provided with them. Failure to heed precautions can result in injury to people or damage to property.

Definition of precautionary information

WARNING
Indicates a potentially hazardous situation, which, if not avoided, could result in death or serious injury.

CAUTION
Indicates a potentially hazardous situation, which, if not avoided, may result in minor or moderate injury, or property damage.

Trademarks and Copyrights

PROFIBUS is a registered trademark of PROFIBUS International.
MECHATROLINK is a registered trademark of Yaskawa Corporation.
EtherCAT is a registered trademark of Beckhoff Automation Gmbh (Germany). EtherCAT technology is protected by patents.
DeviceNet is a registered trademark of Open DeviceNet Vendor Assoc INC.
CIP is a registered trademark of Open DeviceNet Vendor Assoc INC.
CANopen is a registered trademark of CAN in Automation (CiA).
ModbusTCP is a registered trademark of Modbus IDA.
Trajexia is a registered trademark of OMRON.
All other product names, company names, logos or other designations mentioned herein are trademarks of their respective owners.

© OMRON, 2012

All rights reserved. No part of this publication may be reproduced, stored in a retrieval system, or transmitted, in any form, or by any means, mechanical, electronic, photocopying, recording, or otherwise, without the prior written permission of OMRON.
No patent liability is assumed with respect to the use of the information contained herein. Moreover, because OMRON is constantly striving to improve its high-quality products, the information contained in this manual is subject to change without notice. Every precaution has been taken in the preparation of this manual. Nevertheless, OMRON assumes no responsibility for errors or omissions. Neither is any liability assumed for damages resulting from the use of the information contained in this publication.

About this manual

This manual describes the installation and operation of the Trajexia Machine Control System.
Please read this manual and the related manuals listed in the following table carefully and be sure you understand the information provided before attempting to install or operate the Trajexia Machine Control units. Be sure to read the precautions provided in the following section.

Name	Cat. No.	Contents
Trajexia motion control system QUICK START GUIDE	I50E	Describes how to get quickly familiar with Trajexia, moving a single axis using MECHATROLINK-II, in a test set-up.
Trajexia machine control system HARDWARE REFERENCE MANUAL	I57E	Describes the installation and hardware specification of the Trajexia units, and explains the Trajexia system philosophy.
Trajexia machine control system PROGRAMMING MANUAL	I58E	Describes the BASIC commands to be used for programming Trajexia, communication protocols and Trajexia Studio software, gives practical examples and troubleshooting information.
Sigma-II Servo Drive manual	SIEP S800000 15	Describes the installation and operation of Sigma-II Servo Drives
Sigma-III with MECHATROLINK interface manual	SIEP S800000 11	Describes the installation and operation of Sigma-III Servo Drives with MECHATROLINK-II interface
Sigma-V Servo Drive manual	SIEP S800000-44 SIEP S800000-46 SIEP S800000-48	Describes the installation and operation of Sigma-V Servo Drives
JUNMA series servo drive manual	TOEP-C71080603 01-OY	Describes the installation and operation of JUNMA Servo Drives
V7 Inverter	TOEP C71060605 02-OY	Describes the installation and operation of V7 Inverters
F7Z Inverter	TOE S616-55 1-OY	Describes the installation and operation of F7Z Inverters
G7 Inverter	TOE S616-60	Describes the installation and operation of G7 Inverters
JUSP-NS115 manual	SIEP C71080001	Describes the installation and operation of the MECHATROLINK-II application module
SI-T MECHATROLINK interface for the G7 & F7	SIBP-C730600-08	Describes the installation and operation of MECHATROLINK-II interfaces for G7 and F7 Inverters
ST-T/V7 MECHATROLINK interface for the V7	SIBP-C730600-03	Describes the installation and operation of MECHATROLINK-II interfaces for V7 Inverters
MECHATROLINK IO Modules	SIE C887-5	Describes the installation and operation of MECHATROLINK-II input and output modules and the MECHATROLINK-II repeater
SYSMAC CS/CJ Series Communications Commands	W342	Describes FINS communications protocol and FINS commands
Omron Smartslice GRT1-Series, slice I/O units, Operation manual	W455-E1	Describes the installation and operation of Omron slice I/O units
Omron G-series user's manual	I566-E1	Describes the installation and operation of G-series Servo Drives
Omron Accurax G5 user's manual	I572-E1	Describes the installation and operation of Accurax Servo Drives
Trajexia Studio user manual	I56E-EN	Describes the use of Trajexia Studio programming software
Omron Accurax G5 EtherCAT user's manual	I573-E1	Describes the installation and operation of Accurax EtherCAT Servo Drives

Name	Cat. No.	Contents
MX2 User's manual	I570-E2	Describes the installation and operation of the MX2-A_ Inverter
3G3AX-MX2-ECT User's manual	I574-E1	Describes the installation and operation of the 3G3AX-MX2-ECT EtherCAT Communication Unit
GX-series EtherCAT Slave Units User's manual	W488-E1	Describes the installation and operation of the GX-series EtherCAT Slave Units
FZM1 Series User's manual	Q178-E1	Describes information on settings and specifications of the FZM1 Vision Sensor
FZM1 EtherCAT Communication manual	Q179-E1	Describes the communication with the FZM1 Vision Sensor through EtherCAT
FQ-M User's Manual	Z314-E1	Provides information regarding functions, performance and operating methods that are required for using the FQ-M.
Accurax G5 servo system Users's manual	I571-E2	This manual contains the information you need to know to correctly use the Accurax G5 and peripheral equipment.

WARNING
Failure to read and understand the information provided in this manual may result in personal injury or death, damage to the product, or product failure. Please read each section in its entirety and be sure you understand the information provided in the section and related sections before attempting any of the procedures or operations given.

Functions supported by unit versions

During the development of Trajexia new functionality will be added to the controller unit after market release.
This functionality is implemented in the firmware, and/or the FPGA of the controller unit.
In the table below, the overview of the applicable functionality is shown related to the firmware and FPGA version of the TJ2-MC__.

Functionality	TJ2-MC__ Firmware version	TJ2-MC__ FPGA version
Initial release	V2.0077	7
EtherNet/IP support added	V2.0083	7
EtherCAT support added	V2.0132	7
Support for GX-series I/O, FZM1-ECT	V2.0152	7
Support for GX-JC03/JC06, FQ-M	V2.0170	7
Support for TJ2-MC02, TJ2-KS02 and RX-ECT	V2.0192	7

Verify the firmware and FPGA versions of the TJ2-MC__

Connect the TJ2-MC__ to Trajexia Studio software. Refer to the Programming Manual.
Open the terminal window and type the following commands:

Type `PRINT VERSION` in the terminal window. The version parameter returns the current firmware version number of the motion controller.
Type `PRINT FPGA_VERSION SLOT(-1)` in the terminal window. The parameter returns the current FPGA version number of the TJ2-MC__.

1 Safety warnings and precautions . . . 1
1.1 Intended audience . . . 1
1.2 General precautions . . . 1
1.3 Safety precautions . . . 1
1.4 Operating environment precautions . . . 2
1.5 Application precautions . . . 3
1.6 Unit assembly precautions . . . 6
1.7 Conformance to EC Directives Conformance . . . 6

2 Trajexia system . . . 7
2.1 Introduction . . . 7
2.2 Multitasking BASIC programming . . . 10
2.3 BASIC programming . . . 10
2.4 Motion execution . . . 15
2.5 Command line interface . . . 16
2.6 BASIC programs . . . 16

3 BASIC commands . . . 18
3.1 Categories . . . 18
3.2 All BASIC commands . . . 28

4 Communication protocols . . . 237
4.1 Available interfaces . . . 237
4.2 Ethernet . . . 237
4.3 Serial protocol . . . 246
4.4 PROFIBUS . . . 254
4.5 DeviceNet . . . 259
4.6 CANopen . . . 264
4.7 MECHATROLINK-II . . . 268
4.8 GRT1-ML2 I/O mapping . . . 268
4.9 EtherCAT . . . 275
4.10 GRT1-ECT I/O mapping . . . 279

5 Examples and tips . . . 283
5.1 How-to’s . . . 283
5.2 Practical examples . . . 333

6 Troubleshooting . . . 358
6.1 Voltage and analysis tools . . . 358
6.2 TJ2-MC__ . . . 358
6.3 TJ1-PRT . . . 361
6.4 TJ1-DRT . . . 362
6.5 TJ1-CORT . . . 362
6.6 TJ1-ML__ . . . 363
6.7 GRT1-ML2 . . . 363
6.8 TJ1-FL02 . . . 366
6.9 TJ2-ECT__ . . . 366
6.10 GRT1-ECT . . . 366
6.11 TJ1-KS02 . . . 369

A GRT1-ML2 timing . . . 370
A.1 Timing concepts . . . 370
A.2 Examples . . . 372

Revision history . . . 375

1 Safety warnings and precautions

1.1 Intended audience

This manual is intended for personnel with knowledge of electrical systems (electrical engineers or the equivalent) who are responsible for the design, installation and management of factory automation systems and facilities.

1.2 General precautions

The user must operate the product according to the performance specifications described in this manual.
Before using the product under conditions which are not described in the manual or applying the product to nuclear control systems, railroad systems, aviation systems, vehicles, safety equipment, petrochemical plants, and other systems, machines and equipment that can have a serious influence on lives and property if used improperly, consult your OMRON representative.

1.3 Safety precautions

WARNING
Do not attempt to take the Unit apart and do not touch any of the internal parts while power is being supplied.
Doing so may result in electrical shock.

WARNING
Do not touch any of the terminals or terminal blocks while power is being supplied.
Doing so may result in electric shock.

WARNING
Never short-circuit the positive and negative terminals of the batteries, charge the batteries, disassemble them, deform them by applying pressure, or throw them into a fire.
The batteries may explode, combust or leak liquid.

WARNING
Fail-safe measures must be taken by the customer to ensure safety in the event of incorrect, missing, or abnormal signals caused by broken signal lines, momentary power interruptions, or other causes.
Not doing so may result in serious accidents.

WARNING
Emergency stop circuits, interlock circuits, limit circuits, and similar safety measures must be provided by the customer as external circuits, i.e., not in the Trajexia motion controller.
Not doing so may result in serious accidents.

WARNING
When the 24-VDC output (I/O power supply to the TJ2) is overloaded or short-circuited, the voltage may drop and result in the outputs being turned off.As a countermeasure for such problems, external safety measures must be provided to ensure safety in the system.

WARNING
The TJ2 outputs will go off due to overload of the output transistors (protection). As a countermeasure for such problems, external safety measures must be provided to ensure safety in the system.

WARNING
The TJ2 will turn off the WDOG when its self-diagnosis function detects any error. As a countermeasure for such errors, external safety measures must be provided to ensure safety in the system.

WARNING
Provide safety measures in external circuits, i.e., not in the Trajexia Machine Controller (referred to as "TJ2"), in order to ensure safety in the system if an abnormality occurs due to malfunction of the TJ2 or another external factor affecting the TJ2 operation.
Not doing so may result in serious accidents.

WARNING
Do not attempt to disassemble, repair, or modify any Units.
Any attempt to do so may result in malfunction, fire, or electric shock.

CAUTION
Confirm safety at the destination unit before transferring a program to another unit or editing the memory.
Doing either of these without confirming safety may result in injury.

CAUTION
Pay careful attention to the polarity (+/-) when wiring the DC power supply.A wrong connection may cause malfunction of the system.

CAUTION
Tighten the screws on the terminal block of the Power Supply Unit to the torque specified in this manual.
Loose screws may result in burning or malfunction.

1.4 Operating environment precautions

CAUTION
Do not operate the Unit in any of the following locations.
Doing so may result in malfunction, electric shock, or burning.
- Locations subject to direct sunlight.
- Locations subject to temperatures or humidity outside the range specified in the specifications.
- Locations subject to condensation as the result of severe changes in temperature.
- Locations subject to corrosive or flammable gases.
- Locations subject to dust (especially iron dust) or salts.
- Locations subject to exposure to water, oil, or chemicals.
- Locations subject to shock or vibration.

CAUTION
Take appropriate and sufficient countermeasures when installing systems in the following locations.
Inappropriate and insufficient measures may result in malfunction.
- Locations subject to static electricity or other forms of noise.
- Locations subject to strong electromagnetic fields.
- Locations subject to possible exposure to radioactivity.
- Locations close to power supplies.

CAUTION
The operating environment of the TJ2 System can have a large effect on the longevity and reliability of the system.
Improper operating environments can lead to malfunction, failure, and other unforeseeable problems with the TJ2 System.
Make sure that the operating environment is within the specified conditions at installation and remains within the specified conditions during the life of the system.

1.5 Application precautions

WARNING
Do not start the system until you check that the axes are present and of the correct type.
The numbers of the Flexible axes will change if MECHATROLINK-II network errors occur during start-up or if the MECHATROLINK-II network configuration changes.

WARNING
When using multiple TJ1-ML__ units, do not swap the MECHATROLINK-cables. This can result in different axis allocation. This can result in serious injury and/or significant damage.

WARNING
Check the user program for proper execution before actually running it in the Unit.
Not checking the program may result in an unexpected operation.

WARNING
AXIS_OFFSET is fixed to a unit number. Changing the position of the attached units can therefore result in a different axis allocation. This can result in serious injury and/or significant damage.

WARNING
Always connect the EtherCAT master port to the IN port of the first slave. Not doing so can result in unreliable communication and changes to address and axes assignment of EtherCAT slaves.

WARNING
Do not swap connections between the IN and OUT port of EtherCAT slaves. This can result in changes of address and axes assignment of EtherCAT slaves.

WARNING
Do not connect or disconnect EtherCAT slaves while the system is operational. Doing so can result in unreliable communication.

CAUTION
Always use the power supply voltage specified in this manual.
An incorrect voltage may result in malfunction or burning.

CAUTION
Take appropriate measures to ensure that the specified power with the rated voltage and frequency is supplied. Be particularly careful in places where the power supply is unstable.
An incorrect power supply may result in malfunction.

CAUTION
Install external breakers and take other safety measures against short-circuiting in external wiring.
Insufficient safety measures against short-circuiting may result in burning.

CAUTION
Do not apply voltage to the Input Units in excess of the rated input voltage.
Excess voltage may result in burning.

CAUTION
Do not apply voltage or connect loads to the Output Units in excess of the maximum switching capacity.
Excess voltage or loads may result in burning.

CAUTION
Disconnect the functional ground terminal when performing withstand voltage tests.
Not disconnecting the functional ground terminal may result in burning.

CAUTION
Always connect to a class-3 ground (to 100Ω or less) when installing the Units.
Not connecting to a class-3 ground may result in electric shock.

CAUTION
Always turn off the power supply to the system before attempting any of the following.
Not turning off the power supply may result in malfunction or electric shock.
- Mounting or dismounting expansion Units, CPU Units, or any other Units.
- Assembling the Units.
- Setting dipswitches or rotary switches.
- Connecting or wiring the cables.
- Connecting or disconnecting the connectors.

CAUTION
Be sure that all mounting screws, terminal screws, and cable connector screws are tightened to the torque specified in this manual.
Incorrect tightening torque may result in malfunction.

CAUTION
Leave the dust protective label attached to the Unit when wiring.
Removing the dust protective label may result in malfunction.

CAUTION
Remove the dust protective label after the completion of wiring to ensure proper heat dissipation.
Leaving the dust protective label attached may result in malfunction.

CAUTION
Use crimp terminals for wiring. Do not connect bare stranded wires directly to terminals.
Connection of bare stranded wires may result in burning.

CAUTION
Double-check all the wiring before turning on the power supply.
Incorrect wiring may result in burning.

CAUTION
Wire correctly.
Incorrect wiring may result in burning.

CAUTION
Mount the Unit only after checking the terminal block completely.

CAUTION
Be sure that the terminal blocks, expansion cables, and other items with locking devices are properly locked into place.
Improper locking may result in malfunction.

CAUTION
Confirm that no adverse effect will occur in the system before changing the operating mode of the system.
Not doing so may result in an unexpected operation.

CAUTION
Resume operation only after transferring to the new CPU Unit the contents of the VR and table memory required for operation.
Not doing so may result in an unexpected operation.

CAUTION
When replacing parts, be sure to confirm that the rating of a new part is correct.
Not doing so may result in malfunction or burning.

CAUTION
Do not pull on the cables or bend the cables beyond their natural limit. Doing so may break the cables.

CAUTION
Before touching the system, be sure to first touch a grounded metallic object in order to discharge any static build-up.
Otherwise it might result in a malfunction or damage.

CAUTION
UTP cables are not shielded. In environments that are subject to noise use a system with shielded twisted-pair (STP) cable and hubs suitable for an FA environment.
Do not install twisted-pair cables with high-voltage lines.
Do not install twisted-pair cables near devices that generate noise.
Do not install twisted-pair cables in locations that are subject to high humidity.
Do not install twisted-pair cables in locations subject to excessive dirt and dust or to oil mist or other contaminants.

CAUTION
Use the dedicated connecting cables specified in operation manuals to connect the Units.
Not doing so may result in malfunction of the system.

CAUTION
Outputs may remain on due to a malfunction in the built-in transistor outputs or other internal circuits.As a countermeasure for such problems, external safety measures must be provided to ensure the safety of the system.

CAUTION
The TJ2 will start operating in RUN mode when the power is turned on and if a BASIC program is set to Auto Run mode.

CAUTION
Always check the “Status-Words” of each GRT1-ML2 and GRT1-ECT SmartSlice coupler.
Not doing so can lead to missing or incorrect I/O data.

CAUTION
Always check the status of the connected MECHATROLINK-II devices in a BASIC program.
Not doing so may result in an unexpected operation.

CAUTION
The TJ1-CORT unit is developed to exchange I/O data between the Trajexia system and a CANopen network.
The TJ1-CORT is not able to exchange motion commands.
Using the TJ1-CORT to exchange motion commands may result in unexpected operation.

CAUTION
Although the TJ2-MC__ in most cases is backwards compatible with TJ1-MC__, applications written for TJ1-MC__ must be tested carefully when running on TJ2-MC__.
Not doing so may result in unexpected operation.

CAUTION
When using multiple TJ1-ML__ units, do not swap the MECHATROLINK-cables. This can result in different axis allocation. This can result in serious injury and/or significant damage.

1.6 Unit assembly precautions

CAUTION
Install the unit properly.
Improper installation of the unit may result in malfunction.

CAUTION
Be sure to mount the Termination Unit supplied with the TJ2-MC__ to the right most Unit.
Unless the Termination Unit is properly mounted, the TJ2 will not function properly.

1.7 Conformance to EC Directives Conformance

1.7.1 Concepts

The concepts for the directives EMC and Low Voltage are as follows:

EMC Directives
OMRON devices that comply with EC Directives also conform to the related EMC standards so that they can be more easily built into other devices or machines. The actual products have been checked for conformity to EMC standards. Whether the products conform to the standards in the system used by the customer, however, must be checked by the customer.
EMC-related performance of the OMRON devices that comply with EC Directives will vary depending on the configuration, wiring, and other conditions of the equipment or control panel in which the OMRON devices are installed. The customer must, therefore, perform final checks to confirm that devices and the over-all machine conform to EMC standards.

Low Voltage Directive
Always ensure that devices operating at voltages of 50 to 1,000 VAC or 75 to 1,500 VDC meet the required safety standards.

2 Trajexia system

2.1 Introduction

Trajexia is OMRON's motion platform that offers you the performance and the ease of use of a dedicated motion system.

Trajexia is a stand-alone modular system that allows maximum flexibility and scalability. At the heart of Trajexia lies the TJ2 multi-tasking machine controller. Powered by a 64-bit processor, it can do motion tasks such as e-cam, e-gearbox, registration control and interpolation, all via simple motion commands.

Trajexia offers control of up to 64 axes over a MECHATROLINK-II or EtherCAT network or traditional analogue or pulse control with independent position, speed or torque control for every axis. And its powerful motion instruction set makes programming intuitive and easy.

You can select from a wide choice of best-in-class rotary, linear and direct-drive Servo systems as well as Inverters. The system is scalable up to 64 axes, Inverters or I/O modules.

The TJ2-MC__ also contains an IEC 61131-3 compliant soft PLC, capable of controlling I/O and performing motion.

fig. 1

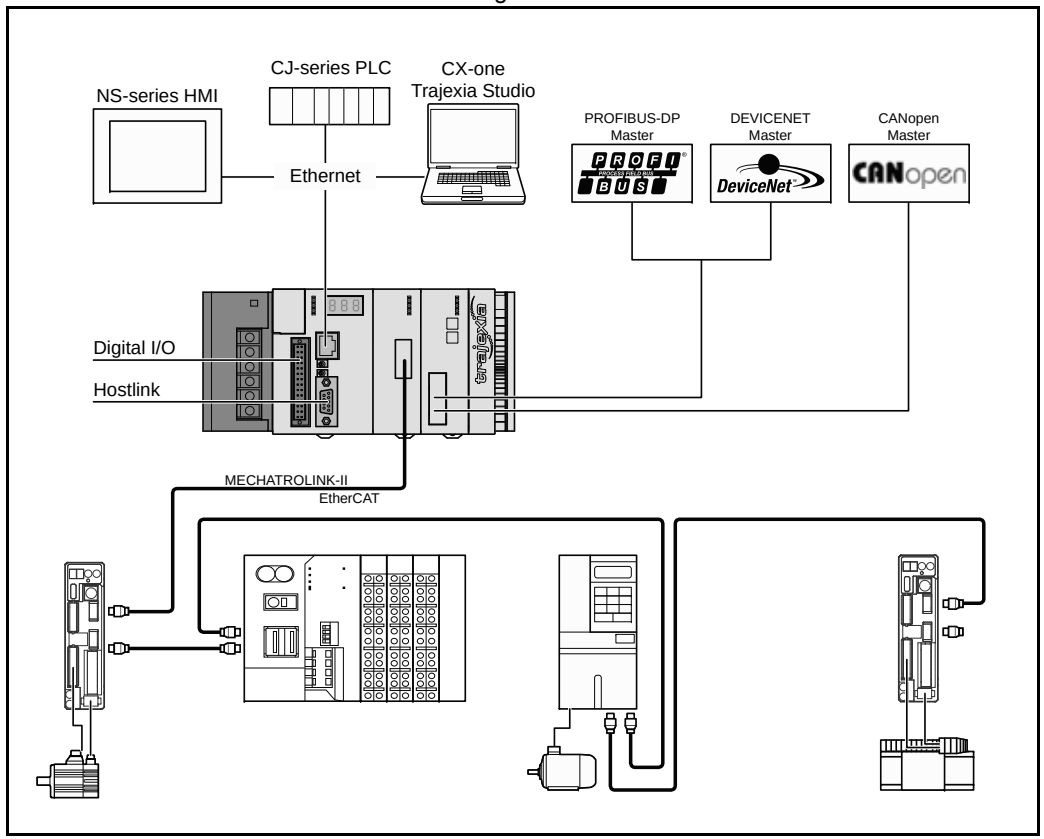

2.1.1 Trajexia hardware

The Trajexia hardware is described in the Trajexia Hardware Reference manual. It is recommend to read the Hardware Reference manual first. The Trajexia system gives these advantages:

Direct connectivity via Ethernet
Trajexia's built-in Ethernet interface provides direct and fast connectivity to PCs, PLCs, HMIs and other devices while providing full access to the CPU and to the Drives over a MECHATROLINK-II or EtherCAT network. It allows explicit messaging over Ethernet and through MECHATROLINK-II or EtherCAT to provide full transparency down to the actuator level, and making remote access possible.

Keep your know-how safe
By preventing access to the programs in the controller Trajexia guarantees complete protection and confidentiality for your valuable know-how.

Serial Port and Local I/Os
A serial port provides direct connectivity with any OMRON PLC, HMIs or any other field device. 16 Inputs and 8 outputs are freely configurable embedded I/Os in the controller to enable you to tailor Trajexia to your machine design.

MECHATROLINK-II Master
The MECHATROLINK-II master performs control of up to 16 Servo Drives, Inverters or I/Os while allowing complete transparency across the whole system.MECHATROLINK-II offers the communication speed and time accuracy essential to guarantee perfect motion control of Servo Drives. The motion cycle time is selectable between 0.5 ms, 1 ms or 2 ms.

EtherCAT Master
EtherCAT is an open high-speed industrial network system that conforms to Ethernet (IEEE802.3). Each node achieves a short cycle time by transmitting Ethernet frames at high speed. A mechanism that allows sharing clock information enables high-precision synchronization control with low communications jitter.
The EtherCAT master performs control of up to 64 Servo Drives, Inverters or I/Os while allowing complete transparency across the whole system. The motion cycle time is selectable between 0.25 ms, 0.5 ms, 1 ms or 2 ms.

TJ1-FL02 (Flexible Axis Unit)
The TJ1-FL02 allows full control of two actuators via an analogue output or pulse train. The module supports the main absolute encoder protocols allowing the connection of an external encoder to the system.

TJ2-KS02 (Accurax G5 Serial Interface Unit)
The TJ2-KS02 allows full control of Servo Drives via a high-speed serial interface. The module also supports incremental and the main absolute encoder protocols allowing the connection of an external encoder to the system.

Drives and Inverters
A wide choice of rotary, linear and direct-drive Servo systems as well as Inverters are available to fit your needs in compactness, performance and reliability. The Inverters connected to MECHATROLINK-II and EtherCAT are driven at the same update cycle time as the Servo Drives.

Remote I/Os
The I/Os on the MECHATROLINK-II or EtherCAT network provide for system expansion while keeping the devices under one motion bus.

PROFIBUS-DP
The PROFIBUS-DP slave allows connectivity to the PROFIBUS network in your machine.

DeviceNet
The DeviceNet slave allows connectivity to the DeviceNet network in your machine.

CANopen
The CANopen master allows connectivity to the CANopen network in your machine.

Modbus
Both ModbusRTU via serial and ModbusTCP via Ethernet are supported to be able to connect to masters supporting the same interface.

2.1.2 This manual

This Programming Manual gives the dedicated information for:

- The description and use of the BASIC commands
- The communication protocols necessary for the Trajexia system
- The use and description of the parts of the Trajexia Studio interface
- Program examples and good programming practices
- Troubleshooting and fault finding.

2.2 Multitasking BASIC programming

The TJ2-MC__ units (Machine Controller Unit) feature a multitasking version of the BASIC programming language. The motion control language is largely based upon a tokenised BASIC and the programs are compiled into the tokenised form prior to their execution.
Multitasking is simple to set up and use and allows very complex machines to be programmed. Multitasking gives the TJ2-MC__ a significant advantage over equivalent single task systems. It allows modular applications where the logically connected processes can be grouped together in the same task program, thus simplifying the code architecture and design.
The TJ2-MC__ can hold up to 32 programs if memory size permits. Up to 22 programs can be run simultaneously. The execution of the programs is user controlled using BASIC.
The BASIC commands, functions and parameters presented here can be found in chapter 3.

2.3 BASIC programming

The BASIC language consists among others of commands, functions and parameters. These BASIC statements are the building blocks provided to control the TJ2-MC__ operation.
Commands are words recognized by the processor that perform a certain action but do not return a value. For example, **PRINT** is a recognized word that will cause the value of the following functions or variables to be printed on a certain output device.
Functions are words recognized by the processor that perform a certain action and return a value related to that action. For example, **ABS** will take the value of its parameter and return the absolute value of it to be used by some other function or command. For example **ABS(-1)** will return the value 1, which can be used by the **PRINT** command, for example, to generate a string to be output to a certain device.
Parameters are words recognized by the processor that contain a certain value. This value can be read and, if not read only, written. Parameters are used to determine and monitor the behaviour of the system. For example, **ACCEL** determines the acceleration rate of a movement for a certain axis.

2.3.1 Axis, system and task statements

The commands, functions and parameters apply either to (one of) the axes, the tasks running or the general system.

Axis statements

The motion control commands and the axis parameters apply to one or more axes. Axis parameters determine and monitor how an axis reacts on commands given and how it reacts to the outside world. Every axis has a set of parameters, so that all axes can work independently of each other. The motion control commands are able to control one or more of the axes simultaneously, while every axis has its own behaviour. The axis parameters are reset to their default values for each startup.
The commands and parameters work on some base axis or group of axes, specified by the **BASE** command. The **BASE** command is used to change this base axis group and every task has its own group which can be changed at any time. The default base axis is 0.
Individual axis dependent commands or parameters can also be programmed to work on a temporary base axis by including the **AXIS** function as a modifier in the axis dependent command. A temporary base axis is effective only for the command or parameter after which **AXIS** appears.

Task statements

The task parameters apply to a single task. The task parameters monitor the task for example for error handling. The **PROC** modifier allows the user to access a parameter of a certain task. Without **PROC** the current task is assumed. The **BASE** command (see above) is task specific and can be used with the **PROC** modifier.

System statements

These statements govern the overall system features, which are basically all statements which do not belong to the first two groups.

2.3.2 Memory areas

Three main memory areas can be identified in the Trajexia Motion Controller Unit:

- I/O memory.
- VR memory.
- TABLE memory.

I/O memory

I/O memory is used for holding the status of input and output devices connected to the Trajexia system. It is divided into two sub-areas: one for digital I/O memory, and one for analog I/O memory. The digital I/O memory holds input and output statuses of digital I/O devices. Its capacity is 1024 bits (input points) for input and 1024 bits (output points) for outputs. The inputs in this memory can be accessed using the **IN** command. The outputs can be accessed using the **OUT** command.
The analog I/O memory holds input and output values of analog I/O devices. Its capacity is 36 input channels and 36 output channels. The analog input channels can be accessed using the **AIN** command. The analog output channels can be accessed using the **AOUT** command.

VR memory

VR memory is commonly used if some data or value needs to be global, which means that it is accessible from all programs in the project at the same time. The size of this memory is 64,000 slots with indexes 0 to 63,999. A memory slot is addressed using the **VR(x)** macro where **x** is index of the VR memory slot. The VR memory is accessible for reading and writing. Writing is done by making mathematical assignment using the **=** command in the program. The content of this memory is held in the battery powered RAM memory and is preserved during power off. The VR memory is also preserved when changing the battery, if this is done quickly.

TABLE memory

TABLE is commonly used if some data or value needs to be global, which means that it is accessible from all programs in the project at the same time. Whereas the VR memory is used for similar purposes to define several global data and values, TABLE memory is used for much bigger amounts of global data, which also need to be arranged in a certain order. For this reason, TABLE memory is commonly used for storing TABLE data, motion profiles, logging data, etc. Some BASIC commands that provide this type and size of data, for example **SCOPE**, **CAM**, **CAMBOX** etc., require use of TABLE memory to write their results. The size of this memory is 500,000 slots with indexes 0 to 499,999. The TABLE is accessible for reading and writing too, but the way it is accessed differs for those two operations. Before being read, a particular TABLE memory slot needs to be defined and written first, using the command **TABLE(x, value1, value2,…)** where **x** is the index of the start TABLE memory slot to define, and **value1**, **value2**, ... are the values written into the TABLE memory at indexes x, x+1, ... Once defined and written, the TABLE memory slot can be read using the **TABLE(x)** command, where **x** is the index of the TABLE memory slot. An attempt to read an undefined TABLE memory slot results in an error reported by the TJ2-MC__. The first 65,536 TABLE memory entries are held in the battery powered RAM memory and is preserved during power off. This part of the TABLE memory is also preserved when changing the battery, if this is done quickly.

2.3.3 Data structures and variables

BASIC programs can store numerical data in various types of variables. Some variables have predefined functions, such as the axis parameters and system parameters; other variables are available for the programmer to define as required in programming. The TABLE, global and local variables of the TJ2-MC__ are explained in this section. Furthermore also the use of labels will be specified.

TABLE variables

The TABLE is an array structure that contains a series of numbers. These numbers are used for instance to specify positions in the profile for a **CAM** or **CAMBOX** command. They can also be used to store data for later use, for example to store the parameters used to define a workpiece to be processed.
The TABLE is common to all tasks on the TJ2-MC__. This means that the values written to the TABLE from one task can be read from other tasks. TABLE values can be written and read using the **TABLE** command. The maximum length of the array is 500,000 elements, from **TABLE(0)** to **TABLE(499999)**. The TABLE array is initialized up to the highest defined element.

Global variables

The global variables, defined in VR memory, are common to all tasks on the TJ2-MC__. This means that if a program running on task 2 sets VR(25) to a certain value, then any other program running on a different task can read that same value from VR(25). This is very useful for synchronizing two or more tasks, but care must be taken to avoid more than one program writing to the same variable at the same time. The controller has 64,000 global variables, VR(0) to VR(63999). The variables are read and written using the **VR** command.

NOTE
The TABLE and VR data can be accessed from the different running tasks. When using either VR or TABLE variables, make sure to use only one task to write to one particular variable. This to avoid problems of two program tasks writing unexpectedly to one variable.

Local variables

Named variables or local variables can be declared in programs and are local to the task. This means that two or more programs running on different tasks can use the same variable name, but their values can be different. Local variables cannot be read from any task except for the one in which they are declared. Local variables are always cleared when a program is started. The local variables can be cleared by using either the **CLEAR** or the **RESET** command.
A maximum of 1024 local variables can be declared. Only the first 32 characters of the name are significant. Undefined local variables will return zero. Local variables cannot be declared on the command line.

Labels

The BASIC programs are executed in descending order through the lines. Labels can be used to alter this execution flow using the BASIC commands **GOTO** and **GOSUB**. To define a label it must appear as the first statement on a line and it must be ended by a colon (:). Labels can be character strings of any length, but only the first 32 characters are significant.

Using variables and labels

Each task has its own local labels and local variables. For example, consider the two programs shown below:

```
start:
    FOR a = 1 to 100
        MOVE(a)
        WAIT IDLE
    NEXT a
GOTO start
```

```
start:
    a=0
    REPEAT
        a = a + 1
        PRINT a
    UNTIL a = 300
GOTO start
```

These two programs when run simultaneously in different tasks and have their own version of variable **a** and label **start**.
If you need to hold data in common between two or more programs, VR variables should be used. Or alternatively if the large amount of data is to be held, the TABLE memory can be used.
To make a program more readable when using a global VR variable, two approaches can be taken. The first is using a named local variable as a constant in the VR variable. The local constant variable, however, must be declared in each program using the global VR variable. Using this approach, the example below shows how to use VR(3) to hold a length parameter common for several programs:

```
start:
    GOSUB Initial
    VR(length) = x
    ...
    ...

Initial:
    length = 3
    RETURN
```

```
start:
    GOSUB Initial
    MOVE(VR(length))
    PRINT(VR(length))
    ...

Initial:
    length = 3
    RETURN
```

The other approach is even more readable and uses the **GLOBAL** command to declare the name as a reference to one of the global VR variables. The name can then be used from within the program containing the **GLOBAL** definition and all other programs. Take care that the program containing the **GLOBAL** definition must be run before the name is used in other programs. The best practice is to define global names in the start-up program. Using this approach, the example above becomes:

```
'The declaration in start-up program
GLOBAL length, 3

'In other programs executed after the start-up program
```

```
start:
    length = x
    ...
    ...
```

```
start:
    MOVE(length)
    PRINT(length)
    ...
```

2.3.4 Mathematical specifications

Number format

The TJ2-MC__ has two main formats for numeric values: double precision floating point and double precision integer.
The double precision floating point format is internally a 64 bit value. It has an 11 bit exponent field, a sign bit and a 52 bit fraction field. Floating point numbers have a valid range of $\pm 2.2\times10^{-308}$ to $\pm 1.8\times10^{308}$.
Integers are essentially floating point numbers with a zero exponent. This implies that the integers are 53 bits wide. The integer range is therefore given from -9,007,199,254,740,992 to 9,007,199,254,740,991. Numeric values outside this range will be floating point.

WARNING
All mathematical calculations are done in floating point format. This implies that for calculations of/with larger values the results may have limited accuracy. The user should be aware of this when developing the motion control application.

Hexadecimal format

The TJ2-MC__ supports assigning and printing hexadecimal values.
A hexadecimal number is input by prefixing the number with the $ character. Valid range is from 0x0 to 0xFFFFFFFFFFFFF. Example:

```
>> VR(0)=$FF
>> PRINT VR(0)
255.0000
```

A value can be printed in hexadecimal by using the **HEX** function. Negative values result in the 2's complement hexadecimal value (53-bit). Valid range is from -9,007,199,254,740,991 to 9,007,199,254,740,991. Example:

```
>> TABLE(0,-10,65536)
>> PRINT HEX(TABLE(0)),HEX(TABLE(1))
1FFFFFFFFFFFF6 10000
```

Positioning

For positioning, the TJ2-MC__ will round up if the fractional encoder edge distance calculated exceeds 0.9. Otherwise the fractional value will be rounded down. The internal measured position and demanded position of the axes, represented by the **MPOS** and **DPOS** axis parameters, have 64-bit counters.

Floating point comparison

The comparison function considers a small difference between values as equal to avoid unexpected comparison results. Therefore any two values for which the difference is less than 1.19×10^{-6} are considered equal.

Precedence

The precedence of the operators is given below:

1. Unary minus, **NOT**
2. ^
3. / *
4. **MOD**
5. + -
6. = <> > >= <= <
7. **AND OR XOR**
8. Left to right

The best way to ensure the precedence of various operators is through the use of parentheses.

2.4 Motion execution

Every task on the TJ2-MC__ has a set of buffers that holds the information from the motion commands given.

2.4.1 Motion generator

The motion generator has a set of up to 64 motion buffers for each axis. One buffer called **MTYPE**, holds the Actual Move, which is the move currently executing on the axis. The next buffer called **NTYPE**, holds the Next Move, which is executed after the Actual Move has finished.
See chapter 2.8 “Motion Buffers” in the Trajexia Hardware Reference manual for detailed explanation.

The BASIC programs are separate from the motion generator program, which controls moves for the axes. The motion generator has separate functions for each axis, so each axis is capable of being programmed with its own axis parameters (for example speed, acceleration) and moving independently and simultaneously or they can be linked together using special commands.
When a move command is being processed, the motion generator waits until the move is finished and the buffer for the required axis has become empty, and then loads these buffers with the next move information.

NOTE
If the task buffers are full, the program execution is paused until buffers are available again. This also applies to the command line task and no commands can be given for that period. Trajexia Studio will disconnect in such a case. The **PMOVE** task parameter will be set to TRUE when the task buffers are full and will be reset to FALSE when the task buffers are available again.

fig. 2

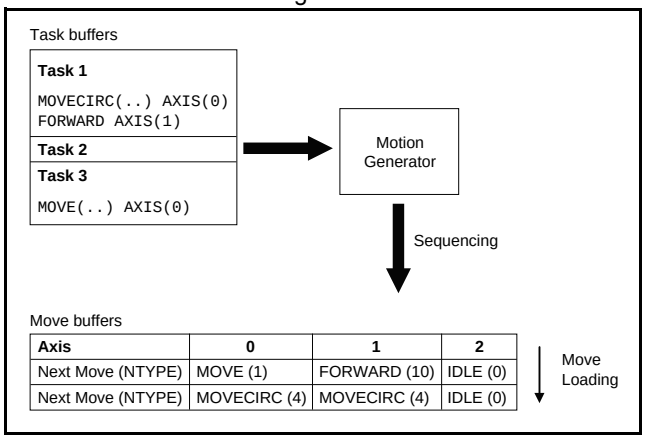

2.4.2 Sequencing

On each servo cycle interrupt (see section 2.6.2), the motion generator examines the **NTYPE** buffers to see if any of them are available. If there are any available then it checks the task buffers to see if there is a move waiting to be loaded. If a move can be loaded, then the data for all the specified axes is loaded from the task buffers into the **NTYPE** buffers and the corresponding task buffers are marked as idle. This process is called sequencing.

2.4.3 Move loading

Once sequencing has been completed, the **MTYPE** buffers are checked to see if any moves can be loaded. If the required **MTYPE** buffers are available, then the move is loaded from the **NTYPE** buffers to the **MTYPE** buffers and the **NTYPE** buffers are marked as idle. This process is called move loading. If there is a valid move in the **MTYPE** buffers, then it is processed. When the move has been completed, the **MTYPE** buffers are marked as idle.

2.5 Command line interface

The command line interface provides a direct interface for the user to execute commands and access parameters on the system.
Use the Terminal Window in Trajexia Studio when the TJ2-MC__ is connected.
Trajexia Studio buffers the last used commands. Pressing the Up and Down Cursor Key will cycle through the buffer to execute the command again.

2.6 BASIC programs

The TJ2-MC__ can store up to 32 programs in memory, provided the capacity of memory is not exceeded. The TJ2-MC__ supports simple file-handling instructions for managing these program files rather like the DOS filing system on a computer.
The Trajexia Studio software package is used to store and load programs to and from a computer for archiving, printing and editing. It also has several controller monitor and debugging facilities.

2.6.1 Managing programs

The Trajexia Studio software package is used to store and load programs to and from a computer for archiving, printing and editing. It also has several controller monitor and debugging facilities. For more information please refer to the Trajexia Studio user manual.

Storing programs

Programs in the TJ2-MC__ are stored automatically in Flash-ROM memory and therefore do not rely on the battery.

2.6.2 Program execution

The timing of the execution for the different tasks and the refreshing of the I/O of the TJ2-MC__ revolves around the servo cycle period of the system. The servo cycle period is determined by the **SERVO_PERIOD** system parameter. The TJ2-MC__ will either have a servo cycle period of 0.25, 0.5, 1.0 or 2.0 ms.

I/O refresh

The I/O status of the TJ2-MC__ is refreshed at the beginning of every cycle time.

- The captured status of the digital inputs is transferred to the **IN** system input variable. Note that this is the status captured in the previous servo cycle.
- The analogue outputs for the speed references are updated.
- The digital outputs are updated conform the status of the **OP** system output variable.
- The status of the digital inputs is captured.

Note that no automatic processing of the I/O signals is taking place, except for registration. This implies that all actions must be programmed in the BASIC programs.

Relevant commands

Trajexia Studio provides several ways of executing, pausing and stopping the programs using buttons on the control panel and the editing windows. The following commands can be given on the command line to control the execution.

Command	Function
RUN	Run the current selected program or a specified program, optionally on a specified task number.
STOP	Stop the current selected program or a specified program.
HALT	Stop all programs on the system.
PROCESS	Displays all running tasks.

The user can explicitly allocate the task priority on which the BASIC program is expected to run. When a user program is run without explicit task allocation, it is assigned the highest available task priority.

Setting programs to run at start-up

Programs can be set to run automatically at different priorities when power is turned on. If required, the computer can be left connected as an operator interface or may be removed and the programs run stand-alone.
Programs are set in Trajexia Studio to run automatically at start-up by setting the startup priority with the Priority property in the Properties window. If you click the ellipsis button in the edit field of this property, the StartUp Priority window shows. To set the program to run at power up, select the Run at Power Up check box and select a priority in the list. Possible priority values are Default, 0 to 19 (low priority) and 20 to 21 (high priority).The current status in the controller can be seen using the **DIR** command.
For more information on program control, multitasking and cycle times, refer to sections 2.2 and 2.3 of the Trajexia Hardware Reference Manual.

3 BASIC commands

3.1 Categories

This section lists all BASIC commands divided by categories. The categories are:

- Axis commands.
- Axis parameters.
- Communication commands and parameters.
- Constants.
- I/O commands, functions and parameters.
- Mathematical functions and operations.
- Program commands.
- Program control commands.
- Slot parameters and modifiers.
- System commands and functions.
- System parameters.
- Task commands and parameters.

The lists are quick reference guides only. A complete description of the commands is given in alphabetical order in the next section.

3.1.1 Axis commands

Name	Description
ACC	Changes the **ACCEL** and **DECEL** at the same time.
ADD_DAC	Sum to the **DAC** value of one axis to the analogue output of the base axis.
ADDAX	Sets a link to a superimposed axis. All demand position movements for the superimposed axis will be added to any moves that are currently being executed.
BACKLASH	Allows the backlash compensation to be loaded.
BASE	Used to set the base axis to which the commands and parameters are applied.
CAM	Moves an axis according to values of a movement profile stored in the TABLE variable array.
CAMBOX	Moves an axis according to values of a movement profile stored in the TABLE variable array. The motion is linked to the measured motion of another axis to form a continuously variable software gearbox.
CANCEL	Cancels the move on an axis.
CONNECT	Connects the demand position of an axis to the measured movements of an other axis to produce an electronic gearbox.
DATUM	Performs one of 7 origin search sequences to position an axis to an absolute position or reset a motion error.
DEFPOS	Defines the current position as a new absolute position.
DISABLE_GROUP	Groups axes together for error disabling.
DRIVE_ALARM	Monitors the current alarm.
DRIVE_CLEAR	Clears the alarm status of the Servo Drive.
	Reads the specified parameter of the Servo Drive.
DRIVE_RESET	Resets the Servo Drive.
DRIVE_WRITE	Writes a specific value to the specified parameter of the Servo Drive.
ENCODER_READ	Reads a parameter of the EnDat absolute encoder.
ENCODER_WRITE	Writes to a parameter of the EnDat absolute encoder.
ETHERCAT	Initializes EtherCAT network and performs various operations on EtherCAT slaves connected to the bus.
FORWARD	Moves an axis continuously forward at the speed set in the **SPEED** parameter.
MECHATROLINK	Initializes MECHATROLINK-II network and performs various operations on MECHATROLINK-II stations connected to the bus.
MHELICAL	Interpolates 3 orthogonal axes in a helical move.
MHELICALSP	Forced speed version of the **MHELICAL** command.

Name	Description
MOVE	Moves one or more axes at the demand speed, acceleration and deceleration to the position specified as increment from the current position.
MOVEABS	Moves one or more axes at the demand speed, acceleration and deceleration to the position specified as absolute position.
MOVEABSSP	Forced speed version of the **MOVEABS** command.
MOVECIRC	Interpolates 2 orthogonal axes in a circular arc.
MOVECIRCSP	Forced speed version of the **MOVECIRC** command.
MOVELINK	Creates a linear move on the base axis linked via a software gearbox to the measured position of a link axis.
MOVEMODIFY	Changes the absolute end position of the current single-axis linear move (**MOVE** or **MOVEABS**).
MOVESP	Forced speed version of the **MOVE** command.
MOVETANG	Performs a Tangential move.
MSPHERICAL	Moves a group of three axes along a spherical path.
MSPHERICALSP	Forced speed version of the **MSPHERICAL** command.
R_REGIST	Captures an axis position when a registration input or the Z mark on the TJ2-ECT__ is detected.
RAPIDSTOP	Cancels the current move on all axes.
REGIST	Captures an axis position when a registration input or the Z mark on the encoder is detected.
REVERSE	Moves an axis continuously in reverse at the speed set in the **SPEED** parameter.
SPHERE_CENTRE	Returns the coordinates of the centre point (x, y, z) of the most recent **MSPHERICAL**.
STEP_RATIO	Sets the ratio for the axis stepper output.
SYNC	Command to synchronise one axis with a moving position on another axis.
VOLUME_LIMIT	Enables a software limit that restricts the motion into a defined three dimensional shape.

3.1.2 Axis parameters

Name	Description
ACCEL	Contains the axis acceleration rate.
ADDAX_AXIS	Contains the number of the axis to which the base axis is currently linked to by **ADDAX**.
ATYPE	Contains the axis type.
AXIS_DISPLAY	Selects information that are represented by the LEDs on the front cover of the TJ1-FL02.
AXIS_DPOS	Contains the axis demand position at output of **FRAME** transformation.
AXIS_ENABLE	Enables and disables particular axis independently of other axis.
AXIS_FS_LIMIT	Holds the absolute position of the forward travel limit in user **AXIS_UNITS**.
AXIS_RS_LIMIT	Holds the absolute position of the reverse travel limit in user **AXIS_UNITS**.
AXIS_UNITS	A conversion factor to scale the edges/ stepper pulses to a more convenient scale. AXIS_UNITS is only used when a FRAME is active.
AXISSTATUS	Contains the axis status.
BACKLASH_DIST	Defines the amount of backlash compensation.
CHANGE_DIR_LAST	Defines the change in direction in radians of the last programmed **MOVESP**/**MOVEABSSP**/**MOVECIRCSP** move of 2 or more axes.
CLOSE_WIN	Defines the end of the window in which a registration mark is expected.
CLUTCH_RATE	Defines the change in connection ratio when using the **CONNECT** command.
CORNER_STATE	Allows a BASIC program to interact with the move loading process to facilitate knife rotation at sharp corners.
CREEP	Contains the creep speed.

Name	Description
D_GAIN	Contains the derivative control gain.
DAC_SCALE	Sets scale and polarity applied to **DAC** values.
DATUM_IN	Contains the input number to be used as the origin input.
DECEL	Contains the axis deceleration rate.
DECEL_ANGLE	Defines the angle change in radians above which an X-Y system should start to decelerate.
DEMAND_EDGES	Contains the current value of the **DPOS** axis parameter in encoder edges.
DPOS	Contains the demand position generated by the move commands.
DRIVE_CONTROL	Selects data to be monitored using **DRIVE_MONITOR** for axes connected via the MECHATROLINK-II or EtherCAT network. For axes connected via the TJ1-FL02, **DRIVE_CONTROL** sets outputs of the TJ1-FL02.
DRIVE_INPUTS	Holds I/O data of the Drive connected to MECHATROLINK-II or EtherCAT network. Data is updated every servo cycle.
DRIVE_MONITOR	Monitors data of the Servo Drive connected to MECHATROLINK-II or EtherCAT network. Data are updated every servo cycle.
DRIVE_OUTPUTS	Controls the status of the outputs of the Servo Drive connected via the TJ2-KS02. The parameter value is updated every servo cycle.
DRIVE_STATUS	Contains the current status of the Servo Drive.
ENCODER	Contains a raw copy of the encoder hardware register.
ENCODER_BITS	Sets the number of bits for the absolute encoder connected to TJ1-FL02 or TJ2-KS02.
ENCODER_CONTROL	Controls operating mode of the EnDat absolute encoder.
ENCODER_ID	Returns the ID value of the Tamagawa absolute encoder connected to TJ1-FL02
ENCODER_RATIO	Sets scaling value for incoming encoder counts.
ENCODER_STATUS	Returns the status of the Tamagawa absolute encoder.

Name	Description
ENCODER_TURNS	Returns the multi-turn count of the absolute encoder.
END_DIR_LAST	Defines the end direction in radians of the last programmed forced speed move of 2 or more axes.
ENDMOVE	Holds the position of the end of the current move.
ENDMOVE_BUFFER	Holds the absolute position at the end of the buffered sequence.
ENDMOVE_SPEED	Contains the ramp to exit speed when forced speed moves are loaded.
ERRORMASK	Contains the mask value that determines if **MOTION_ERROR** occurs depending on the axis status.
FAST_JOG	Contains the input number to be used as the fast jog input.
FASTDEC	Defines ramp to zero deceleration ratio when an axis limit switch or position is reached.
FE	Contains the Following Error.
FE_LATCH	Contains the FE value which caused the axis to put controller in **MOTION_ERROR** state.
FE_LIMIT	Contains the maximum allowable Following Error.
FE_LIMIT_MODE	Defines how FE influences **MOTION_ERROR** state.
FE_RANGE	Contains the Following Error warning range limit.
FHOLD_IN	Contains the input number to be used as the feedhold input.
FHSPEED	Contains the feedhold speed.
FORCE_SPEED	Contains the speed when forced speed moves are loaded.
FRAME	Specifies operating frame for frame transformations.
FRAME_GROUP	Defines the group of axes and the table offset which are used in a **FRAME** or **USER_FRAME** transformation.
FRAME_TRANS	Function to perform both the forward and inverse transformation calculations of a **FRAME**.
FS_LIMIT	Contains the absolute position of the forward software limit.
FULL_SP_RADIUS	Contains the full speed radius in user **UNITS**.
FWD_IN	Contains the input number to be used as a forward limit input.

Name	Description
FWD_JOG	Contains the input number to be used as a jog forward input.
I_GAIN	Contains the integral control gain.
INPUT	
INVERT_STEP	Switches a hardware Inverter into the stepper output circuit.
JOGSPEED	Sets the jog speed.
LIMIT_BUFFERED	Contains the maximum number of move buffers available in the controller.
MARK	Detects the primary registration event on a registration input.
MARKB	Detects the secondary registration event on a registration input.
MERGE	Is a software switch that can be used to enable or disable the merging of consecutive moves.
MOVES_BUFFERED	Holds the number of moves being buffered by the axis.
MPOS	Is the position of the axis as measured by the encoder.
MSPEED	Represents the change in the measured position in the last servo period.
MTYPE	Contains the type of move currently being executed.
NTYPE	Contains the type of the move in the Next Move buffer.
OFFPOS	Contains an offset that will be applied to the demand position without affecting the move in any other way.
OPEN_WIN	Defines the beginning of the window in which a registration mark is expected.
OUTLIMIT	Contains the limit that restricts the speed reference output from the TJ2-MC__.
OV_GAIN	Contains the output velocity control gain.
P_GAIN	Contains the proportional control gain.
R_MARK	Detects the registration event on a registration input of a TJ2-ECT__.
R_REGISTSPEED	Contains the speed when the registration event on an input of a TJ2-ECT__ occurred.

Name	Description
R_REGPOS	Contains the position at which the registration event on the an input of a TJ2-ECT__ occurred.
RAISE_ANGLE	Defines the angle change in radians above which an X-Y system will interact with a BASIC program.
REG_POS	Contains the position at which the (primary) registration event occurred.
REG_POSB	Contains the position at which the secondary registration event occurred.
REGIST_SPEED	Contains the speed when the (primary) registration event occurred.
REGIST_SPEEDB	Contains the speed when the secondary registration event occurred.
REMAIN	Is the distance remaining to the end of the current move.
REP_DIST	Contains or sets the repeat distance.
REP_OPTION	Controls the application of the REP_DIST axis parameter.
REV_IN	Contains the input number to be used as a reverse limit input.
REV_JOG	Contains the input number to be used as a jog reverse input.
RS_LIMIT	Contains the absolute position of the reverse software limit.
S_REF	Contains the speed reference value which is applied when the axis is in open loop.
S_REF_OUT	Contains the speed reference value being applied to the Servo Drive for both open as closed loop.
SERVO	Determines whether the axis runs under servo control or open loop.
SPEED	Contains the demand speed in units/s.
SPEED_SIGN	Configures the voltage range of the analog speed reference output of the TJ1-FL02.
SRAMP	Contains the S-curve factor.
START_DIR_LAST	Defines the start direction in radians of the last programmed forced speed move of 2 or more axes.

Name	Description
STOP_ANGLE	Defines the angle change in radians above which an X-Y system should decelerate to zero speed.
SYNC_CONTROL	Returns the current **SYNC** state of the axis
SYNC_TIMER	Returns the elapsed time of the synchronisation or re-synchronisation phase.
TOOL_OFFSET	Parameter to adjust the position of a coordinate system to align with a tool point.
T_REF	Contains the torque reference value which is applied to the servo motor.
TABLE_POINTER	Parameter to determine which **TABLE** memory location is currently being used by the **CAM**.
TANG_DIRECTION	Parameter returns the angle in radians that represents the vector direction of the interpolated axes.
TRANS_DPOS	Contains axis demand position at output of frame transformation.
UNIT_INIT	Contains the unit conversion factor.
VECTOR_BUFFERED	Holds the total vector length of the buffered moves.
USER_FRAME	To allow to program in a different coordinate system.
USER_FRAMEB	Defines the new **USER_FRAME** to resynchronise to when performing the **SYNC**(20) operation.
VFF_GAIN	Contains the speed feed forward control gain.
	Contains the speed profile speed.

3.1.3 Communication commands and parameters

Name	Description
FINS_COMMS	Sends FINS Read Memory and Write Memory to a designated FINS server unit.
GET	Waits for the arrival of a single character and assigns the ASCII code of the character to variable.
HLM_COMMAND	Executes a specific Host Link command to the Slave.
HLM_READ	Reads data from the Host Link Slave to either VR or TABLE variable array.
HLM_STATUS	Represents the status of the last Host Link Master command.
HLM_TIMEOUT	Defines the Host Link Master timeout time.
HLM_WRITE	Writes data to the Host Link Slave from either VR or TABLE variable array.
HLS_NODE	Defines the Slave unit number for the Host Link Slave protocol.
INDEVICE	Parameter defines the default input device.
INPUT	Waits for a string to be received and assigns the numerical value to variable.
KEY	Returns TRUE or FALSE depending on if character is received.
LINPUT	Waits for a string and puts it in VR variables.
OUTDEVICE	Defines the default output device.
PRINT	Outputs a series of characters to a serial port.
SETCOM	Sets the serial communications.

3.1.4 Constants

Name	Description
FALSE	Equal to the numerical value 0.
OFF	Equal to the numerical value 0.

Name	Description
ON	Equal to the numerical value 1.
PI	Equal to the numerical value 3.1416.
TRUE	Equal to the numerical value -1.

3.1.5 I/O commands, functions and parameters

Name	Description
AIN	Holds the value of the analog channel.
AOUT	Holds the value of the analog channel.
HW_PSWITCH	Sets on and off the hardware switch on output 0 of the TJ1-FL02 when predefined positions are reached.
IN	Returns the value of digital inputs.
OP	Sets output(s) and allows the state of the first 32 outputs to be read back.
PSWITCH	Turns on an output when a predefined position is reached, and turns off the output when a second position is reached.
READ_OP	Returns the value of the digital outputs.

3.1.6 Mathematical functions and operands

Name	Description
+ (ADDITION)	Adds two expressions.
- (SUBTRACTION)	Subtracts two expressions.
*** (MULTIPLICATION)**	Multiplies two expressions.
/ (DIVISION)	Divides two expressions.
^ (POWER)	Takes the power of one expression to the other expression.
= (IS EQUAL TO)	Checks two expressions to see if they are equal.
= (ASSIGNMENT)	Assigns an expression to a variable.
<> (IS NOT EQUAL TO)	Checks two expressions to see if they are different.
> (IS GREATER THAN)	Checks two expressions to see if the expression on the left is greater than the expression on the right.
>= (IS GREATER THAN OR EQUAL TO)	Checks two expressions to see if the expression on the left is greater than or equal to the expression on the right.
< (IS LESS THAN)	Checks two expressions to see if the expression on the left is less than the expression on the right.
<= (IS LESS THAN OR EQUAL TO)	Checks two expressions to see if the expression on the left is less than or equal to the expression on the right.
ABS	Returns the absolute value of an expression.
ACOS	Returns the arc-cosine of an expression.
AND	Performs an AND operation on corresponding bits of the integer parts of two expressions.
ASIN	Returns the arc-sine of an expression.
ATAN	Returns the arc-tangent of an expression.
ATAN2	Returns the arc-tangent of the non-zero complex number made by two expressions.
B_SPLINE	Expands the profile stored in **TABLE** memory using the B-Spline mathematical function.
COS	Returns the cosine of an expression.
EXP	Returns the exponential value of an expression.
FRAC	Returns the fractional part of an expression.
IEEE_IN	Returns floating point number in IEEE format, represented by 4 bytes.
IEEE_OUT	Returns single byte extracted from the floating point number in IEEE format.
INT	Returns the integer part of an expression.
LN	Returns the natural logarithm of an expression.
MOD	Returns the modulus of two expressions.

Name	Description
NOT	Performs a NOT operation on corresponding bits of the integer part of the expression.
OR	Performs an OR operation between corresponding bits of the integer parts of two expressions.
SGN	Returns the sign of an expression.
SIN	Returns the sine of an expression.
SQR	Returns the square root of an expression.
TAN	Returns the tangent of an expression.
USER_FRAME_TRANS	
XOR	Performs an XOR function between corresponding bits of the integer parts of two expressions.

3.1.7 Program commands

Name	Description
' (COMMENT FIELD)	Enables a line not to be executed.
: (STATEMENT SEPARATOR)	Enables more statements on one line.
AUTORUN	Starts all the programs that have been set to run at start-up.
COMPILE	Compiles the current program.
COPY	Copies an existing program in the motion controller to a new program.
DEL	Deletes a program from the motion controller.
DIR	Displays a list of the programs in the motion controller, their size and their RUNTYPE on the standard output.
LIST	Prints the program on the standard output.
NEW	Deletes all lines of the program in the motion controller.

Name	Description
PROCESS	Returns the running status and task number for each current task.
RENAME	Changes the name of a program in the motion controller.
RUN	Executes a program.
RUNTYPE	Determines if a program is run at start-up, and which task it is to run on.
SELECT	Specifies the current program.
STEPLINE	Executes a single line in a program.
STOP	Halts program execution.
TROFF	Suspends a trace at the current line and resumes normal program execution.
TRON	Creates a breakpoint in a program.

3.1.8 Program control commands

Name	Description
FOR..TO..STEP..NEXT	Loop allows a program segment to be repeated with increasing/decreasing variable.
GOSUB..RETURN	Jumps to a subroutine at the line just after label. The program execution returns to the next instruction after a **RETURN**.
GOTO	Jumps to the line containing the label.
IF..THEN..ELSE..ENDIF	Controls the flow of the program base on the results of the condition.
ON.. GOSUB or **ON.. GOTO**	Enables a conditional jump to one of several labels.
REPEAT..UNTIL	Loop allows the program segment to be repeated until the condition becomes **TRUE**.
WHILE..WEND	Loop allows the program segment to be repeated until the condition becomes **FALSE**.

3.1.9 Slot parameters and modifiers

Name	Description
ALL	Is a modifier that specifies that all items in the controller are concerned.
COMMSTYPE	Contains the type of unit in a controller slot.
FPGA_VERSION	Returns the FPGA version of a unit.
SLOT	Is a modifier that specifies slot number of unit.

3.1.10 System commands and functions

Name	Description
$ (HEXADECIMAL INPUT)	Assigns a hexadecimal number to a variable.
AXIS	Sets the axis for a command, axis parameter read, or assignment to a particular axis.
AXIS_OFFSET	Defines the axis offset per unit when axes are assigned.
BASICERROR	Is used to run a specific routine when an error occurs in a BASIC command.
CAN_CORT	Configures the TJ1-CORT for data exchange, or returns the status of the TJ1-CORT.
CLEAR	Clears all global variables and the local variables on the current task.
CLEAR_BIT	Clears the specified bit of the specified VR variable.
CLEAR_PARAMS	Clears all parameters and variables stored in Flash-ROM to their default values.
CO_READ	Command to read a CANopen object from an EtherCAT device.
CO_READ_AXIS	Command to read a CANopen object from an EtherCAT axis.
CO_WRITE	Command to write a CANopen object of an EtherCAT device.
CO_WRITE_AXIS	Command to write a CANopen object of an EtherCAT axis.

Name	Description
CONSTANT	Declares a constant for use in BASIC program.
CRC16	Calculates the 16 bit CRC of data stored in contiguous TABLE or VR Memory locations.
DATE$	Prints the current date as a string.
DAY$	Prints the current day as a string
DEVICENET	Configures the TJ1-DRT (DeviceNet Slave Unit) for data exchange, or returns the data exchange status of the TJ1-DRT.
ETHERNET	Reads and sets various parameters of TJ2-MC__ Ethernet port.
EX	Resets the controller.
FLASHVR	Copies user data in RAM to and from the permanent Flash memory.
FREE	Returns the amount of available memory.
GLOBAL	Declares a reference to one of VR variables.
HALT	Stops execution of all programs currently running.
HEX	Used in a print statement to output a number in hexadecimal format.
INCLUDE	Resolves all local variable definitions in the included file at compile time and allows all the local variables to be declared “globally”.
INITIALISE	Sets all axes and parameters to their default values.
INTEGER_READ	Splits a 64 bit variable in 2 32 bit values and copies these values to 2 other variables.
INVERT_IN	Inverts input channels 0 - 31 in the software.
INVERTER_COMMAND	Reads I/O and clears alarm of the Inverter.
INVERTER_READ	Reads parameter, alarm, speed and torque reference of the Inverter.
INVERTER_WRITE	Writes to parameter, speed and torque reference of the Inverter.
LIST_GLOBAL	Shows all GLOBAL and CONSTANT variables.
LOCK	Prevents the programs from being viewed or modified.

Name	Description
PROFIBUS	Configures the TJ1-PRT (PROFIBUS-DP Slave Unit) to exchange I/O data with the master and returns the status of the TJ1-PRT.
READ_BIT	Returns the value of the specified bit in the specified VR variable.
RESET	Resets all local variables on a task.
SCOPE	Programs the system to automatically store up to 4 parameters every sample period to the TABLE variable array.
SET_BIT	Sets the specified bit in the specified VR variable to one.
TABLE	Writes and reads data to and from the TABLE variable array.
TABLEVALUES	Returns list of values from the TABLE memory.
TIME$	Prints the current time as a string.
TRIGGER	Starts a previously set **SCOPE** command.
UNIT_CLEAR	Clears the error of the specified unit.
UNIT_INIT	Initialises the specified unit.
VR	Writes and reads data to and from the global (VR) variables.
VRSTRING	Combines VR memory values so they can be printed as a string.
WA	Holds program execution for the number of milliseconds specified.
WAIT IDLE	Suspends program execution until the base axis has finished executing its current move and any buffered move.
WAIT LOADED	Suspends program execution until the base axis has no moves buffered ahead other than the currently executing move.
WAIT UNTIL	Repeatedly evaluates the condition until it is **TRUE**.

3.1.11 System parameters

Name	Description
ADDRESS	Sets the ModbusRTU multidrop address for the controller
BATTERY_LOW	Returns the current status of the battery condition.
CHECKSUM	Contains the checksum for the programs in RAM.
COMMSERROR	Contains all the communications errors that have occurred since the last time that it was initialised.
CONTROL	Contains the type of TJ2-MC__ in the system.
CORNER_MODE	Allows the program to control the cornering action.
D_ZONE_MAX	Controls the DAC output in conjunction with the Following Error value.
D_ZONE_MIN	Controls the DAC output in conjunction with the Following Error value.
DATE	Sets or returns the current date held by the real time clock.
DAY	Sets or returns the current day.
DISPLAY	Determines I/O channels to be displayed on the front panel LEDs.
ERROR_AXIS	Contains the number of the axis which caused the motion error.
IO_STATUS	Contains the status of an EtherCAT IO device.
IO_STATUSMASK	Contains the mask for the **IO_STATUS** parameter of an EtherCAT IO device.
LAST_AXIS	Contains the number of the last axis processed by the system.
LIMIT_BUFFERED	Contains the maximum number of move buffers available in the system.
MOTION_ERROR	Contains an error flag for axis motion errors.
N_ANA_IN	Returns the number of analogue inputs connected on the MECHATROLINK-II or EtherCAT network.
N_ANA_OUT	Returns the number of analogue outputs connected on the MECHATROLINK-II or EtherCAT network.
NEG_OFFSET	Applies a negative offset to the DAC signal from the servo loop.
NIN	Contains the number of inputs connected to the system.
NIO	Contains the maximum of the number of inputs and outputs connected to the system.

Name	Description
NOP	Contains the number of outputs connected to the system.
POS_OFFSET	Applies a positive offset to the DAC signal from the servo loop.
SCOPE_POS	Contains the current TABLE position at which the SCOPE command is currently storing its first parameter.
SERVO_PERIOD	Sets the servo cycle period of the TJ2-MC__.
SYSTEM_ERROR	Contains the system errors since the last initialization.
TIME	Returns the current time held by the real time clock.
TSIZE	Returns the size of the currently defined Table.
UNIT_DISPLAY	Parameter to enable different data to be displayed by the LEDs on the front cover of the TJ2-ECT__ unit.
UNIT_ERROR	Returns a bitfield indicating which units are in error.
VERSION	Returns the version number of the controller firmware.
WDOG	The software switch that enables Servo Drives.

3.1.12 Task commands and parameters

Name	Description
ERROR_LINE	Contains the number of the line which caused the last BASIC program error.
PMOVE	Contains the status of the task buffers.
PROC	Lets a process parameter from a particular process to be accessed.
PROC_STATUS	Returns the status of the process specified.
PROCNUMBER	Contains the number of the task in which the currently selected program is running.
RUN_ERROR	Contains the number of the last BASIC error that occurred on the specified task.
TICKS	Contains the current count of the task clock pulses.

3.2 All BASIC commands

3.2.1 + (Addition)

Type	Mathematical function
Syntax	**expression1 + expression2**
Description	The operator **+** adds two expressions.
Arguments	• **expression1** Any valid BASIC expression. • **expression2** Any valid BASIC expression.
Example	**result = 4 + 3** Assigns the value 7 to the variable **result**.
See also	N/A

3.2.2 - (Subtraction)

Type	Mathematical function
Syntax	**expression1 - expression2**
Description	The operator **-** subtracts **expression2** from **expression1**.
Arguments	• **expression1** Any valid BASIC expression. • **expression2** Any valid BASIC expression.
Example	**result = 10 - 2** Assigns the value 8 to the variable **result**.
See also	N/A

3.2.3 * (Multiplication)

Type	Mathematical function
Syntax	**expression1 * expression2**
Description	The operator ***** multiplies two expressions.
Arguments	• **expression1** Any valid BASIC expression. • **expression2** Any valid BASIC expression.
Example	**result = 3 * 7** Assigns the value 21 to the variable **result**.
See also	N/A

3.2.4 / (Division)

Type	Mathematical function
Syntax	**expression1 / expression2**
Description	The operator **/** divides **expression1** by **expression2**.
Arguments	• **expression1** Any valid BASIC expression. • **expression2** Any valid BASIC expression.
Example	**result = 11 / 4** Assigns the value 2.75 to the variable **result**.
See also	N/A

3.2.5 ^ (Power)

Type	Mathematical function
Syntax	**expression1 ^ expression2**
Description	The power operator **^** raises **expression1** to the power of **expression2**. This operation uses floating point algorithms and may give small deviations for integer calculations.
Arguments	• **expression1** Any valid BASIC expression. • **expression2** Any valid BASIC expression.
Example	**result = 2^5** Assigns the value 32 to the variable **result**.
See also	N/A

3.2.6 = (Is equal to)

Type	Mathematical function
Syntax	**expression1 = expression2**
Description	The operator **=** returns **TRUE** if **expression1** is equal to **expression2**, otherwise it returns **FALSE**.
Arguments	• **expression1** Any valid BASIC expression. • **expression2** Any valid BASIC expression.
Example	**IF a = 10 THEN GOTO label1** If variable **a** contains a value equal to 10, program execution continues at label **label1**. Otherwise, program execution continues with the next statement.
See also	N/A

3.2.7 = (Assignment)

Type	Mathematical function
Syntax	**variable = expression**
Description	The operator **=** assigns the value of the expression to the variable.
Arguments	• **variable** A variable name. • **expression** Any valid BASIC expression.
Example	**var = 18** Assigns the value 18 to the variable **var**.
See also	N/A

3.2.8 <> (Is not equal to)

Type	Mathematical function
Syntax	**expression1 <> expression2**
Description	The operator **<>** returns **TRUE** if **expression1** is not equal to **expression2**, otherwise it returns **FALSE**.
Arguments	• **expression1** Any valid BASIC expression. • **expression2** Any valid BASIC expression.
Example	**IF a <> 10 THEN GOTO label1** If variable **a** contains a value not equal to 10, program execution continues at label **label1**. Otherwise, program execution continues with the next statement.
See also	N/A

3.2.9 > (Is greater than)

Type	Mathematical function
Syntax	**expression1 > expression2**
Description	The operator **>** returns **TRUE** if **expression1** is greater than **expression2**, otherwise it returns **FALSE**.
Arguments	• **expression1** Any valid BASIC expression. • **expression2** Any valid BASIC expression.
Example	**IF a > 10 THEN GOTO label1** If variable **a** contains a value greater than 10, program execution continues at label **label1**. Otherwise, program execution continues with the next statement.
See also	N/A

3.2.10 >= (Is greater than or equal to)

Type	Mathematical function
Syntax	**expression1 >= expression2**
Description	The operator **>=** returns **TRUE** if **expression1** is greater than or equal to **expression2**, otherwise it returns **FALSE**.
Arguments	• **expression1** Any valid BASIC expression. • **expression2** Any valid BASIC expression.
Example	**IF a >=10 THEN GOTO label1** If variable **a** contains a value greater than or equal to 10, program execution continues at label **label1**. Otherwise, program execution continues with the next statement.
See also	N/A

3.2.11 < (Is less than)

Type	Mathematical function
Syntax	**expression1 < expression2**
Description	The operator **<** returns **TRUE** if **expression1** is less than **expression2**, otherwise it returns **FALSE**.
Arguments	• **expression1** Any valid BASIC expression. • **expression2** Any valid BASIC expression.
Example	**IF a < 10 THEN GOTO label1** If variable **a** contains a value less than 10, program execution continues at label **label1**. Otherwise, program execution continues with the next statement.
See also	N/A

3.2.12 <= (Is less than or equal to)

Type	Mathematical function
Syntax	**expression1 <= expression2**
Description	The operator **<=** returns **TRUE** if **expression1** is less than or equal to **expression2**, otherwise it returns **FALSE**.
Arguments	• **expression1** Any valid BASIC expression. • **expression2** Any valid BASIC expression.
Example	**IF a <= 10 THEN GOTO label1** If variable **a** contains a value less than or equal to 10, program execution continues at label **label1**. Otherwise, program execution continues with the next statement.
See also	N/A

3.2.13 $ (Hexadecimal input)

Type	System command
Syntax	**$hex_num**
Description	The **$** command makes the number that follows a hexadecimal number.
Arguments	• **hex_num** A hexadecimal number (consisting of the characters 0 - 9 and A - F). **hex_num** ranges from 0 to 1FFFFFFFFFFFFF.
Example	**>>TABLE(0, $F, $ABCD)** **>>print TABLE(0), TABLE(1)** **15.0000 43981.0000**
See also	**HEX (PRINT)**

3.2.14 ' (Comment field)

Type	Program command
Syntax	**'**
Description	**'** marks all that follows it on a line as comment and not program code. Comment is not executed when the program is run. You can use **'** at the beginning of a line or after a valid statement.
Arguments	N/A
Example	**' This line is not printed** **PRINT "Start"**
See also	N/A

3.2.15 : (Statement separator)

Type	Program command
Syntax	**:**
Description	The statement separator **:** separates multiple BASIC statements on one line. You can use it on the command line and in programs.
Arguments	N/A
Example	**PRINT "THIS LINE": GET low : PRINT "DOES THREE THINGS"**
See also	N/A

3.2.16

Type	Special character
Syntax	**#**
Description	The **#** symbol is used to specify a communications channel to be used for serial input/output commands. Note: Communications Channels greater than 3 will only be used when running the Trajexia Studio software.
Arguments	N/A
Example	**PRINT #1, "RS232"** **PRINT #2, "RS485"**
Example	**IF KEY #1 THEN GET #1, k** Checks keypad on RS232 port, which represent communication channel 1.
See also	N/A

3.2.17 ABS

Type	Mathematical function
Syntax	**ABS(expression)**
Description	The **ABS** function returns the absolute value of an expression.
Arguments	• **expression** Any valid BASIC expression.
Example	**IF ABS(A) > 100 THEN PRINT "A is outside range -100 ... 100"**
See also	N/A

3.2.18 ACC

Type	Axis command
Syntax	**ACC(rate)**
Description	Sets the acceleration and deceleration at the same time. This command gives a quick method to set both **ACCEL** and **DECEL**. Acceleration and deceleration rates are recommended to be set with the **ACCEL** and **DECEL** axis parameters.
Arguments	• **rate** The acceleration/deceleration rate in units/s^2. You can define the units with the **UNITS** axis parameter.
Example	**ACC(100)** Sets **ACCEL** and **DECEL** to 100 units/s^2.
See also	**ACCEL**, **DECEL**, **UNIT_INIT**

3.2.19 ACCEL

Type	Axis parameter
Syntax	**ACCEL = expression**
Description	The **ACCEL** axis parameter contains the axis acceleration rate. The rate is set in units/s^2. The parameter can have any positive value including zero.
Arguments	N/A
Example	**BASE(0)** **ACCEL = 100 ' Set acceleration rate** **PRINT "Acceleration rate: "; ACCEL; " mm/s/s"** **ACCEL AXIS(2) = 100 ' Sets acceleration rate for axis (2)**
See also	**ACCEL**, **DECEL**, **UNIT_INIT**

3.2.20 ACOS

Type	Mathematical function
Syntax	**ACOS(expression)**
Description	The **ACOS** function returns the arc-cosine of the expression. The expression value must be between -1 and 1. The result in radians is between 0 and PI. Input values outside the range will return 0.
Arguments	• **expression** Any valid BASIC expression.
Example	**>> PRINT ACOS(-1)** **3.1416**
See also	N/A

3.2.21 ADD_DAC

Type Axis command

Syntax **ADD_DAC(axis)**

Description The **ADD_DAC** command adds the **DAC_OUT** value of **axis** to the **DAC_OUT** value of the base axis. Use **ADD_DAC(-1)** to cancel the sum. **ADD_DAC** works on the default basis axis (set with **BASE**) unless **AXIS** is used to specify a temporary base axis.

Note:

1. Be aware that the control loop gains for both axes need to be determined with care. As different encoders with different resolutions are used, the gains are not identical.
2. Set the **OUTLIMIT** parameter to the same value for both linked axes.
3. This command has no meaning for axis in position mode, because the value of **DAC_OUT** is ignored.

fig. 1

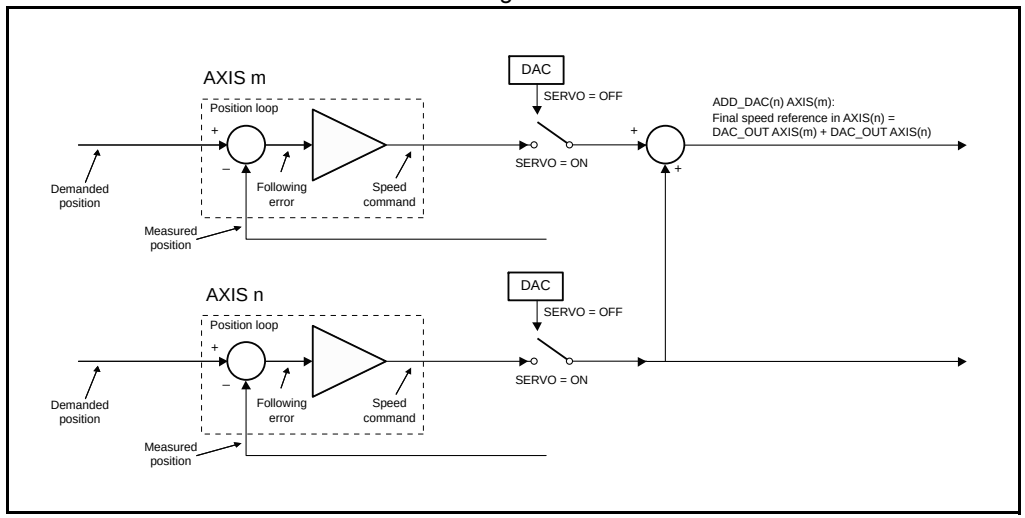

Arguments

- **axis**
  The axis from which to sum the speed reference output to the base axis. Set the argument to -1 to cancel the link and return to normal operation.

Example No example.

See also **AXIS**, **DAC_OUT**, **OUTLIMIT**

3.2.22 ADDAX

Type	Axis command
Syntax	**ADDAX(axis)**
Description	The **ADDAX** command is used to superimpose two or more movements to build up a more complex movement profile. The **ADDAX** command takes the demand position changes from the superimposed axis as specified by the axis argument and adds them to any movement running on the axis to which the command is issued. The axis specified by the parameter can be any axis and does not have to physically exist in the system. The **ADDAX** command therefore allows an axis to perform the moves specified on two axes added together. When the axis parameter is set to OFF on an axis with an encoder interface the measured position **MPOS** is copied into the demanded position **DPOS**. This allows **ADDAX** to be used to sum encoder inputs. After the **ADDAX** command has been issued the link between the two axes remains until broken. Use **ADDAX(-1)** to cancel the axis link. **ADDAX** allows an axis to perform the moves specified for 2 axes added together. Combinations of more than two axes can be made by applying **ADDAX** to the superimposed axis as well. **ADDAX** works on the default basis axis (set with **BASE**) unless **AXIS** is used to specify a temporary base axis. Note: The **ADDAX** command sums the movements in encoder edge units.
Arguments	• **axis** The axis to be set as a superimposed axis. Set the argument to -1 to cancel the link and return to normal operation.

Example

```
UNITS AXIS(0)=1000
UNITS AXIS(1)=20
' Superimpose axis 1 on axis 0
ADDAX(1) AXIS(0)
MOVE(1) AXIS(0)
MOVE(2) AXIS(1)
'Axis 0 will move 1*1000+2*20=1040 edges
```

fig. 2

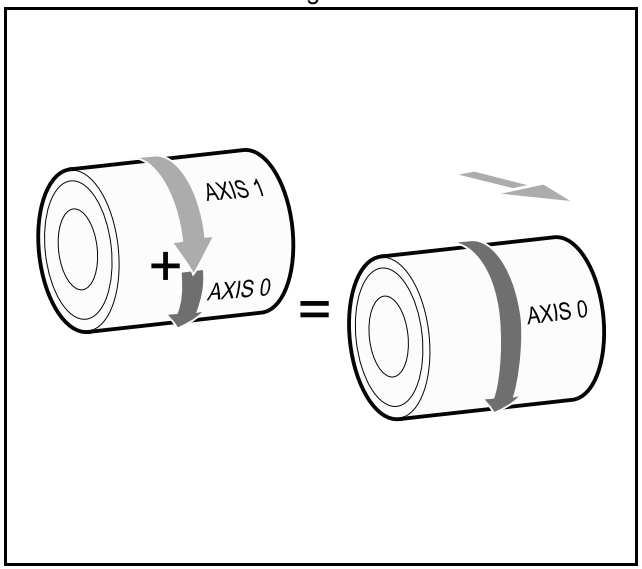

Example

Pieces are placed randomly onto a belt that moves continuously. Further along the line they are transferred to a second flighted belt. A detection system indicates if a piece is in front of or behind its nominal position, and how far.

```
expected=2000 ' sets expected position
BASE(0)
ADDAX(1)
CONNECT(1,2) ' continuous geared connection to flighted belt
REPEAT
  GOSUB getoffset ' get offset to apply
  MOVE(offset) AXIS(1) ' make correcting move on virtual axis
UNTIL IN(2)=OFF ' repeat until stop signal on input 2
RAPIDSTOP
ADDAX(-1) ' clear ADDAX connection
STOP
getoffset: ' sub routine to register the position of the
  ' piece and calculate the offset
BASE(0)
REGIST(3)
WAIT UNTIL MARK
seenat=REG_POS
offset=expected-seenat
RETURN
```

Axis 0 in this example is connected to the encoder of the second conveyor. A superimposed **MOVE** on axis 1 is used to apply offsets.

fig. 3

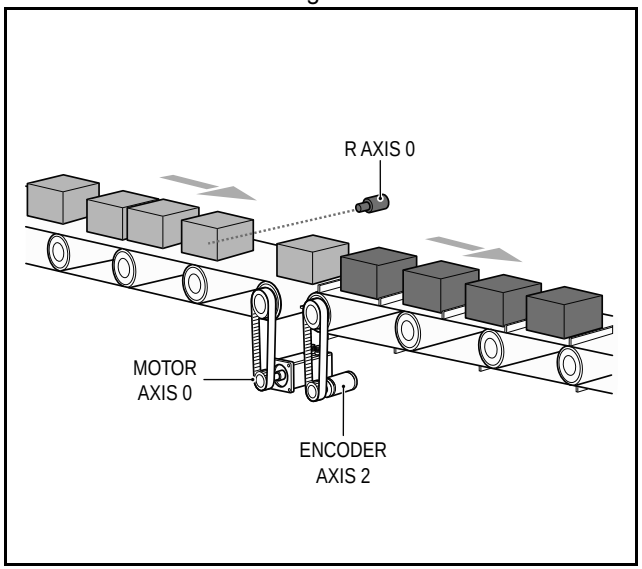

Example

An X-Y marking machine must mark boxes as they move along a conveyor. Using CONNECT enables the X marking axis to follow the conveyor. A virtual axis is used to program the marking absolute positions; this is then superimposed onto the X axis using ADDAX.

```
ATYPE AXIS(3)=0 'set axis 3 as virtual axis
SERVO AXIS(3)=ON
DEFPOS(0) AXIS(3)
ADDAX (3)AXIS(0) 'connect axis 3 requirement to axis 0
WHILE IN(2)=ON
  REGIST(3) 'registration input detects a box on the conveyor
  WAIT UNTIL MARK OR IN(2)=OFF
  IF MARK THEN
    CONNECT(1,2) AXIS(0)'connect axis 0 to the moving belt
    BASE(3,1) 'set the drawing motion to axis 3 and 1
    'Draw the M
    MOVEABS(1200,0)'move A > B
    MOVEABS(600,1500)'move B > C
    MOVEABS(1200,3000)' move C > D
    MOVEABS(0,0)'move D > E
    WAIT IDLE
    BASE(0)
    CANCEL 'stop axis 0 from folowing the belt
    WAIT IDLE
    MOVEABS(0) 'move axis 0 to home position
  ENDIF
WEND
CANCEL
```

fig. 4

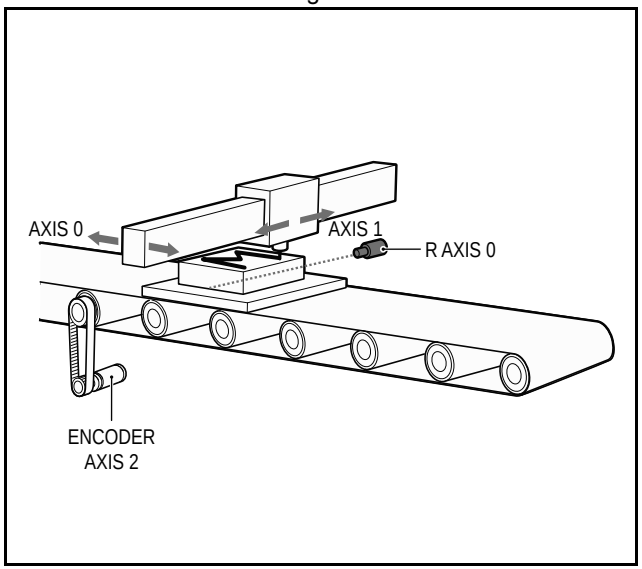

See also **ADDAX_AXIS**, **AXIS**, **OUTLIMIT**

WARNING

Beware that giving several **ADDAX** commands in a system can create a dangerous loop when for instance one axis is linked to another and vice versa. This may cause instability in the system.

3.2.23 ADDAX_AXIS

Type	Axis parameter (read-only)
Syntax	**ADDAX_AXIS**
Description	The **ADDAX_AXIS** axis parameter returns the number of the axis to which the base axis is currently linked to by **ADDAX**. If the base axis in not linked to any other axis, the **ADDAX_AXIS** parameter returns -1.
Arguments	N/A
Example	**>> BASE(0)** **>> ADDAX(2)** **>> PRINT ADDAX_AXIS** **2.0000** **>> ADDAX(-1)** **>> PRINT ADDAX_AXIS** **-1.0000**
See also	**ADDAX**, **AXIS**

3.2.24 ADDRESS

Type	SYSTEM parameter
Syntax	**ADDRESS**
Description	Sets the RS-232 and RS485/422 ModbusRTU multidrop address for the controller. This parameter should be in the range of [1 – 32].
Arguments	N/A
Example	**ADDRESS = 5**
See also	**SETCOM**

3.2.25 AIN

Type	I/O command
Syntax	**AIN(analogue_chan)**
Description	The AIN reads a value from an analogue input. Analogue input channels are provided by connecting GRT1-ML2 SmartSlice Coupler to the MECHATROLINK-II network or GRT1-ECT to the EtherCAT network.
Arguments	**analogue_chan**. Analogue input channel number 0.31
Example	**MOVE(-5000)** **REPEAT** **a=AIN(1)** **IF a<0 THEN a=0** **SPEED=a*0.25** **UNTIL MTYPE=0** The speed of a production line is governed by the rate at which material is fed onto it. The material feed is via a lazy loop arrangement which is fitted with an ultra-sonic height sensing device. The output of the ultra-sonic sensor is in the range 0V to 4V where the output is at 4V when the loop is at its longest. Note: The analogue input value is checked to ensure it is above zero even though it always should be positive. This is to allow for any noise on the incoming signal which could make the value negative and cause an error because a negative speed is not valid for any move type except **FORWARD** or **REVERSE**.
See also	N/A

3.2.26 ALL

Type	Slot modifier
Syntax	**ALL**
Description	The ALL modifier is used with the commands **DEL** and **NEW**. It indicates that these commands are applied to all items in the directory structure of the controller.

Arguments N/A

Example **DEL ALL**
This deletes all programs and the TABLE memory of the controller.

Example **HALT**
NEW ALL
STORE
This creates the memory of the controller.

See also **DEL**, **NEW**.

3.2.27 AND

Type Mathematical operation

Syntax **expression1 AND expression2**

Description The **AND** operator performs the logical **AND** function on the corresponding bits of the integer parts of two valid BASIC expressions.
The logical **AND** function between two bits is defined as follows:
0 AND 0 = 0
0 AND 1 = 0
1 AND 0 = 0
1 AND 1 = 1

Arguments
- **expression1**
  Any valid BASIC expression.
- **expression2**
  Any valid BASIC expression.

Example **VR(0) = 10 AND (2.1*9)**
The parentheses are evaluated first, but only the integer part of the result, 18, is used for the **AND** operation. Therefore, this expression is equivalent to the following:
VR(0) = 10 AND 18
The **AND** is a bit operator and so the binary action is as follows:
01010 AND 10010 = 00010
Therefore, **VR(0)** will contain the value 2.

Example **IF MPOS AXIS(0) > 0 AND MPOS AXIS(1) > 0 THEN GOTO cycle1**
If measured positions **MPOS** of both axis 1 and axis 2 are greater than zero, program execution continues at label **cycle1**. Otherwise, program execution continues with the next statement.

See also N/A

3.2.28 AOUT

Type I/O command

Syntax **AOUT(analogue_chan)**

Description The AOUT command sets the output value of the analogue output channels that are provided by connecting GRT1-ML2 SmartSlice Coupler to the MECHATROLINK-II network or GRT1-ECT SmartSlice coupler to the EtherCAT network. The range of the value set is [-32000, 32000] for full output range. The output range depends on the analogue unit used and can be one of the following: [-10V, 10V], [0V, 10V] or [0V, 5V] for voltage and [0mA, 20mA] or [4mA, 20mA] for current output.

Arguments
- **analogue_chan**.
  Analogue output channel number 0.31

Example No example.

See also N/A

3.2.29 ASIN

Type Mathematical function

Syntax **ASIN(expression)**

Description The **ASIN** function returns the arc-sine of the argument. The argument must have a value between -1 and 1. The result in radians is between -PI/2 and PI/2. Input values outside this range return 0.

Arguments
- **expression**
  Any valid BASIC expression.

Example **>> PRINT ASIN(-1)**
-1.5708

See also N/A

3.2.30 ATAN

Type Mathematical function

Syntax **ATAN(expression)**

Description The **ATAN** function returns the arc-tangent of the argument. **expression** can have any value. The result is in radians and is between -PI/2 and PI/2.

Arguments
- **expression**
  Any valid BASIC expression.

Example **>> PRINT ATAN(1)**
0.7854

See also N/A

3.2.31 ATAN2

Type Mathematical function

Syntax **ATAN2(expression1, expression2)**

Description The **ATAN2** function returns the arc-tangent of the non-zero complex number **(expression1, expression2)**, which is equivalent to the angle between a point with coordinate **(expression1, expression2)** and the x-axis. If **expression2 >= 0**, the result is equal to the value of **ATAN(expression1 / expression2)**. The result in radians will be between -PI and PI.

Arguments
- **expression1**
  Any valid BASIC expression.
- **expression2**
  Any valid BASIC expression.

Example **>> PRINT ATAN2(0,1)**
0.0000

See also N/A

3.2.32 ATYPE

Type Axis parameter

Syntax **ATYPE = value**

Description The **ATYPE** axis parameter indicates the axis type for the axis. The valid values depend on Trajexia unit the Servo Drive controlling the axis is connected to. See the table below.

AXIS type	ATYPE value	Applicable Trajexia unit
Virtual	0	All
MECHATROLINK-II Position	40	TJ1-ML__
MECHATROLINK-II Speed	41	TJ1-ML__
MECHATROLINK-II Torque	42	TJ1-ML__
Flexible axis Stepper Out	43	TJ1-FL02 and TJ2-KS02
Flexible axis Servo	44	TJ1-FL02 and TJ2-KS02
Flexible axis Encoder Out	45	TJ1-FL02 and TJ2-KS02
Flexible axis Absolute Tamagawa	46	TJ1-FL02
Flexible axis Absolute EnDat	47	TJ1-FL02 and TJ2-KS02
Flexible axis Absolute SSI	48	TJ1-FL02 and TJ2-KS02
MECHATROLINK-II Inverter	49	TJ1-ML__
Flexible axis Stepper In	60	TJ1-FL02 and TJ2-KS02
EtherCAT position (CoE csp)	65	TJ2-ECT__
EtherCAT speed (CoE csv)	66	TJ2-ECT__
EtherCAT torque (CoE cst)	67	TJ2-ECT__
EtherCAT velocity (CoE vl)	68	TJ2-ECT__
EtherCAT encoder	69	TJ2-ECT__
Accurax G5-A/P Position	80	TJ2-KS02
Accurax G5-A/P Speed	81	TJ2-KS02
Accurax G5-A/P Torque	82	TJ2-KS02

The **ATYPE** parameters are set by the system at start-up. For Servo Drives connected to the system via MECHATROLINK-II, the default **ATYPE** value is 40 (MECHATROLINK-II Position). For Servo Drives connected to the system via EtherCAT, the default **ATYPE** value is 65 (CoE csp). For Inverters connected to the system via EtherCAT, the default **ATYPE** value is 68 (CoE vl). The default **ATYPE** for TJ1-FL02 and the encoder interface of TJ2-KS02 is 44 (Flexible Axis Servo). For Servo Drives connected to the system via the TJ2-KS02, the default **ATYPE** value is 80 (Accurax G5-A/P Position).

Arguments N/A

Example **ATYPE AXIS(1) = 45**
This command will set axis 1 as Flexible axis encoder output axis.

See also **AXIS**

3.2.33 AUTORUN

Type Program command

Syntax **AUTORUN**

Description The **AUTORUN** command starts all the programs that have been set to run at start-up.

Note: This command should only be used on the Command Line Terminal.

Arguments N/A

Example No example.

See also **RUNTYPE**

3.2.34 AXIS

Type System command

Syntax **AXIS(axis_number)**

Description The **AXIS** modifier sets the axis for a single motion command or a single axis parameter read/write to a particular axis. **AXIS** is effective only for the command or axis parameter operation. If it is required to change the axis used to a particular axis in every subsequent command, use the **BASE** command instead.

Arguments
- **axis_number**
  Any valid BASIC expression specifying the axis number.

Example **BASE(0)**
PRINT VP_SPEED AXIS(2)

Example **MOVE(300) AXIS(0)**

Example **REP_DIST AXIS(1) = 100**

See also **BASE**

3.2.35 AXIS_DISPLAY

Type Axis parameter

Syntax **AXIS_DISPLAY = value**

Description The **AXIS_DISPLAY** axis parameter enables different data to be displayed by the LEDs on the front cover of the TJ1-FL02 unit. LEDs affected by this parameter setting are two yellow LEDs showing axis status. The default value of this parameter on start-up for all axes is 0. The valid values are shown in the table below.

AXIS_DISPLAY value	**0**	**1**	**2**	**3**
A0	REG 0	AUX IN	OUT 0	ENCODER A
A1	REG 1	ENCODER Z[1]	OUT 1	ENCODER B
B0	REG 0	AUX IN	OUT 0	ENCODER A
B1	REG 1	ENCODER Z	OUT 1	ENCODER B

1. In case of incremental encoder, it reflects the status of the Z-input.
   In case of absolute encoder, it reflects the status of the clock output.

Arguments N/A

Example **AXIS_DISPLAY AXIS(2) = 2**
This command will display status of the outputs OUT 0 and OUT 1 allocated to axis 2.

See also N/A

3.2.36 AXIS_DPOS

Type Axis parameter (read-only)

Syntax **AXIS_DPOS**

Description **AXIS_DPOS** is the axis demand position at output of **FRAME** transformation. **AXIS_DPOS** is normally equal to **DPOS** on each axis. The frame transformation is therefore equivalent to 1:1 for each axis (**FRAME** = 0). For some machinery configurations it can be useful to install a frame transformation which is not 1:1, these are typically machines such as robotic arms or machines with parasitic motions on the axes. In this situation when **FRAME** is not zero **AXIS_DPOS** returns the demand position for the actual motor.
Note:
AXIS_DPOS can be scaled using **AXIS_UNITS**.

Arguments N/A

Example Return the axis position in user UNITS using the command line.
>>PRINT AXIS_DPOS
125.22
>>

See also **AXIS_UNITS**, **FRAME**

3.2.37 AXIS_ENABLE

Type Axis parameter

Syntax **AXIS_ENABLE = ON/OFF**

Description The **AXIS_ENABLE** axis parameter is used to enable or disable particular axis independently of others. This parameter can be set ON or OFF for each axis individually. The default value on start-up is ON for all axes. The axis will be enabled if both **AXIS_ENABLE** for that axis is ON and **WDOG** is on. For MECHATROLINK-II, EtherCAT and TJ2-KS02 axes setting **AXIS_ENABLE** to OFF will disable Servo Drive output to the motor. For Flexible axis Servo axis setting **AXIS_ENABLE** to OFF will force both voltage outputs to 0. For Flexible axis Stepper Out and Encoder Out axes, setting **AXIS_ENABLE** to OFF will block pulses generation on the outputs.

Arguments N/A

Example **AXIS_ENABLE AXIS(3) = OFF**
This command will disable axis 3 independently of other axes in the system.

See also **AXIS**, **DISABLE_GROUP**

3.2.38 AXIS_OFFSET

Type System parameter

Syntax **AXIS_OFFSET [SLOT(unit_number)] = offset_value**

Description Provides control over the position of axes (on a per unit basis) when they are assigned at system start-up. The offsets are stored in Flash-ROM of the TJ2-MC__ and will only become active after the next start-up of after re-initialization of the network. The offset specified will be added to the node address of MECHATROLINK-II, EtherCAT or TJ2-KS02 axes or will be used as a starting point to search for an unused axis in case of Flexible axes.

Arguments
- **unit_number**
  Unit numbers are 0 to 6, with 0 being the unit immediately to the right of the TJ2-MC__.
- **offset_value**
  Offset applied during axis number assignment for axes connected to the unit.

Example **AXIS_OFFSET SLOT(1)=16**
Axes connected to unit in slot 1 will be assigned from axis 16 upwards.

See also **SLOT**

WARNING
When using multiple TJ1-ML__ units, do not swap the MECHATROLINK-cables. This can result in a different axis allocation. This can result in serious injury and/or significant damage.

WARNING
AXIS_OFFSET is fixed to a unit number. Changing the position of the attached units can therefore result in a different axis allocation. This can result in serious injury and/or significant damage.

3.2.39 AXIS_FS_LIMIT

Type	Axis parameter
Syntax	**AXIS_FS_LIMIT**
Description	An axis end of travel limit may be set up in software thus allowing the program control of the working range of the axis. This parameter holds the absolute position of the forward travel limit in user **AXIS_UNITS**. Bit 16 of the **AXISSTATUS** register is set when the axis position is greater than the **AXIS_FS_LIMIT**. Axis software limits are only enabled when **FRAME**<>0 so that the user can limit the range of motion of the motor/ joint. ***Note***: When **AXIS_DPOS** reaches **AXIS_FS_LIMIT** the controller will **CANCEL** all moves on the **FRAME_GROUP**, the axis will decelerate at **DECEL** or **FAST_DEC**. Any **SYNC** is also stopped. As this software limit uses **AXIS_DPOS** it will require a negative change in **AXIS_DPOS** to move off the limit. This may not be a negative movement on **DPOS** due to the selected **FRAME** transformation. ***Tip***: **AXIS_FS_LIMIT** is disabled when it has a value greater than **REP_DIST** or when **FRAME**=0.
Arguments	N/A
Example	An arm on a robots joint can move 90degrees. The encoder returns 400 counts per revolution and there is a 50:1 gearbox **AXIS_UNITS=4000*50/360** **AXIS_FS_LIMIT=0** **AXIS_RS_LIMIT=90**
See also	**AXIS_DPOS**, **AXIS_RS_LIMIT**, **AXIS_UNITS**

3.2.40 AXIS_RS_LIMIT

Type	Axis parameter
Syntax	**AXIS_RS_LIMIT**
Description	An axis end of travel limit may be set up in software thus allowing the program control of the working range of the axis. This parameter holds the absolute position of the reverse travel limit in user **AXIS_UNITS**. Bit 17 of the **AXISSTATUS** register is set when the axis position is greater than the **AXIS_RS_LIMIT**. Axis software limits are only enabled when **FRAME**<>0 so that the user can limit the range of motion of the motor/ joint. ***Note:*** When **AXIS_DPOS** reaches **AXIS_RS_LIMIT** the controller will **CANCEL** all moves on the **FRAME_GROUP**, the axis will decelerate at **DECEL** or **FAST_DEC**. Any **SYNC** is also stopped. As this software limit uses **AXIS_DPOS** it will require a positive change in **AXIS_DPOS** to move off the limit. This may not be a positive movement on **DPOS** due to the selected **FRAME** transformation. ***Tip:*** **AXIS_RS_LIMIT** is disabled when it has a value greater than **REP_DIST** or when **FRAME**=0.
Arguments	N/A
Example	An arm on a robots joint can move 90 degrees. The encoder returns 400 counts per revolution and there is a 50:1 gearbox **AXIS_UNITS=4000*50/360** **AXIS_FS_LIMIT=0** **AXIS_RS_LIMIT=90**
See also	**AXIS_DPOS**, **AXIS_FS_LIMIT**, **AXIS_UNITS**

3.2.41 AXIS_UNITS

Type: Axis parameter

Syntax: **AXIS_UNITS**

Description: **AXIS_UNITS** is a conversion factor that allows the user to scale the edges/ stepper pulses to a more convenient scale. **AXIS_UNITS** is only used when a **FRAME** is active and only applies to the parameters in the axis coordinate system (after the **FRAME**). This includes **AXIS_DPOS**, **AXIS_FS_LIMIT**, **AXIS_RS_LIMIT** and **MPOS**.
Warning:
MPOS will use **UNITS** when **FRAME**=0 and **AXIS_UNITS** when **FRAME** <> 0

Arguments: N/A

Example: A motor on a robot has a 18bit encoder and uses an 18bit encoder and 31:1 ratio gearbox. To simplify reading AXIS_DPOS the user wants to use radians.
encoder_bits = 2^10
gearbox_ratio = 31
radians_conversion=2*PI
AXIS_UNITS=(encoder_bits * gearbox_ratio)/ radians_conversion

See also: **AXIS_DPOS**, **UNIT_INIT**

3.2.42 AXISSTATUS

Type: Axis parameter (read-only)

Syntax: **AXISSTATUS**

Description: The **AXISSTATUS** axis parameter contains the axis status and is used for the motion error handling of the controller. The axis status consists of status bits, which definitions are shown in the table below.

Bit number	Description	Value	Character (as used in Trajexia Studio)
0	-	1	-
1	Following error warning range	2	w
2	Servo Drive communication error	4	a
3	Servo Drive alarm	8	m
4	In forward limit	16	f
5	In reverse limit	32	r
6	Datuming	64	d
7	Feed hold input	128	h
8	Following error exceeds limit	256	e
9	In forward software limit	512	x
10	In reverse software limit	1024	y
11	Cancelling move	2048	c
12	Encoder out overspeed	4096	o
13	*Reserved*	8192	-
14	*Reserved*	16384	-
15	Three dimensional shape limit	32768	-
16	Axis end of forward travel limit	65536	-
17	Axis end of reverse travel limit	131072	-

Arguments: N/A

Example: **IF (AXISSTATUS AND 16)>0 THEN PRINT "In forward limit"**

See also: **AXIS**, **ERRORMASK**

3.2.43 B_SPLINE

Type	Mathematical function
Syntax	**B_SPLINE(type, data_in, number_in, data_out, expansion_ratio)**
Description	Expands an existing profile stored in the TABLE using the B-Spline mathematical function. The expansion factor is configurable and the B_SPLINE stores expanded profile to another area in the TABLE. This is ideally used where the source **CAM** profile is too course and needs to be extrapolated into a greater number of points.
Arguments	• **type** Reserved for future expansion. Always set this to 1. • **data_in** Location in the TABLE where the source profile is stored. • **number_in** Number of points in the source profile. • **data_out** Location in the TABLE where the expanded profile will be stored. • **expansion_ratio** The expansion ratio, i.e., if the source profile is 99 points and **expansion_ratio** is set to 10 the resulting profile will be 1000 point ((**number_in**+1) * **expansion_ratio**).
Example	**BASE(1)** **B_SPLINE(1, 0, 9, 200, 10)** This command expands a 10 point profile in TABLE locations 0 to 9 to a larger 100 points profile starting at TABLE location 200.
See also	N/A

3.2.44 BACKLASH

Type	Axis command
Syntax	**BACKLASH(ON/OFF, distance, speed, accel)**
Description	The **BACKLASH** command allows the parameters for the backlash compensation to be loaded. The backlash compensation is achieved as follows: • An offset move is applied when the motor demand is in one direction. • The offset move is reversed when the motor demand is in the opposite direction. These moves are superimposed on the command axis movements. The backlash compensation is applied after a change in the direction of the **DPOS** parameter. The backlash compensation can be seen in the **TRANS_DPOS** parameter, which is equal to **DPOS** + backlash compensation.
Arguments	• **ON/OFF** Either ON or OFF. • **distance** The offset distance, expressed in user units. • **speed** The speed of the compensation move, expressed in user units. • **accel** The acceleration or deceleration rate of the compensation move, expressed in user units.
Example	**BACKLASH(ON,0.5,10,50) AXIS(0)** **BACKLASH(ON,0.4,8,50) AXIS(1)** This applies backlash compensation on axes 0 and 1.
See also	**DPOS**, **TRANS_DPOS**.

3.2.45 BACKLASH_DIST

Type	Axis parameter
Syntax	**BACKLASH_DIST**
Description	**BACKLASH_DIST** is the amount of backlash compensation that is applied to the axis when **BACKLASH = ON**.
Arguments	N/A

Example	**IF BACKLASH_DIST>100 THEN**
	** OP (10, ON) ' show that backlash compensation reached this value**
	ELSE
	** OP (10, OFF)**
	END IF

See also	**BACKLASH**

3.2.46 BASE

Type	Axis command
Syntax	**BASE** **BASE(axis_1 [,axis_2 [, axis_3 [, axis_4 [, axis_...]]]])** **BA** **BA(axis_1 [,axis_2 [, axis_3 [, axis_4 [, axis_...]]]])**

Description

The **BASE** command is used to set the default base axis or to set a specified axis sequence group. All subsequent motion commands and axis parameters will apply to the base axis or the specified axis group unless the **AXIS** command is used to specify a temporary base axis. The base axis or axis group is effective until it is changed again with **BASE**.
Each BASIC process can have its own axis group and each program can set its own axis group independently. Use the **PROC** modifier to access the parameters for a certain task.
The **BASE** order grouping can be set by explicitly assigning the order of axes. This order is used for interpolation purposes in multi-axes linear and circular moves. The default for the base axis group is (0,1,2 ... 62,63) at start-up or when a program starts running on a task. The **BASE** command without any arguments returns the current base order grouping.
Note: If the **BASE** command does not specify all the axes, the **BASE** command will “fill in” the remaining values automatically. Firstly it will fill in any remaining axes above the last declared value, then it will fill in any remaining axes in sequence.
So **BASE(2,6,10)** sets the internal array of 64 axes to:
2,6,10,11,12,13,14,15 ... ,61,62,63,0,1,3,4,5,7,8,9.

Note: The **BASE** command without any arguments should only be used on the Command Line Terminal.

Arguments

The command can take up to 64 arguments.

- **axis_i**
  The number of the axis set as the base axis and any subsequent axes in the group order for multi-axis moves.

Note: The BASE array must use ascending values.

Example

BASE(1)
UNITS = 2000 ' Set unit conversion factor for axis 1
SPEED = 100 ' Set speed for axis 1
ACCEL = 5000 ' Set acceleration rate for axis 1
BASE(2)
UNITS = 2000 ' Set unit conversion factor for axis 2
SPEED = 125 ' Set speed for axis 2
ACCEL = 10000 ' Set acceleration rate for axis 2
It is possible to program each axis with its own speed, acceleration and other parameters.

Example **BASE(0)**
MOVE(100,-23.1,1250)
In this example, axes 0, 1 and 2 will move to the specified positions at the interpolated speed and acceleration set for axis 0. **BASE(0)** sets the base axis to axis 0, which determines the three axes used by **MOVE** and the speed and acceleration rate.

Example **>> BASE**
(0,2,1)
On the command line the base group order can be shown by typing **BASE**.

Example **>> RUN "PROGRAM", 3**
>> BASE PROC(3)
(0,2,1)
Use the **PROC** modifier to show the base group order of a certain task.

Example **>> BASE(2)**
>> PRINT BASE
2.0000
Printing **BASE** will return the current selected base axis.

See also **AXIS**

3.2.47 BASICERROR

Type System command

Syntax **BASICERROR**

Description The **BASICERROR** command can be used to run a routine when a run-time error occurs in a program. **BASICERROR** can only be used as part of an **ON ... GOSUB** or **ON ... GOTO** command. This command is required to be executed once in the BASIC program. If several commands are used only the one executed last is effective.

Arguments N/A

Example
```
ON BASICERROR GOTO error_routine
...
no_error = 1
STOP
error_routine:
IF no_error = 0 THEN
  PRINT "The error "; RUN_ERROR[0];
  PRINT " occurred in line "; ERROR_LINE[0]
ENDIF
STOP
```
If an error occurs in a BASIC program in this example, the error routine will be executed.
The **IF** statement is present to prevent the program going into error routine when it is stopped normally.

See also **ERROR_LINE**, **ON**, **RUN_ERROR**.

3.2.48 BATTERY_LOW

Type System parameter (read-only)

Syntax **BATTERY_LOW**

Description This parameter returns the current state of the battery condition. If **BATTERY_LOW=ON** then the battery needs to be changed. If **BATTERY_LOW=OFF** then battery condition is ok.

Arguments N/A

Example No example.

See also N/A

3.2.49 BREAK_RESET

Type System command

Syntax **BREAK_RESET "program_name"**

Description Used by Trajexia Studio to remove all break points from the specified program.

Arguments
- **program_name**
  The name of the program from which you want to remove all break points.

Example **BREAK_RESET "simpletest"**
Will remove all break points from program **simpletest**.

See also N/A

3.2.50 CAM

Type Axis command

Syntax **CAM(start_point, end_point, table_multiplier, distance)**

Description The **CAM** command is used to generate movement of an axis following a position profile which is stored in the TABLE variable array. The TABLE values are absolute positions relative to the starting point and are specified in encoder edges. The TABLE array is specified with the **TABLE** command. The movement can be defined with any number of points from 3 to the maximum table size available (500000). The TJ2-MC__ moves continuously between the values in the TABLE to allow a number of points to define a smooth profile. Two or more **CAM** commands can be executed simultaneously using the same or overlapping values in the TABLE array. The TABLE profile is traversed once.
The distance argument together with the **SPEED** and **ACCEL** parameters determine the speed moving through the TABLE array. Note that in order to follow the **CAM** profile exactly the **ACCEL** parameter of the axis must be at least 1000 times larger than the **SPEED** parameter.
CAM works on the default basis axis (set with **BASE**) unless **AXIS** is used to specify a temporary base axis.

Arguments
- **start_point**
  The address of the first element in the TABLE array to be used.
  Being able to specify the start point allows the TABLE array to hold more than one profile and/or other information.
- **end_point**
  The address of the end element in the TABLE array.
- **table_multiplier**
  The Table multiplier value used to scale the values stored in the TABLE. As the Table values are specified in encoder edges, use this argument to set the values for instance to the unit conversion factor (set by **UNITS** parameter).
- **distance**
  A factor given in user units that controls the speed of movement through the Table. The time taken to execute **CAM** depends on the current axis speed and this distance. For example, assume the system is being programmed in mm and the speed is set to 10 mm/s and the acceleration sufficiently high. If a distance of 100 mm is specified, **CAM** will take 10 seconds to execute.
  The **SPEED** parameter in the base axis allows modification of the speed of movement when using the **CAM** move.

Note: When the **CAM** command is executing, the **ENDMOVE** parameter is set to the end of the previous move.

Example Motion is required to follow the POSITION equation:
t(x) = x*25 + 10000(1-cos(x)), where x is in degrees. This example table provides a simple oscillation superimposed with a constant speed. To load the table and cycle it continuously the program would be:

```
FOR deg=0 TO 360 STEP 20 'loop to fill in the table
  rad = deg * 2 * PI/360 'convert degrees to radians
  x = deg * 25 + 10000 * (1-COS(rad))
  TABLE(deg/20,x) 'place value of x in table
NEXT deg
WHILE IN(2)=ON 'repeat cam motion while input 2 is on
  CAM(0,18,1,200)
  WAIT IDLE
WEND
```

fig. 5

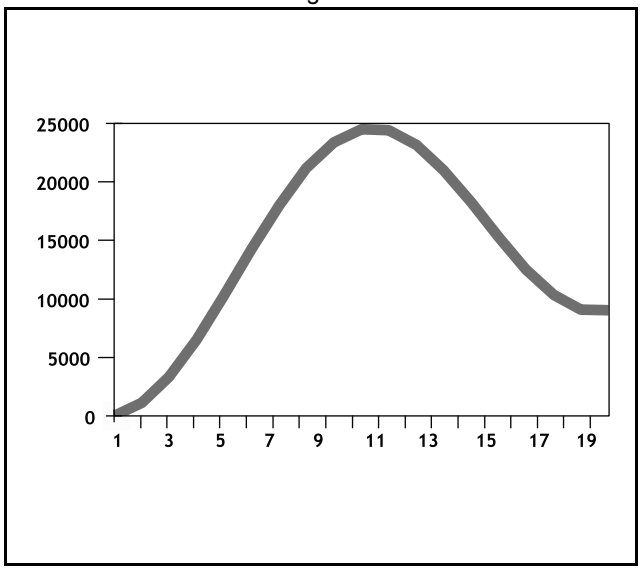

TABLE position	Degree	Value
1	0	0
2	20	1103
3	40	3340
4	60	6500
5	80	10263
6	100	14236
7	120	18000
8	140	21160
9	160	23396
10	180	24500
11	200	24396
12	220	23160
13	240	21000
14	260	18236
15	280	15263

TABLE position	Degree	Value
16	300	12500
17	320	10340
18	340	9103
19	360	9000

Example

A masked wheel is used to create a stencil for a laser to shine through for use in a printing system for the ten numerical digits. The required digits are transmitted through port 1 serial port to the controller as ASCII text.
The encoder used has 4000 edges per revolution and so must move 400 between each position. The cam table goes from 0 to 1, which means that the **CAM** multiplier needs to be a multiple of 400 to move between the positions.
The wheel is required to move to the pre-set positions every 0.25 seconds.
The speed is set to 10000 edges/second, and we want the profile to be complete in 0.25 seconds. So multiplying the axis speed by the required completion time (10000 x 0.25) gives the distance parameter equals 2500.

```
GOSUB profile_gen
WHILE IN(2)=ON
  WAIT UNTIL KEY#1 'Waits for character on port 1
  GET#1,k
  IF k>47 AND k<58 THEN 'check for valid ASCII character
    position=(k-48)*400 'convert to absolute position
    multiplier=position-offset 'calculate relative movement
    'check if it is shorter to move in reverse direction
    IF multiplier>2000 THEN
      multiplier=multiplier-4000
    ELSEIF multiplier<-2000 THEN
      multiplier=multiplier+4000
    ENDIF
    CAM(0,200,multiplier,2500) 'set the CAM movment
    WAIT IDLE
    OP(15,ON) 'trigger the laser flash
    WA(20)
    OP(15,OFF)
    offset=(k-48)*400 'calculates current absolute position
  ENDIF
WEND
profile_gen:
  num_p=201
  scale=1.0
  FOR p=0 TO num_p-1
    TABLE(p,((-SIN(PI*2*p/num_p)/(PI*2))+p/num_p)*scale)
  NEXT p
RETURN
```

fig. 6

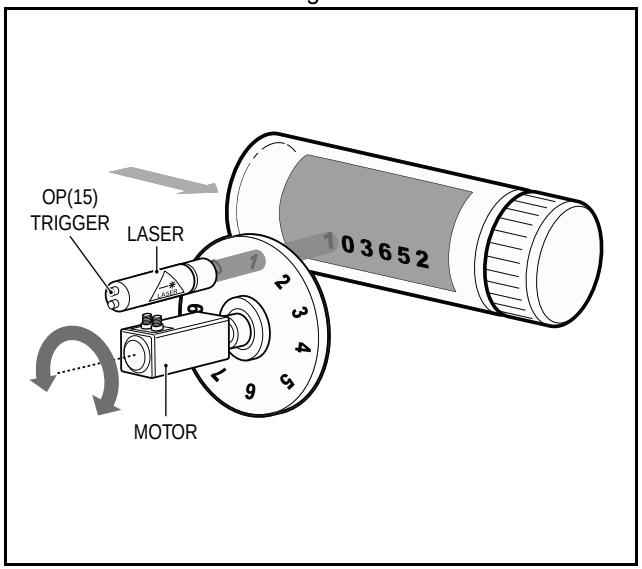

Example

A suction pick and place system must vary its speed depending on the load carried. The mechanism has a load cell which inputs to the controller on the analogue channel (**AIN**).
The move profile is fixed, but the time taken to complete this move must be varied depending on the **AIN**. The **AIN** value varies from 100 to 800, which must result in a move time of 1 to 8 seconds. If the speed is set to 10000 units per second and the required time is 1 to 8 seconds, then the distance parameter must range from 10000 to 80000. (distance = speed x time).
The return trip can be completed in 0.5 seconds and so the distance value of 5000 is fixed for the return movement. The Multiplier is set to -1 to reverse the motion.

```
GOSUB profile_gen 'loads the cam profile into the table
SPEED=10000:ACCEL=SPEED*1000:DECEL=SPEED*1000
WHILE IN(2)=ON
  OP(15,ON) 'turn on suction
  load=AIN(0) 'capture load value
  distance = 100*load 'calculate the distance parameter
  CAM(0,200,50,distance) 'move 50mm forward in time calculated
  WAIT IDLE
  OP(15,OFF) 'turn off suction
  WA(100)
  CAM(0,200,-50,5000) 'move back to pick up position
WEND

profile_gen:
  num_p=201
  scale=400 'set scale so that multiplier is in mm
  FOR p=0 TO num_p-1
    TABLE(p,((-SIN(PI*2*p/num_p)/(PI*2))+p/num_p)*scale)
  NEXT p
RETURN
```

See also

ACCEL, **AXIS**, **CAMBOX**, **SPEED**, **TABLE**.

3.2.51 CAMBOX

Type

Axis command

Syntax

CAMBOX(start_point, end_point, table_multiplier, link_distance, link_axis [, link_option [, link_position]])
CAMBOX(start_point, end_point, table_multiplier, link_distance, link_axis [, link_option [, channel]])

Description

The **CAMBOX** command is used to generate movement of an axis following a position profile in the TABLE variable array. The motion is linked to the measured motion of another axis to form a continuously variable software gearbox. The TABLE values are absolute position relative to the starting point and are specified in encoder edges.
The TABLE array is specified with the **TABLE** command. The movement can be defined with any number of points from 3 to the maximum table size available (500000). Being able to specify the start point allows the TABLE array to be used to hold more than one profile and/or other information. The TJ2-MC__ moves continuously between the values in the TABLE to allow a number of points to define a smooth profile. Two or more **CAMBOX** commands can be executed simultaneously using the same or overlapping values in the TABLE array.
Note that **CAMBOX** command allows traversing the TABLE backwards as well as forwards depending on the Master axis direction.
The **link_option** argument can be used to specify different options to start the command and to specify a continuous **CAM**. For example, if the **link_option** is set to 4 then the **CAMBOX** operates like a “physical” **CAM**.
CAMBOX works on the default basis axis (set with **BASE**) unless **AXIS** is used to specify a temporary base axis.
Note: While **CAMBOX** is being executed, the **ENDMOVE** parameter will be set to the end of the previous move. The **REMAIN** axis parameter will hold the remainder of the distance on the link axis.

Arguments

- **start_point**
  The address of the first element in the TABLE array to be used.
- **end_point**
  The address of the end element in the TABLE array.
- **table_multiplier**
  The Table multiplier value used to scale the values stored in the TABLE. As the TABLE values are specified in encoder edges, use this argument to set the values for instance to the unit conversion factor (set by UNITS parameter).
- **link_distance**
  The distance in user units the link axis must move to complete the specified output movement. The link distance must be specified as a positive distance.
- **link_axis**
  The axis to link to.
- **link_option**
  See the table below.

Link option	Description
1	Link starts when primary (**MARK**) registration event occurs on link axis.
2	Link starts at an absolute position on link axis (see **link_position**).
4	**CAMBOX** repeats automatically and bidirectionally. This option is cancelled by setting bit 1 of **REP_OPTION** parameter (that is, **REP_OPTION = REP_OPTION OR 2**).
5	Combination of starting on primary registration and options 4.
6	Combination of options 2 and 4.
256	Link starts when secondary (**MARKB**) registration event occurs on link axis.
260	Combination of starting on secondary registration and options 4.
512	Link starts when **R_MARK(channel)** registration event occurs on link axis.
516	Combination of starting on **R_MARK** and options 4.

- **link_position**
  The absolute position where **CAMBOX** will start when **link_option** is set to 2
- **channel**
  When **link_option** 512 or 516 is selected: registration input number of the TJ2-ECT__

Note: When the **CAMBOX** command is executing, the **ENDMOVE** parameter is set to the end of the previous move. The **REMAIN** axis parameter holds the remainder of the distance on the link axis.

Example

```
' Subroutine to generate a SIN shape speed profile
' Uses: p is loop counter
' num_p is number of points stored in tables pos 0..num_p
' scale is distance travelled scale factor
profile_gen:
  num_p=30
  scale=2000
  FOR p=0 TO num_p
    TABLE(p,((-SIN(PI*2*p/num_p)/(PI*2))+p/num_p)*scale)
  NEXT p
RETURN
```

This graph plots TABLE contents against table array position. This corresponds to motor POSITION against link POSITION when called using **CAMBOX**. The **SPEED** of the motor will correspond to the derivative of the position curve above.

fig. 7

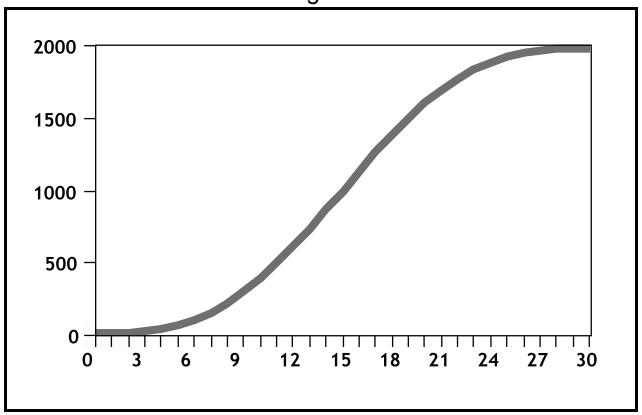

fig. 8

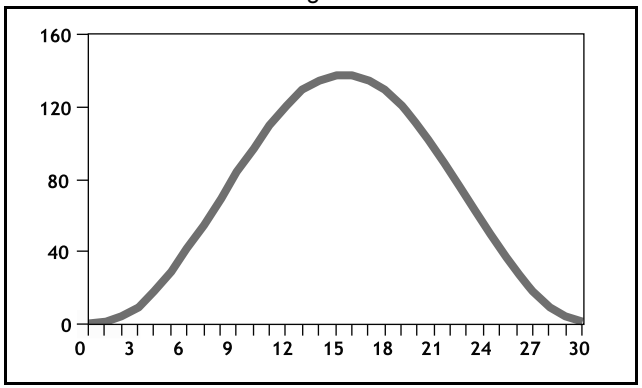

Example

A pair of rollers feeds plastic film into a machine. The feed is synchronised to a master encoder and is activated when the master reaches a position held in the variable **start**. This example uses the table points 0...30 generated in the example above:

```
start=1000
FORWARD AXIS(1)
WHILE IN(2)=OFF
  CAMBOX(0,30,800,80,15,2,start)
  WA(10)
  WAIT UNTIL MTYPE=0 OR IN(2)=ON
WEND
CANCEL
CANCEL AXIS(1)
WAIT IDLE
```

The arguments of the **CAMBOX** command are:

- 0 is the start of the profile shape in the TABLE
- 30 is the end of the profile shape in the TABLE
- 800 scales the TABLE values. Each **CAMBOX** motion therefore totals 800*2000 encoder edges steps.
- 80 is the distance on the product conveyor to link the motion to. The units for this parameter are the programmed distance units on the link axis.
- 15 specifies the axis to link to.
- 2 is the link option setting. It means: Start at absolute position on the link axis.
- The variable **start** holds a position. The motion will execute when this position is reached on axis 15.

fig. 9

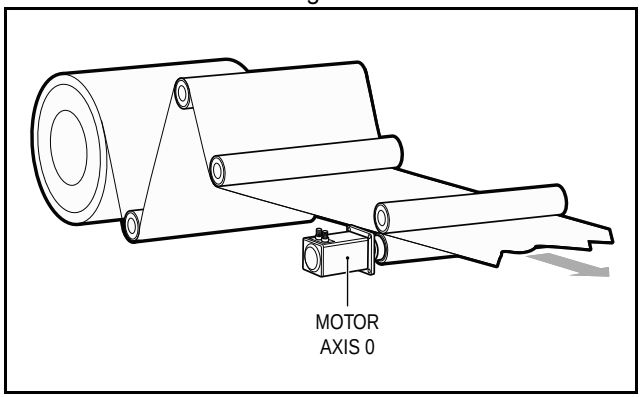

Example

A motor on Axis 0 is required to emulate a rotating mechanical CAM. The position is linked to motion on axis 3. The “shape” of the motion profile is held in TABLE values 1000..1035.
The table values represent the mechanical cam but are scaled to range from 0-4000.

```
TABLE(1000,0,0,167,500,999,1665,2664,3330,3497,3497)
TABLE(1010,3164,2914,2830,2831,2997,3164,3596,3830,3996,3996)
TABLE(1020,3830,3497,3330,3164,3164,3164,3330,3467,3467,3164)
TABLE(1030,2831,1998,1166,666,333,0)
BASE(3)
MOVEABS(130)
WAIT IDLE
'start the continuously repeating cambox
CAMBOX(1000,1035,1,360,3,4) AXIS(0)
FORWARD start camshaft axis
WAIT UNTIL IN(2)=OFF
REP_OPTION = 2 'cancel repeating mode by setting bit 1
WAIT IDLE AXIS(0) waits for cam cycle to finish
CANCEL 'stop camshaft axis
WAIT IDLE
```

Note: The system software resets bit 1 of **REP_OPTION** after the repeating mode has been cancelled.

fig. 10

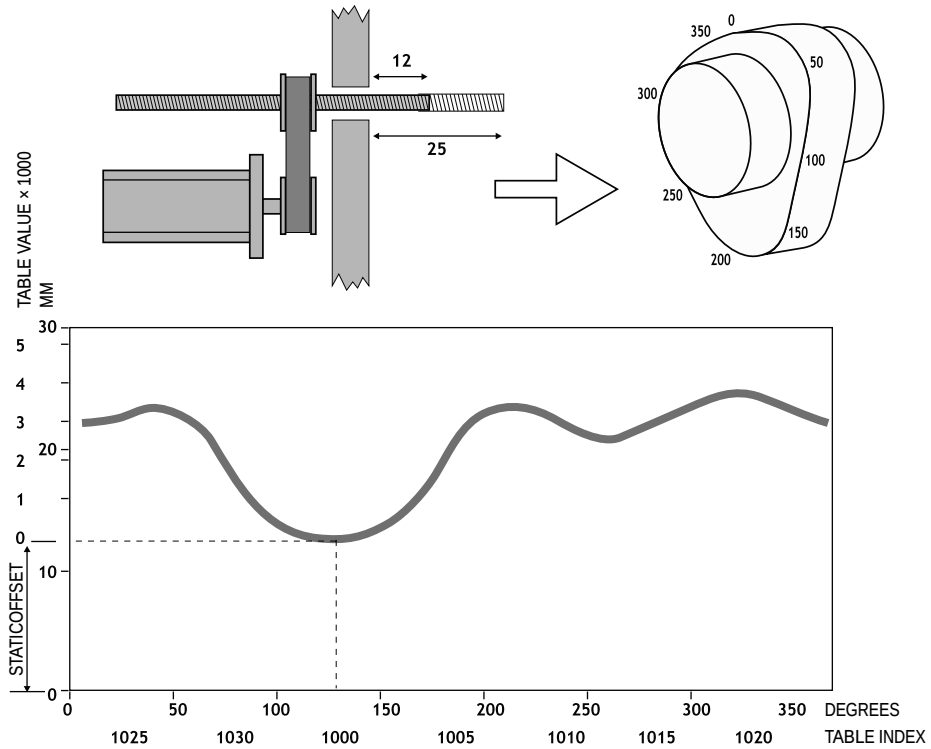

CAMBOX Pattern Mode
Setting bit 3 (value 8) of the link options parameter enables the **CAMBOX** pattern mode. This mode enables a sequence of scale values to be cycled automatically. This is normally combined with the automatic repeat mode, so the options parameter must be set to 12. The diagram shows a typical repeating pattern which can be automated with the **CAMBOX** pattern mode

The parameters for this mode are treated differently to the standard **CAMBOX** function:
CAMBOX(start, end, control_block_pointer, link_dist, link_axis, options)

The **start** and **end** parameters specify the basic shape profile ONLY. The pattern sequence is specified in a separate section of the **TABLE** memory. There is a new **TABLE** block defined: The “Control Block”. This block of seven **TABLE** values defines the pattern position, repeat controls etc. The block is fixed at 7 values long.
Therefore in this mode only there are 3 independently positioned **TABLE** blocks used to define the required motion:

- SHAPE BLOCK: This is directly pointed to by the **CAMBOX** command as in any **CAMBOX**.
- CONTROL BLOCK: This is pointed to by the third **CAMBOX** parameter in this options mode only. It is of fixed length (7 table values). It is important to note that the control block is modified during the **CAMBOX** operation. It must therefore be re-initialised prior to each use.
- PATTERN BLOCK: The start and end of this are pointed to by 2 of the CONTROL BLOCK values. The pattern sequence is a sequence of scale factors for the SHAPE.

fig. 11

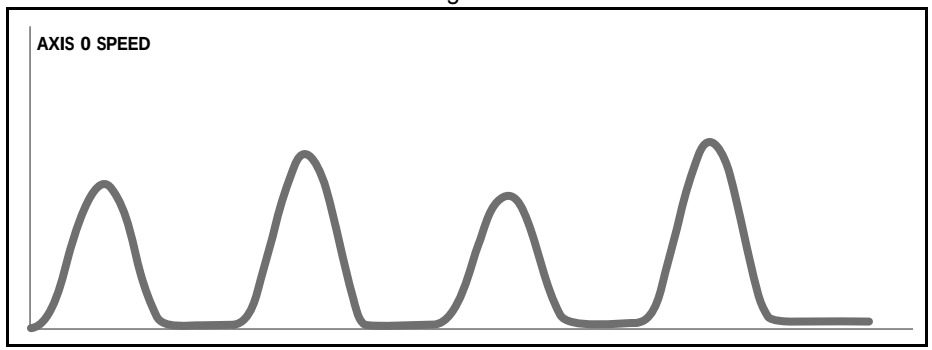

NOTE
Negative motion on link axis:
The axis the CAMBOX is linked to may be running in a positive or negative direction. In the case of a negative direction link the pattern will execute in reverse. In the case where a certain number of pattern repeats is specified with a negative direction link, the first control block will produce one repeat less than expected. This is because the CAMBOX loads a zero link position which immediately goes negative on the next servo cycle triggering a REPEAT COUNT. This effect only occurs when the CAMBOX is loaded, not on transitions from CONTROL BLOCK to CONTROL BLOCK. This effect can easily be compensated for either by increasing the required number of repeats, or setting the initial value of REPEAT POSITION to 1.

Control Block Parameters:

- **start**: The start position of the shape block in the **TABLE**
- **end**: The end position of the shape block in the **TABLE**
- **control_block_pointer**: The position in the table of the 7 point control block
- **link_dist**: The distance the link axis must move to complete **CAMBOX** profile
- **link_axis**: The axis to link to.
- **options**: As **CAMBOX**, bit 3 must be enabled

The table below gives the CONTROL BLOCK parameters
Note: R/W values can be written to by the user program during the pattern **CAMBOX** execution.

Value	Parameter	R/W	Description
0	CURRENT POSITION	R	The current position within the **TABLE** of the pattern sequence. This value should be initialised to the START PATTERN number.
1	FORCE POSITION	R/W	Normally this value is -1. If at the end of a SHAPE the user program has written a value into this TABLE position the pattern will continue at this position. The system software will then write -1 into this position. The value written must be inside the pattern such that the value: CB(2)<=CB(1)<=CB(3)
2	START PATTERN	R	The position in the **TABLE** of the first pattern value.
3	END PATTERN	R	The position in the **TABLE** of the final pattern value.
4	REPEAT POSITION	R/W	The current pattern repeat number. Initialise this number to 0. The number will increment when the pattern repeats if the link axis motion is in a positive direction. The number will decrement when the pattern repeats if the link axis motion is in a negative direction. Note that the counter runs starting at zero: 0,1,2,3...
5	REPEAT COUNT	R/W	Required number of pattern repeats. If -1 the pattern repeats endlessly. The number should be positive. When the ABSOLUTE value of CB(4) reaches CB(5) the CAMBOX finishes if CB(6)=-1. The value can be set to 0 to terminate the **CAMBOX** at the end of the current pattern. The axis the CAMBOX is linked to can run in a positive or negative direction. In the case of a negative direction link the pattern will execute in reverse. In the case where a certain number of pattern repeats is specified with a negative direction link, the first control block will produce one repeat less than expected. This is because the CAMBOX loads a zero link position which immediately goes negative on the next servo cycle triggering a REPEAT COUNT. This effect only occurs when the CAMBOX is loaded, not on transitions from CONTROL BLOCK to CONTROL BLOCK. This effect can easily be compensated for either by increasing the required number of repeats, or setting the initial value of REPEAT POSITION to 1.

Value	Parameter	R/W	Description
6	NEXT CONTROL BLOCK	R/W	If set to -1 the pattern will finish when the required number of repeats are done. Alternatively a new control block pointer can be used to point to a further control block.

Example

A quilt stitching machine runs a feed cycle that stitches a plain pattern before it starts a patterned stitch. The plain pattern must run for 1000 cycles. Then, it must runs a pattern continuously, until requested to stop at the end of the pattern. The cam profile controls the motion of the needle bar between moves. The pattern table controls the distance of the move to make the pattern.
The same shape is used for the initialisation cycles and the pattern. This shape is held in **TABLE** values 100..150.
The running pattern sequence is held in **TABLE** values 1000..4999.
The initialisation pattern is a single value held in **TABLE**(160).
The initialisation control block is held in **TABLE**(200)..**TABLE**(206).
The running control block is held in **TABLE**(300)..**TABLE**(306).

```
' Set up Initialisation control block:
TABLE(200,160,-1,160,160,0,1000,300)

' Set up running control block:
TABLE(300,1000,-1,1000,4999,0,-1,-1)

' Run whole lot with single CAMBOX:
' Third parameter is pointer to first control block

CAMBOX(100,150,200,5000,1,20)
WAIT UNTIL IN(7)=OFF

TABLE(305,0) ' Set zero repeats: This will stop at end of pattern
```

Note: The axis to which the **CAMBOX** is linked can run in a positive or negative direction. In the case of a negative direction link, the pattern executes in reverse. In the case where a certain number of pattern repeats is specified with a negative direction link, the first control block produces one repeat less than expected. This is because the **CAMBOX** loads a zero link position which immediately goes negative on the next servo cycle triggering a REPEAT COUNT. This effect only occurs when the **CAMBOX** is loaded, not on transitions from CONTROL BLOCK to CONTROL BLOCK. This effect can easily be compensated for: either increase the required number of repeats, or set the initial value of REPEAT POSITION to 1.

fig. 12

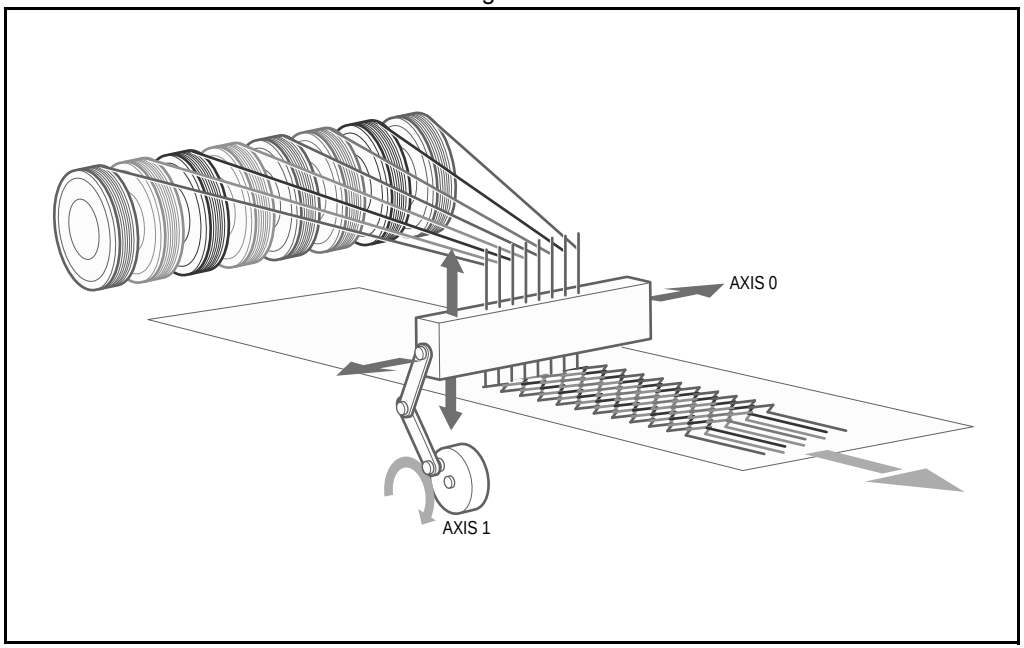

See also

AXIS, **CAM**, **REP_OPTION**, **TABLE**

3.2.52 CAN_CORT

Type System command

Syntax **CAN_CORT(unit,4,0)**
Retrieves the unit status. See the table in section 4.6.2.
CAN_CORT(unit,5,bit_rate)
Initialises the TJ1-CORT with the desired bit rate.
CAN_CORT(unit,6,node_ID,mandatory_flag)
Add a slave node to the TJ1-CORT and indicate whether it is permanently available on the network.
CAN_CORT(unit,7,PDO_number,area_type,start_address,COB_ID, obj_type, obj_type,…)
Configure an RPDO.
CAN_CORT(unit,8,PDO_number,area_type,start_address,COB_ID, inhibit_time,event_timer,obj_type, obj_type,…)
Configure a TPDO.
CAN_CORT(unit,9,node_ID,index,subindex,byte1,byte2,…)
Make the TJ1-CORT configure an object in a slave during the CANopen network initialization.
CAN_CORT(unit,10)
Start the CANopen network and map the Trajexia memory to RPDOs and TPDOs.
CAN_CORT(unit,11,mode)
Set the CANopen network to pre-operational or operational state.
CAN_CORT(unit,12,node_ID,index,subindex,VR_address)
Reads the value of a CANopen node object using an SDO (Service Data Object) command into the VR array. Each byte of the returned value occupies one VR address.
CAN_CORT(unit,13,node_ID,index,subindex,VR_address,data_len)
Write a value of a CANopen node object using an SDO command using the VR array as source. Each VR address is interpreted as one byte of the value that is written.
CAN_CORT(unit,14,node_ID,VR_address)
Reads the EMCY (emergency) message from a node into the VR array. Each byte of the eight bytes occupies one VR address.

Description The **CAN_CORT** commands where the second argument is 4 through 10 are normally used in a BASIC program that is run at startup. The sequence of the **CAN_CORT** commands that configure a CANopen network is important.

Arguments
- **unit**
  The sequence number of the unit.
- **bit_rate**
  The bit rate on the CAN bus. Valid values are 2 (500 Kbps), 3 (250 Kbps), 4 (125 Kbps), 5 (50 Kbps) and 6 (20 Kbps).
- **node_ID**
  The CANopen node on the CAN bus.
- **mandatory_flag**
  The mandatory flag of the node.
  - 0 = optional, no error occurs when the node is not in the network.
  - 1= mandatory, an error occurs when the node is not in the network.
- **PDO_number**
  Identification of an individual PDO. **PDO_number** can range from 0 to 7.
- **area_type**
  The memory area in Trajexia: 1 = VR, 2 = TABLE, 3 = Digital I/O, 4 = Analog I/O.
- **start_address**
  The array index in the **VR**, **TABLE**, **IN**, **OP**, **AIN** or **AOUT** array.
- **COB_ID**
  The COB (Controller Object Identification) ID used to identify a PDO in a CANopen network.
- **obj_type**
  The CANopen object type. Valid values are: 2 = INT8, 3 = INT16, 4 = INT32, 5 = UINT8, 6 = UINT16, 7 = UINT32.
- **inhibit_time**
  The minimum time in 0.1 ms units between two consecutive transmissions of a TPDO.
- **event_timer**
  The maximum time in ms units that is observed between two consecutive transmissions of a TPDO. If this value is 0, the time is unlimited. The TPDO is sent only when the contents changes.
- **index**
  The index of the addressed CANopen object.
- **subindex**
  The subindex within the addressed CANopen object.

- **mode**
  The CANopen network operation mode. 0 = pre-operational, 1 = operational.
- **VR_address**
  The index in the VR array.
- **data_len**
  The amount of bytes to transfer.

Example No example.

See also N/A

3.2.53 CANCEL

Type Axis command

Syntax **CANCEL[(mode)]**

Description The **CANCEL** command cancels the move on an axis or an interpolating axis group. Speed-profiled moves (**FORWARD**, **REVERSE**, **MOVE**, **MOVEABS**, **MOVECIRC**, **MHELICAL** and **MOVEMODIFY**) will be decelerated at the deceleration rate as set by the **DECEL** parameter and then stopped. Other moves will be immediately stopped.
CANCEL works on the default basis axis (set with **BASE**) unless **AXIS** is used to specify a temporary base axis.
Note:
- **CANCEL** cancels only the presently executing move. If further moves are buffered they will then be loaded.
- During the deceleration of the current move additional **CANCEL**s will be ignored.
- **CANCEL(1)** cancels only the presently buffered move. Any moves stored in the task buffers indicated by the **PMOVE** variable can be loaded into the buffer as soon as the buffered move is cancelled.

Arguments
- **mode**
  0 = Cancels axis commands from the **MTYPE** buffer. Can be used without the parameter
  1 = Cancels all buffered axis commands.
  2 = Cancels all current and buffered axis commands.

Example
```
FORWARD
WA(10000)
CANCEL  ' Stop movement after 10 seconds
```

Example
```
MOVE(1000)
MOVEABS(3000)
CANCEL ' Cancel the move to 3000 and move to 4000 instead.
MOVEABS(4000)
```
Note that the command **MOVEMODIFY** is a better solution for modifying end points of moves in this case.

fig. 13

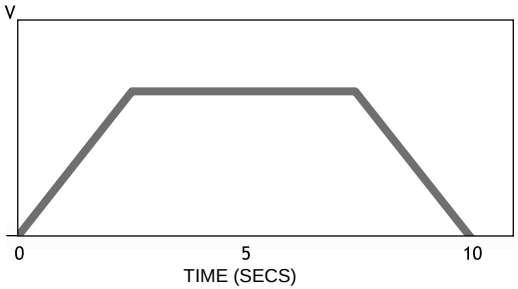

fig. 14

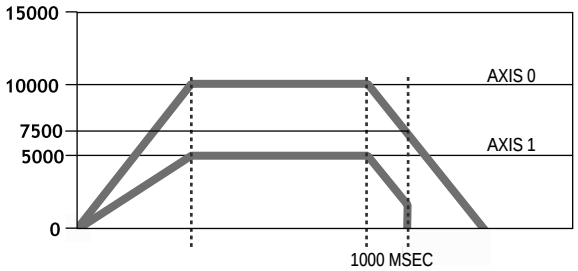

Example Two axes are connected with a ratio of 1:2. Axis 0 is cancelled after 1 second, then axis 1 is cancelled when the speed drops to a specified level. After the first cancel axis 1 decelerates at the **DECEL** rate. When the **CONNECT** of axis 1 is cancelled, axis 1 stops instantly.
```
BASE(0)
SPEED=10000
FORWARD
CONNECT(0.5,0) AXIS(1)
WA(1000)
CANCEL
WAIT UNTIL VP_SPEED<=7500
CANCEL AXIS(1)
```

See also **AXIS**, **MTYPE**, **NTYPE**, **PMOVE**, **RAPIDSTOP**

3.2.54 CHANGE_DIR_LAST

Type	Axis parameter
Syntax	**CHANGE_DIR_LAST**
Description	Allows the program to examine the change in direction in radians of the last programmed **MOVESP**/**MOVEABSSP**/**MOVECIRCSP** move of 2 or more axes. **CHANGE_DIR_LAST** is always positive.
Arguments	N/A

Example

```
MOVESP(100,100)
PRINT "START_DIR_LAST:  ";START_DIR_LAST/(2*PI)*360[0];" Deg"
PRINT "CHANGE_DIR_LAST: ";CHANGE_DIR_LAST/(2*PI)*360[0];" Deg"
PRINT "END_DIR_LAST:    ";END_DIR_LAST/(2*PI)*360[0];" Deg"
PRINT
MOVESP(-100,100)
PRINT "START_DIR_LAST:  ";START_DIR_LAST/(2*PI)*360[0];" Deg"
PRINT "CHANGE_DIR_LAST: ";CHANGE_DIR_LAST/(2*PI)*360[0];" Deg"
PRINT "END_DIR_LAST:    ";END_DIR_LAST/(2*PI)*360[0];" Deg"
```

Results in:

```
START_DIR_LAST:  45 Deg
CHANGE_DIR_LAST: 45 Deg
END_DIR_LAST:    45 Deg

START_DIR_LAST:  -45 Deg
CHANGE_DIR_LAST: 90 Deg
END_DIR_LAST:    -45 Deg
```

See also **MOVESP**, **START_DIR_LAST**, **END_DIR_LAST**

fig. 15

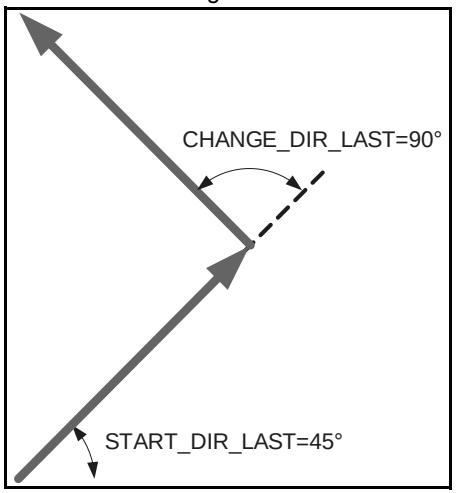

3.2.55 CHECKSUM

Type	System parameter (read-only)
Syntax	**CHECKSUM**
Description	The **CHECKSUM** parameter contains the checksum for the programs in RAM. At start-up, the checksum is recalculated and compared with the previously held value. If the checksum is incorrect the program will not run.
Arguments	N/A
Example	No example.
See also	N/A

3.2.56 CHR

Type	I/O command
Syntax	**CHR(x)**
Description	The **CHR** command is used to send individual ASCII characters which are referred to by number. **PRINT CHR(x)**; is equivalent to **PUT(x)** in some other versions of BASIC.
Arguments	• **x** A BASIC expression.
Example	**>>PRINT CHR(65);** **A**
See also	N/A

3.2.57 CLEAR

Type	System command
Syntax	**CLEAR**
Description	The **CLEAR** command resets all global VR variables to 0 and sets local variables on the process on which the command is run to 0. When you use it in a program it resets all local variables defined to 0.
Arguments	N/A
Example	**>>VR(0)=22: VR(20)=44.3158: VR(300)=-12** **>>PRINT VR(0), VR(20), VR(300)** **22.0000 44.3158 -12.0000** **>>CLEAR** **>>PRINT VR(0), VR(20), VR(300)** **0.0000 0.0000 0.0000**
See also	**RESET**, **VR**

3.2.58 CLEAR_BIT

Type	System command
Syntax	**CLEAR_BIT(bit_number, vr_number)**
Description	The **CLEAR_BIT** command resets the specified bit in the specified VR variable. Other bits in the variable keep their values.
Arguments	• **bit_number** The number of the bit to be reset. Range: 0 - 52. • **vr_number** The number of the VR variable for which the bit will be reset. Range: 0 - 63999.
Example	**>>PRINT VR(17)** **112.0000** **>>CLEAR_BIT(5, 17)** **>>PRINT VR(17)** **80.0000**
See also	**READ_BIT**, **SET_BIT**, **VR**.

3.2.59 CLEAR_PARAMS

Type	System command
Syntax	**CLEAR_PARAMS**
Description	Clears all variables and parameters stored in Flash-ROM to their default values. The **CLEAR_PARAMS** command will erase (set to 0) all the VR's stored using **FLASHVR** command. This command cannot be performed if the controller is locked.
Arguments	N/A
Example	No example.
See also	**FLASHVR**

3.2.60 CLOSE_WIN

Type	Axis parameter
Syntax	**CLOSE_WIN** **CW**
Description	The **CLOSE_WIN** axis parameter defines the end of the window inside or outside which a registration mark is expected. The value is in user units. Note: **OPEN_WIN** must be the numerically smaller than **CLOSE_WIN**
Arguments	N/A
Example	**OPEN_WIN=1000** **CLOSE_WIN=2000**
See also	**AXIS**, **OPEN_WIN**, **REGIST**, **UNIT_INIT**.

3.2.61 CLUTCH_RATE

Type	Axis parameter
Syntax	**CLUTCH_RATE**
Description	The **CLUTCH_RATE** axis parameter defines the change in connection ratio when using the **CONNECT** command. The rate is defined as amount of ratio per second. Note: The operation using **CLUTCH_RATE** is not deterministic in position. If required, use the **MOVELINK** command instead to avoid unnecessary phase difference between base axis and linked axis.
Arguments	N/A
Example	**CLUTCH_RATE = 4** This setting will imply that when giving **CONNECT(4,1)**, it will take one second to reach the full connection.
See also	**AXIS**, **CONNECT**, **MOVELINK**.

3.2.62 CO_READ

Type	System command
Syntax	**CO_READ(unit_number, address, index, subindex ,type [,output])**
Description	Command to read a CANopen object from an EtherCAT device. Upon successful execution, this command returns -1 and puts the read value in the VR memory location specified or prints it to the current output device. If the command cannot be executed, the value 0 is returned. Notes: • This command waits for the response of the device so, its execution is slow and the time variable. Do not use this command together with other commands that require quick execution. • It is advised to only perform **CO_READ(_AXIS)** and **CO_WRITE(_AXIS)** from one process to prevent interference during execution.

Arguments
- **unit_number**
  Unit number of the EtherCAT master to which the slave is attached.
- **address**
  Configured address of the EtherCAT slave
- **index**
  Index number of the CANopen object
- **subindex**
  Sub-index number of the CANopen object
- **type**
  Data-type of the CANopen object
  1 Boolean (BOOL)
  2 Integer8 (INT8)
  3 Integer16 (INT16)
  4 Integer32 (INT32)
  5 Unsigned8 (U8)
  6 Unsigned16 (U16)
  7 Unsigned32 (U32)
  9 Visible string (VS)
- **output**
  Pointer to VR array to read data into or -1 if data to be returned to the current output device. Default -1.

In case of reading a Visible String (**type** = 9), an additional (**length**) parameter is required:
CO_READ(unit_number, address, index, subindex ,type, length [,output])

- **length**
  Number of characters to read from the CANopen object

Example Read StatusWord (object 6040h) of a G5-ECT drive at address 2 and put the result in VR(100):
CO_READ(0,2,$6040,0,6,100)

See also **CO_READ_AXIS**, **CO_WRITE**

3.2.63 CO_READ_AXIS

Type System command

Syntax **CO_READ_AXIS(axis, index, subindex ,type [,output])**

Description Command to read a CANopen object from an EtherCAT axis. Upon successful execution, this command returns -1 and puts the read value in the VR memory location specified or prints it to the current output device. If the command cannot be executed, the value 0 is returned.
Notes:
- This command waits for the response of the device so, its execution is slow and the time variable. Do not use this command together with other commands that require quick execution.
- It is advised to only perform **CO_READ(_AXIS)** and **CO_WRITE(_AXIS)** from one process to prevent interference during execution.

Arguments
- **axis**
  Axis number of the EtherCAT drive.
- **index**
  Index number of the CANopen object
- **subindex**
  Sub-index number of the CANopen object
- **type**
  Data-type of the CANopen object
  1 Boolean (BOOL)
  2 Integer8 (INT8)
  3 Integer16 (INT16)
  4 Integer32 (INT32)
  5 Unsigned8 (U8)
  6 Unsigned16 (U16)
  7 Unsigned32 (U32)
  9 Visible string (VS)
- **output**
  Pointer to VR array to read data into or -1 if data to be returned to the current output device. Default -1.

In case of reading a Visible String (**type** = 9), an additional (**length**) parameter is required:
CO_READ_AXIS(axis, index, subindex ,type, length [,output])

- **length**
  Number of characters to read from the CANopen object

Example Read StatusWord (object 6040h) of a G5-ECT drive at axis 2 and put the result in VR(100):
CO_READ(2,$6040,0,6,100)

See also **CO_READ**, **CO_WRITE_AXIS**

3.2.64 CO_WRITE

Type System command

Syntax **CO_WRITE(unit_number, address, index, subindex ,type, data [,value])**

Description Command to write a CANopen object of an EtherCAT device. Upon successful execution, this command returns -1. If the command cannot be executed, the value 0 is returned.
Notes:
- This command waits for the response of the device so, its execution is slow and the time variable. Do not use this command together with other commands that require quick execution.
- It is advised to only perform **CO_READ(_AXIS)** and **CO_WRITE(_AXIS)** from one process to prevent interference during execution.

Arguments
- **unit_number**
  Unit number of the EtherCAT master to which the slave is attached.
- **address**
  Configured address of the EtherCAT slave
- **index**
  Index number of the CANopen object
- **subindex**
  Sub-index number of the CANopen object
- **type**
  Data-type of the CANopen object
  1 Boolean (BOOL)
  2 Integer8 (INT8)
  3 Integer16 (INT16)
  4 Integer32 (INT32)
  5 Unsigned8 (U8)
  6 Unsigned16 (U16)
  7 Unsigned32 (U32)
- **data**
  0 to n specifies the start of the VR block where the data will be fetched from
  Data: -1 specifies that the value is in the next parameter [Value]
- **value**
  The value to be written to the CANopen object.

Example N/A

See also **CO_READ**, **CO_WRITE_AXIS**

3.2.65 CO_WRITE_AXIS

Type: System command

Syntax: **CO_WRITE_AXIS(axis, index, subindex ,type, data [,value])**

Description: Command to write a CANopen object of an EtherCAT axis. Upon successful execution, this command returns -1. If the command cannot be executed, the value 0 is returned.
Notes:
- This command waits for the response of the device so, its execution is slow and the time variable. Do not use this command together with other commands that require quick execution.
- It is advised to only perform **CO_READ(_AXIS)** and **CO_WRITE(_AXIS)** from one process to prevent interference during execution.

Arguments:
- **axis**
  Axis number of the EtherCAT drive.
- **index**
  Index number of the CANopen object
- **subindex**
  Sub-index number of the CANopen object
- **type**
  Data-type of the CANopen object
  1 Boolean (BOOL)
  2 Integer8 (INT8)
  3 Integer16 (INT16)
  4 Integer32 (INT32)
  5 Unsigned8 (U8)
  6 Unsigned16 (U16)
  7 Unsigned32 (U32)
- **data**
  0 to n specifies the start of the VR block where the data will be fetched from
  Data: -1 specifies that the value is in the next parameter [Value]
- **value**
  The value to be written to the CANopen object.

Example: N/A

See also: **CO_READ_AXIS**, **CO_WRITE**

3.2.66 COMMSERROR

Type: System parameter (read-only)

Syntax: **COMMSERROR**

Description: The **COMMSERROR** parameter contains the communication errors that have occurred since the last time that it was initialized.
The bits in **COMMSERROR** are given in the table below.

Bit	Description	Error location
8	Port 1 Rx data ready	Serial port 1
9	Port 1 Rx Overrun	Serial port 1
10	Port 1 Parity Error	Serial port 1
11	Port 1 Rx Frame Error	Serial port 1
12	Port 2 Rx data ready	Serial port 2
13	Port 2 Rx Overrun	Serial port 2
14	Port 2 Parity Error	Serial port 2
15	Port 2 Rx Frame Error	Serial port 2

Arguments: N/A

Example: No example.

See also: N/A

3.2.67 COMMSTYPE

Type: Slot parameter

Syntax: **COMMSTYPE SLOT(unit_number)**

Description: This parameter returns the type of unit in a controller unit. The table below lists the return values.

Return value	Description
0	Unused unit
31	TJ1-ML16
33	TJ1-FL02
34	TJ1-PRT
35	TJ1-DRT
36	TJ1-ML04
38	TJ1-CORT
42	TJ2-ECT64
46	TJ2-ECT04
47	TJ2-ECT16
48	TJ2-KS02

Arguments:
- **unit_number**
  Unit numbers are 0 to 6, with 0 being the unit immediately to the right of the TJ2-MC__.

Example: No example.

See also: N/A

3.2.68 COMPILE

Type: Program command

Syntax: **COMPILE**

Description: The **COMPILE** command forces the compilation of the currently selected program to intermediate code. Program are compiled automatically by the system software prior to program execution or when another program is selected. This command is therefore not normally required.

Arguments: N/A

Example: No example.

See also: N/A

3.2.69 CONNECT

Type: Axis command

Syntax: **CONNECT(ratio, driving_axis)**
CO(ratio, driving_axis)

Description: The **CONNECT** command connects the demand position of the base axis to the measured movements of the axis specified by **driving_axis** to achieve an electronic gearbox.
The ratio can be changed at any time by executing another **CONNECT** command on the same axis. To change the driving axis the **CONNECT** command needs to be cancelled first. **CONNECT** with different driving axis will be ignored. The **CONNECT** command can be cancelled with a **CANCEL** or **RAPIDSTOP** command. The **CLUTCH_RATE** axis parameter can be used to set a specified connection change rate.
CONNECT works on the default basis axis (set with **BASE**) unless **AXIS** is used to specify a temporary base axis.

fig. 16

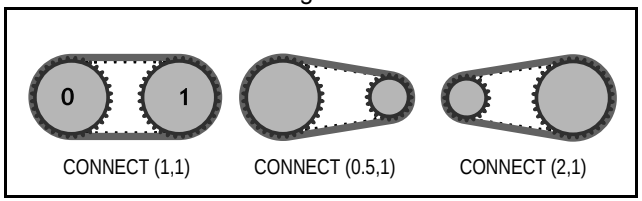

Arguments:
- **ratio**
  The connection ratio of the gearbox. The ratio is specified as the encoder edge ratio (not units). It holds the number of edges the base axis is required to move per edge increment of the driving axis. The ratio value can be either positive or negative and has sixteen bit fractional resolution.
- **driving_axis**
  The Master axis which will drive the base axis.
  Note: To achieve an exact connection of fractional ratio's of values such as 1024/3072 the **MOVELINK** command can be used with the continuous repeat link option set to ON.

Example: In a press feed, a roller is required to rotate at a speed that is equal to one quarter of the measured rate from an encoder installed on the incoming conveyor. The roller is wired to the master axis 0. The reference encoder is connected to axis 1.

```
BASE(0)
SERVO=ON
CONNECT(0.25,1)
```

Example A machine has an automatic feed on axis 1 that must move at a set ratio to axis 0. This ratio is selected using inputs 0-2 to select a particular “gear”. This ratio can be updated every 100 ms. Combinations of inputs select the intermediate gear ratios. For example, 1 ON and 2 ON gives a ratio of 6:1.

```
BASE(1)
FORWARD AXIS(0)
WHILE IN(3)=ON
  WA(100)
  gear = IN(0,2)
  CONNECT(gear,0)
WEND
RAPIDSTOP ‘ cancel the FORWARD and the CONNECT
```

fig. 17

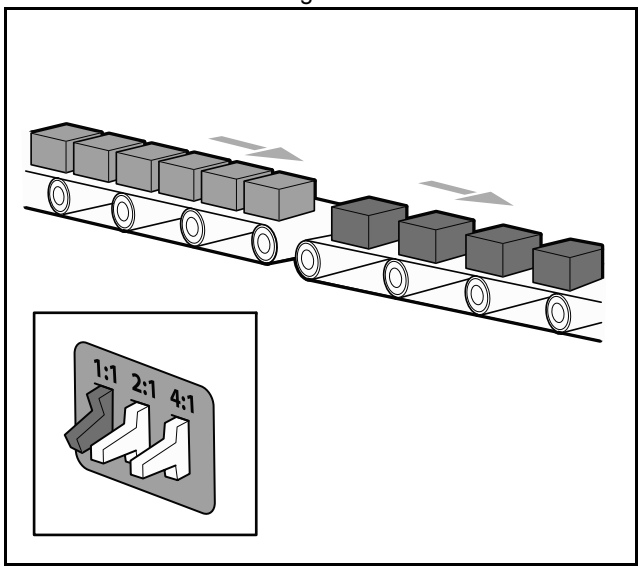

Example Axis 0 is required to run a continuous forward. Axis 1 must connect to axis 0. If **CONNECT** is called, it results in a step change. Therefore, **CLUTCH_RATE** is used, together with an initial and final connect ratio of zero, to get the required motion.

```
FORWARD AXIS(0)
BASE(1)
CONNECT(0,0) 'set intitial ratio to zero
CLUTCH_RATE=0.5 'set clutch rate
CONNECT(2,0) 'apply the required connect ratio
WA(8000)
CONNECT(0,0) 'apply zero ratio to disconnect
WA(4000) 'wait for deceleration to complete
CANCEL 'cancel connect
```

See also **AXIS**, **CANCEL**, **CLUTCH_RATE**, **CONNECT**, **RAPIDSTOP**.

fig. 18

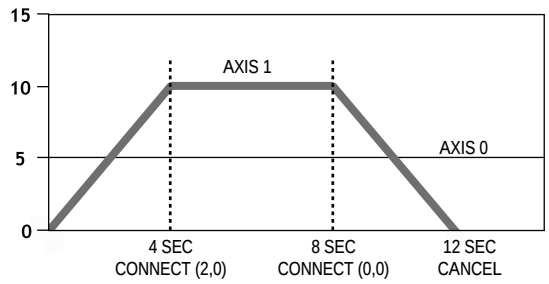

3.2.70 CONSTANT

Type	System command
Syntax	**CONSTANT ["name"[, value]]**
Description	Declares the name as a constant for use both within the program containing the **CONSTANT** definition and all other programs in the Trajexia Studio project. Note: The program containing the **CONSTANT** definition must be run before the name is used in other programs. In addition, only that program should be running at the time the **CONSTANT** is executed, otherwise the program error will appear and the program will stop when trying to execute this command. For fast startup the program should also be the only process running at power-up. Using **CONSTANT** with only the name will erase the specified constant. Using **CONSTANT** with no parameters will erase all **CONSTANT** declarations. This also happens when the TJ2-MC__ is reset by switching the power off and back on, or by executing the EX command. A maximum of 1024 **CONSTANT**s can be declared. The maximum length of the name of the **GLOBAL** is 32 characters.
Arguments	• **name** Any user-defined name containing lower case alpha, numerical or underscore characters. • **value** The value assigned to **name**.
Example	**CONSTANT "nak", $15** **CONSTANT "start_button", 5** **IF IN(start_button)=ON THEN OP(led1, ON)** **IF key_char=nak THEN GOSUB no_ack_received**
See also	**LIST_GLOBAL**

3.2.71 CONTROL

Type	System parameter (read-only)
Syntax	**CONTROL**
Description	The **CONTROL** parameter returns the type of TJ2-MC__ in the system. • 266 = TJ2-MC64 • 267 = TJ2-MC04 • 268 = TJ2-MC16 • 269 = TJ2-MC02 Note: When the Machine Controller is locked, 1000 is added to above values, so e.g. a locked TJ2-MC64 will return 1266.
Arguments	N/A
Example	No example.
See also	N/A

3.2.72 COPY

Type	Program command
Syntax	**COPY program_name new_program_name**
Description	The **COPY** command copies an existing program in the controller to a new program with the specified name. The program name can be specified without quotes. Note: This command is implemented for the Command Line Terminal.
Arguments	• **program_name** Name of the program to be copied. • **new_program_name** Name to use for the new program.
Example	**>> COPY "prog" "newprog"**
See also	**DEL**, **NEW**, **RENAME**.

3.2.73 CORNER_MODE

Type	System parameter
Syntax	**CORNER_MODE**
Description	Allows the program to control the cornering action: Bit 0 - reserved for future use Bit 1 - Enable use of **DECEL_ANGLE** and **STOP_ANGLE** When enabling this function, the system will proportionally reduce the speed when a change in angle of two consecutive moves is between the angles defined by **DECEL_ANGLE** and **STOP_ANGLE**. Bit 2 - allows **RAISE_ANGLE** and **CORNER_STATE** interaction Bit 3 - allows **FULL_SP_RADIUS** It is possible to use combinations of these.
Arguments	N/A
Example	CORNER_MODE=2 In the following example the system will reduce the speed to 27.5% during an change in angle of PI/4.
Example	Bit 2 - allows **RAISE_ANGLE** and **CORNER_STATE** interaction See **CORNER_STATE**

fig. 19

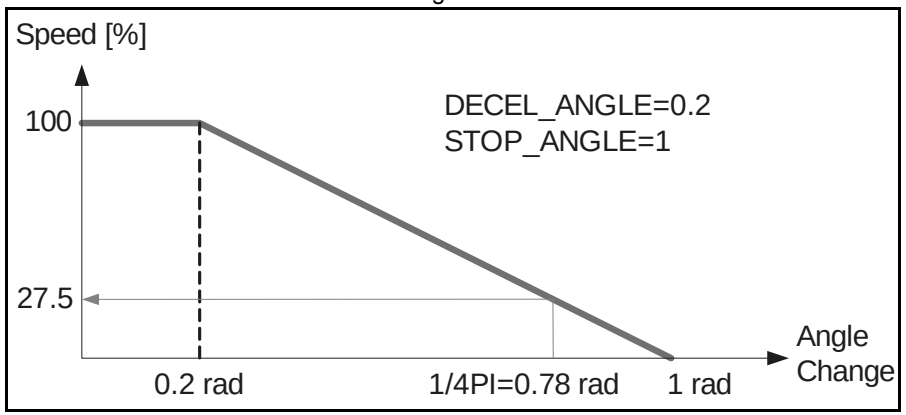

Example

Bit 3 - allows **FULL_SP_RADIUS**
In the following program, when the first two **MOVECIRCSP** is reached the speed remains at 1000 because the radius (60) is greater than that set in **FULL_SP_RADIUS**. The speeds of the following circular moves are reduced to 60% (40/60), 30% (20/60) and 15% (20/60) because the radius is proportionally lower than that stored in **FULL_SP_RADIUS**.

```
BASE(0)
CORNER_MODE=8 'Enable use of FULL_SP_RADIUS (bit 3 ON)
FULL_SP_RADIUS=60
MERGE=ON
FORCE_SPEED=1000
ENDMOVE_SPEED=1000
MOVECIRCSP(150,0,75,0,1)
MOVECIRCSP(120,0,60,0,0)
MOVECIRCSP(80,0,40,0,1)
MOVECIRCSP(40,0,20,0,0)
MOVECIRCSP(20,0,10,0,1)
```

fig. 20

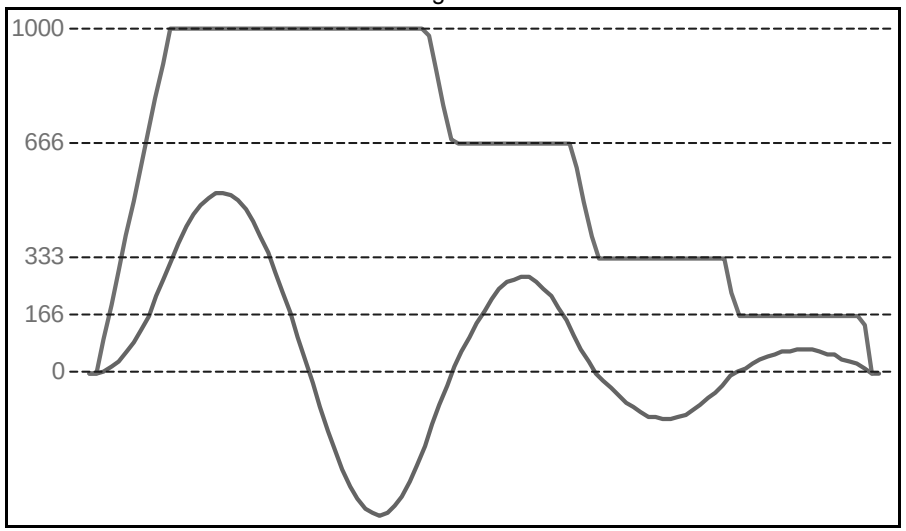

See also

CORNER_STATE, **DECEL_ANGLE**, **R_MARK**, **STOP_ANGLE**, **FULL_SP_RADIUS**

3.2.74 CORNER_STATE

Type

Axis parameter

Syntax

CORNER_STATE

Description

Allows a BASIC program to interact with the move loading process to facilitate knife rotation at sharp corners. Bit 2 of **CORNER_MODE** must be set for this functionality.
Description of the bits in **CORNER_STATE**:
Bit 1 - This bit is set when the change in direction is above **RAISE_ANGLE**
Bit 2 - Set this bit to continue at **FHSPEED**
Bit 3 - This bit is set when the axis is continuing at **FHSPEED**
Clear all bits to continue normal operation.

Arguments

N/A

Example
```
MOVEABSSP(x,y)
IF CHANGE_DIR_LAST>RAISE_ANGLE THEN
   WAIT UNTIL CORNER_STATE>0
   GOSUB raise
   CORNER_STATE=3
   WA(10)
   WAIT UNTIL VP_SPEED AXIS(2)=0
   GOSUB lower
   CORNER_STATE=0
ENDIF
```

See also **CORNER_MODE**, **R_MARK**, **FHSPEED**

3.2.75 COS

Type Mathematical function

Syntax **COS(expression)**

Description The **COS** function returns the cosine of the expression. Input values are in radians and may have any value. The result value will be in the range from -1 to 1.

Arguments
- **expression**
  Any valid BASIC expression.

Example
```
>> PRINT COS(0)
1.0000
```

See also N/A

3.2.76 CRC16

Type System command

Syntax mode=0: **CRC16(mode, poly)**
mode=1: **CRC16(mode, data_source, start, end, reg)**

Description Calculates the 16 bit CRC of data stored in contiguous Table Memory or VR Memory locations.

Arguments
- **mode**
  Specifies the mode of the command.
  0 = Initialises the command with the Polynomial
  1 = Returns the CRC. Will return 0 if Initialise has not been run
- **poly**
  Polynomial used as seed for CRC check range 0-65535 (or 0-$FFFF)
- **data_source**
  Defines where the data is loaded
  0 = **TABLE** memory
  1 = **VR** memory
- **start**
  Start location of first byte
- **end**
  End location of last byte
- **reg**
  Initial CRC value. Normally $0 - $FFFF

Example Using **TABLE** memory:
```
poly = $90d9
reginit = $ffff
CRC16(0, poly) 'Initialise internal CRC table memory
TABLE(0,1,2,3,4,5,6,7,8) ‘Load data into table memory location 0-7
calc_crc = CRC16(1,0,0,7,reginit) 'Source Data=TABLE(0..7)
```

Example Using **VR** memory:
```
poly = $90d9
reginit = $ffff
CRC16(0, poly) 'Initialise internal CRC table memory
‘Load 6 bytes into VR memory location 0-5
FOR i=0 TO 5
   VR(i)=i+1
NEXT i
calc_crc = CRC16(1,1,0,5,reginit) 'Source Data=VR(0)..VR(5)
```

See also N/A

3.2.77 CREEP

Type: Axis parameter

Syntax: **CREEP**

Description: The **CREEP** axis parameter contains the creep speed for the axis. The creep speed is used for the slow part of an origin search sequence. **CREEP** can have any positive value, including 0.
The creep speed is entered in units/sec with the unit conversion factor **UNITS**. For example, if the unit conversion factor is set to the number of encoder edges/inch, the speed is set in inches/sec.

Arguments: N/A

Example:
```
BASE(2)
CREEP=10
SPEED=500
DATUM(4)
CREEP AXIS(1)=10
SPEED AXIS(1)=500
DATUM(4) AXIS(1)
```

See also: **AXIS**, **DATUM**, **UNIT_INIT**.

3.2.78 D_GAIN

Type: Axis parameter

Syntax: **D_GAIN**

Description: The **D_GAIN** axis parameter contains the derivative gain for the axis. The derivative output contribution is calculated by multiplying the change in Following Error with **D_GAIN**. The default value is 0.
Add the derivative gain to a system to produce a smoother response and to allow the use of a higher proportional gain that could not be used otherwise. High values can cause oscillation.
Note: The servo gain must only be changed when the **SERVO** is off.
Note: Servo gains have no affect on stepper output axis, **ATYPE**=46.

Arguments: N/A

Example: **D_GAIN=0.25**

See also: **AXIS**, **I_GAIN**, **OV_GAIN**, **P_GAIN**, **VFF_GAIN**.

3.2.79 D_ZONE_MAX

Type: System parameter

Syntax: **D_ZONE_MAX=value**

Description: This parameter works in conjunction with **D_ZONE_MIN** to clamp the DAC output to zero when the demand movement is complete and the magnitude of the Following Error is less than the **D_ZONE_MIN** value. The servo loop will be reactivated when either the Following Error rises above the **D_ZONE_MAX** value, or a fresh movement is started.

Arguments: N/A

Example:
```
D_ZONE_MIN=3
D_ZONE_MAX=10
```
With these 2 parameters set as above, the DAC output will be clamped at zero when the movement is complete and the Following Error falls below 3. When a movement is restarted or if the Following Error rises above a value of 10, the servo loop will be reactivated.

See also: **D_ZONE_MIN**.

3.2.80 D_ZONE_MIN

Type: System parameter

Syntax: **D_ZONE_MIN=value**

Description: This parameter works in conjunction with **D_ZONE_MAX** to clamp the DAC output to zero when the demand movement is complete and the magnitude of the Following Error is less than the **D_ZONE_MIN** value. The servo loop will be reactivated when either the Following Error rises above the **D_ZONE_MAX** value, or a fresh movement is started.

Arguments: N/A

Example **D_ZONE_MIN=3**
D_ZONE_MAX=10
With these 2 parameters set as above, the DAC output will be clamped at zero when the movement is complete and the Following Error falls below 3. When a movement is restarted or if the Following Error rises above a value of 10, the servo loop will be reactivated.

See also **D_ZONE_MAX**.

3.2.81 DAC

See **S_REF**.

3.2.82 DAC_OUT

See **S_REF_OUT**.

3.2.83 DAC_SCALE

Type Axis parameter

Syntax **DAC_SCALE**

Description The **DAC_SCALE** axis parameter is an integer multiplier which is applied between the servo control loop output and the Digital to Analog Converter which output is supplied to the Servo Drive. Its value is set to 16 on axes with a 16 bit Digital to Analog Converter, which are Flex axis types. This scales the values applied to the higher resolution **DAC** so that the gains required on the axis are similar to those required on the other controllers.
DAC_SCALE may be set negative (-16) to reverse the polarity of the DAC output signal. This is useful in case if e.g. absolute SSI encoder used has no capability of changing default CW/CCW rotation direction and the default direction is opposite to the one of the Servo Drive used.
Notes:

- When the **SERVO** is **OFF** for a given axis, the magnitude of **DAC_SCALE** is not important as the voltage applied is controlled by the **DAC** parameter. The polarity is still reversed however by **DAC_SCALE**.
- The default **DAC_SCALE** value for MECHATROLINK-II or EtherCAT axis types is 1.

Arguments N/A

Example **DAC_SCALE AXIS(3)=-16**

See also **DAC**, **S_REF**.

3.2.84 DATE

Type System parameter

Syntax **DATE**

Description Returns or sets the current date held by the Trajexia' s real time clock. The number may be entered in DD:MM:YY or DD:MM:YYYY format.

Arguments N/A

Example **DATE=25:09:09**
or
DATE=25:09:2009

Example **>>PRINT DATE**
3555
This prints the number representing the current day. This number is the number of days since 1st January 2000, with 1 Jan. 1900 represented as 1.

See also N/A

3.2.85 DATE$

Type System command

Syntax **DATE$**

Description Prints the current date DD/MMM/YYYY as a string to the communication port. A 4-digit year description is given.

Arguments N/A

Example **PRINT #1, DATE$**
This will print the date in format for example: 20/Oct/2005

See also N/A

3.2.86 DATUM

Type: Axis command

Syntax: **DATUM(sequence)**

Description: The **DATUM** command performs one of 6 origin search sequences to position an axis to an absolute position and also reset the error bits in **AXIS_FS_LIMIT** axis parameter.
DATUM uses both the creep and demand speed for the origin search. The creep speed in the sequences is set with the **CREEP** axis parameter and the demand speed is set with the **SPEED** axis parameter. The datum switch input number, used for sequences 3 to 6, is set by the **DATUM_IN** parameter.
DATUM works on the default basis axis (set with **BASE**) unless **AXIS** is used to specify a temporary base axis.
Note: The origin input set with the **DATUM_IN** parameter is active low, i.e., the origin switch is set when the input is OFF. The feedhold, reverse jog, forward jog, forward and reverse limit inputs are also active low. Active low inputs are used to enable fail-safe wiring.

Arguments:
- **sequence**
  See the table below.

sequence value	Description
0	The **DATUM(0)** command will clear the motion error. The currently measured position is set as the demand position (this is especially useful on stepper axes with position verification). **DATUM(0)** also clears the Following Error that exceeded the **FE_LIMIT** condition in the **AXISSTATUS** register for ALL axes. It sets these bits in **AXISSTATUS** to zero: Bit 1 : Following Error Warning. Bit 2 : Remote Drive Comms Error. Bit 3 : Remote Drive Error. Bit 8 : Following Error Limit Exceeded. Bit 11 : Cancelling Move. Note that the status can not be cleared if the cause of the problem is still present. **DATUM(0)** must only be used after the **WDOG** is set to **OFF**, otherwise there will be unpredictable errors on the motion.
1	The axis moves at creep speed forward until the Z marker is encountered. The demand position is then reset to 0 and the measured position corrected so as to maintain the Following Error.
2	The axis moves at creep speed in reverse until the Z marker is encountered. The demand position is then reset to 0 and the measured position corrected so as to maintain the Following Error.
3	The axis moves at the demand speed forward until the datum switch is reached. The axis then moves reverse at creep speed until the datum switch is reset. The demand position is then reset to 0 and the measured position corrected so as to maintain the Following Error.
4	The axis moves at the demand speed in reverse until the datum switch is reached. The axis then moves forward at creep speed until the datum switch is reset. The demand position is then reset to 0 and the measured position corrected so as to maintain the Following Error.
5	The axis moves at demand speed forward until the datum switch is reached. The axis then reverses at creep speed until the datum switch is reset. The axis continues in reverse at creep speed until the Z marker of the encoder is encountered. The demand position is then reset to 0 and the measured position corrected so as to maintain the Following Error.
6	The axis moves at demand speed reverse until the datum switch is reached. The axis then moves forward at creep speed until the datum switch is reset. The axis continues forward at creep speed until the Z marker of the encoder is encountered. The demand position is then reset to 0 and the measured position corrected so as to maintain the Following Error.

Example

A production line must stop if something blocks the product belt, which causes a motion error. The obstacle must be removed, and a reset button must be pressed to restart the line.

```
FORWARD 'start production line
WHILE IN(2)=ON
  IF MOTION_ERROR=0 THEN
    OP(8,ON) 'green light on; line is in motion
  ELSE
    OP(8, OFF)
    GOSUB error_correct
  ENDIF
WEND
CANCEL
STOP

error_correct:
  REPEAT
    OP(10,ON)
    WA(250)
    OP(10,OFF) 'flash red light to show crash
    WA(250)
  UNTIL IN(1)=OFF
  DATUM(0) 'reset axis status errors
  SERVO=ON 'turn the servo back on
  WDOG=ON 'turn on the watchdog
  OP(9,ON) 'sound siren that line will restart
  WA(1000)
  OP(9,OFF)
  FORWARD 'restart motion
RETURN
```

fig. 21

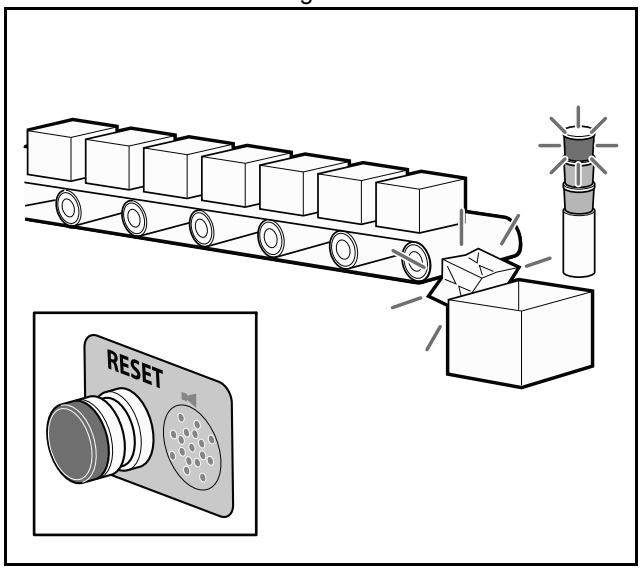

Example The position of an axis must be defined by the Z marker. This position must be set to zero. Then the axis must move to this position. Using the datum 1 the zero point is set on the Z mark. But the axis starts to decelerate at this point, and therefore it stops after the mark. A move is used to bring it back to the Z position.

```
SERVO=ON
WDOG=ON
CREEP=1000 'set the search speed
SPEED=5000 'set the return speed
DATUM(1) 'register on Z mark and sets this to datum
WAIT IDLE
MOVEABS (0) 'moves to datum position
```

fig. 22

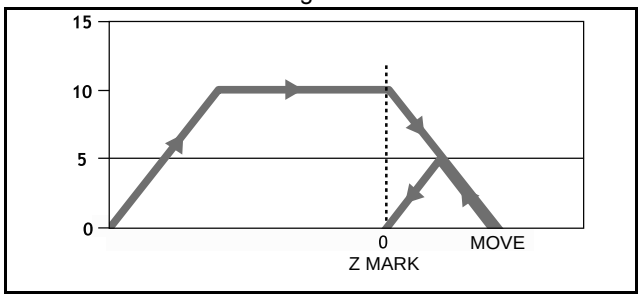

Example A machine must return to its home position defined by the limit switch which is found at the rear of the move before operation. This can be achieved through using **DATUM(4)** which moves in reverse to find the switch.

```
SERVO=ON
WDOG=ON
REV_IN=-1 'temporarily turn off the limit switch function
DATUM_IN=5 'sets input 5 for registration
SPEED=5000 'set speed, for quick location of limit switch
CREEP=500 'set creep speed for slow move to find edge of switch
DATUM(4) 'find edge at creep speed and stop
WAIT IDLE
DATUM_IN=-1
REV_IN=5 'restore input 5 as a limit switch again
```

fig. 23

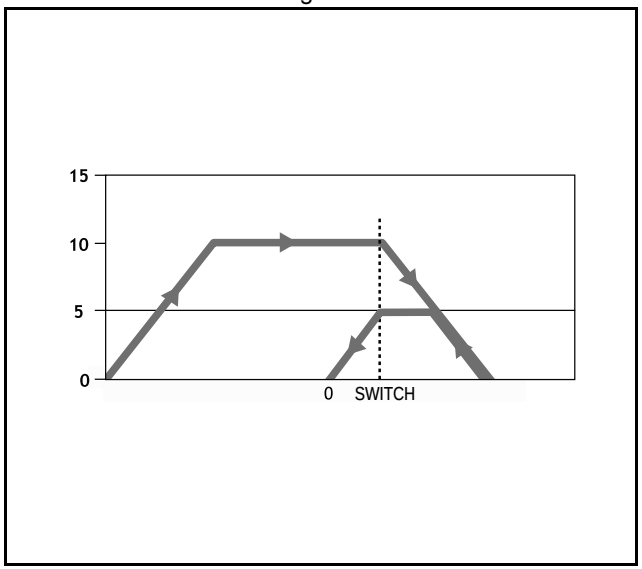

Example

A machine similar to the machine in the example above must locate a home switch, which is at the forward end of the move. The machine then moves backwards to the next Z marker, and set this Z marker as the datum. This is done with **DATUM(5)**, which moves forward at **SPEED** to locate the switch, then reverses at **CREEP** to the Z marker. If required, a move is made to the datum Z marker.

```
SERVO=ON
WDOG=ON
DATUM_IN=7 'sets input 7 as home switch
SPEED=5000 'set speed, for quick location of switch
CREEP=500 'set creep speed for slow move to find edge of switch
DATUM(5) 'start the homing sequence
WAIT IDLE
```

See also

ACCEL, **AXIS**, **AXIS_FS_LIMIT**, **CREEP**, **DATUM_IN**, **DECEL**, **MOTION_ERROR**, **SPEED**.

fig. 24

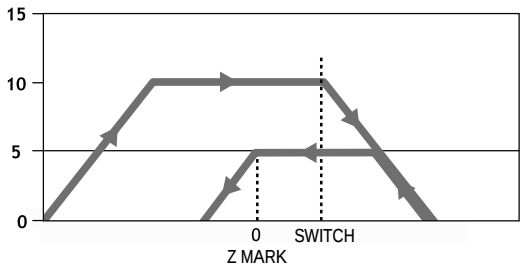

3.2.87 DATUM_IN

Type	Axis parameter
Syntax	**DATUM_IN** **DAT_IN**
Description	The **DATUM_IN** axis parameter contains the input number to be used as the datum switch input for the **DATUM** command. The valid input range is given by 0 to 31. Values 0 to 15 represent physically present inputs of TJ2-MC__ I/O connector and are common for all axes. Values 16 to 31 are mapped directly to Drive inputs that are present on the CN1 connector. They are unique for each axis. It depends on the type of Servo Drive which Servo Drive inputs are mapped into inputs 16 to 31. Note: The origin input is active low, i.e., the origin switch is set when the input is OFF. The feedhold, reverse jog, forward jog, forward and reverse limit inputs are also active low. Active low inputs are used to enable fail-safe wiring.
Arguments	N/A
Example	**DATUM_IN AXIS(0)=5**
See also	**AXIS**, **DATUM**.

3.2.88 DAY

Type	System parameter (read only)
Syntax	**DAY**
Description	Returns the current day as a number 0..6, Sunday is 0.
Arguments	N/A
Example	**>>? DAY** **3.0000**
See also	N/A

3.2.89 DAY$

Type	System command
Syntax	**DAY$**
Description	Prints the current day as a string.
Arguments	N/A
Example	**>>? DAY$** **Wednesday**
See also	N/A

3.2.90 DECEL

Type	Axis parameter
Syntax	**DECEL**
Description	The **DECEL** axis parameter contains the axis deceleration rate. The rate is set in units/s^2. The parameter can have any positive value including 0.
Arguments	N/A
Example	**DECEL = 100 ' Set deceleration rate** **PRINT " Deceleration rate is ";DECEL;" mm/s/s"**
See also	**ACCEL**, **AXIS**, **UNIT_INIT**.

3.2.91 DECEL_ANGLE

Type	Axis parameter
Syntax	**DECEL_ANGLE**
Description	Used to define the angle change in radians above which an X-Y system should start to decelerate. Operation of **DECEL_ANGLE** applies to forced speed moves and depends on setting of **STOP_ANGLE** and **CORNER_MODE**.

Arguments N/A

Example **' Decelerate above 15 deg (0.2618 rad)**
DECEL_ANGLE = 0.2618

See also **ACCEL**, **AXIS**, **UNIT_INIT**.

3.2.92 DEFPOS

Type Axis command

Syntax **DEFPOS(pos_1 [, pos_2 [, pos_3 [, pos_4 [, ...]]]])**
DP(pos_1 [, pos_2 [, pos_3 [, pos_4 [, ...]]]])

Description The **DEFPOS** command defines the current demand position (**DPOS**) as a new absolute position. The measured position (**MPOS**) will be changed accordingly in order to keep the Following Error. **DEFPOS** is typically used after an origin search sequence (see DATUM command), as this sets the current position to 0. **DEFPOS** can be used at any time.
As an alternative also the **OFFPOS** axis parameter can be used. This parameter can be used to perform a relative adjustment of the current position.
DEFPOS works on the default basis axis or axis sequence group (set with **BASE**) unless **AXIS** is used to specify a temporary base axis.
Note: The changes to the axis position made using DEFPOS or OFFPOS are made on the next servo update. This can potentially cause problems when a move is initiated in the same servo period as the DEFPOS or OFFPOS.
The following example shows how the **OFFPOS** parameter can be used to avoid this problem. DEFPOS commands are internally converted into **OFFPOS** position offsets, which provides an easy way to avoid the problem by programming as follows:
DEFPOS(100): WAIT UNTIL OFFPOS = 0: MOVEABS(0)

Arguments The command can take up to 64 arguments.

- **pos_i**
  The absolute position for (base+i) axis in user units. Refer to the **BASE** command for the grouping of the axes.

Example

After 2 axes returned to their homing positions, it is required to change the **DPOS** values so that the home positions are not zero, but some defined positions instead.

DATUM(5) AXIS(1) ' home both axes. At the end of the DATUM
DATUM(4) AXIS(3) ' procedure, the positions are 0,0.
WAIT IDLE AXIS(1)
WAIT IDLE AXIS(3)
BASE(1,3) ' set up the BASE array
DEFPOS(-10,-35) ' define positions of the axes to be -10 and -35

fig. 25

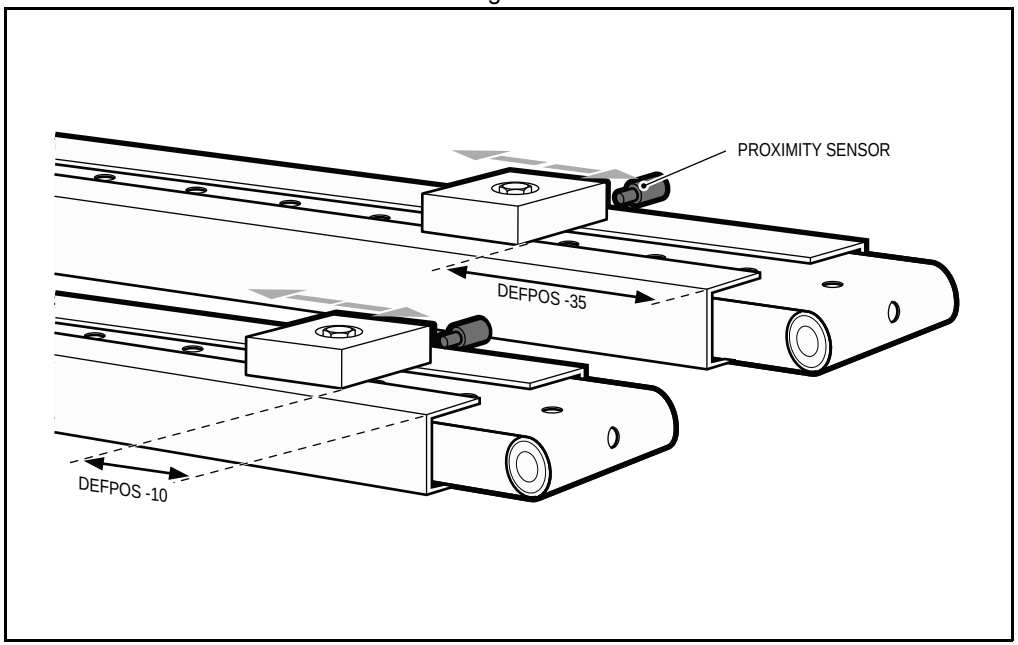

Example Set the axis position to 10, then start an absolute move, but make sure the axis has updated the position before loading the **MOVEABS**.

```
DEFPOS(10.0)
WAIT UNTIL OFFPOS=0
' Makes sure that DEFPOS is complete before next line
MOVEABS(25.03)
```

fig. 26

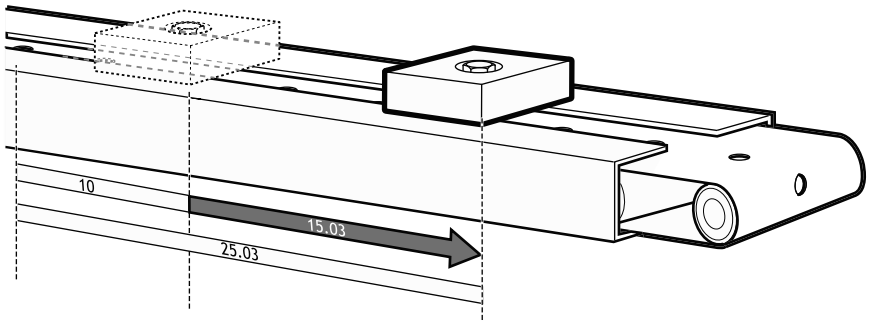

Example From the Command Line of the Terminal window, quickly set the **DPOS** values of the first four axes to 0.

```
>>BASE(0)
>>DP(0,0,0,0)
```

See also **AXIS**, **DATUM**, **DPOS**, **OFFPOS**, **MPOS**, **UNIT_INIT**.

fig. 27

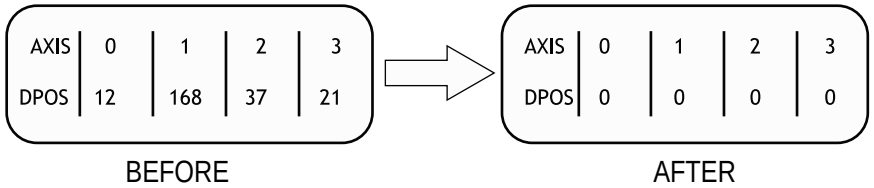

3.2.93 DEL

Type: Program command

Syntax: **DEL [program_name]**
RM [program_name]

Description: The **DEL** command deletes a program from the controller. **DEL** without a program name can be used to delete the currently selected program (using **SELECT**). The program name can also be specified without quotes. **DEL ALL** will delete all programs.
DEL can also be used to delete the Table: **DEL "TABLE"**. The name **"TABLE"** must be in quotes.
Note: This command is implemented for the Command Line Terminal.

Arguments:
- **program_name**
  Name of the program to be deleted.

Example: **>> DEL oldprog**

See also: **COPY**, **NEW**, **RENAME**, **SELECT**, **TABLE**.

3.2.94 DEMAND_EDGES

Type: Axis parameter (read-only)

Syntax: **DEMAND_EDGES**

Description: The **DEMAND_EDGES** axis parameter contains the current value of the **DPOS** axis parameter in encoder edge units.

Arguments: N/A

Example: No example.

See also: **AXIS**, **DPOS**.

3.2.95 DEVICENET

Type: System command

Syntax: **DEVICENET(unit_number, 2, 1, VR_start_outputs, no_outputs, VR_start_inputs, no_inputs)**
DEVICENET(unit_number, 4, 0)

Description: **DEVICENET** function 2 configures the TJ1-DRT for data exchange with the DeviceNet master unit and defines areas in the VR memory where I/O exchange takes place. **DEVICENET** function 4 returns the data exchange status of the TJ1-DRT. Refer to the table below for the description of the bits in the data exchange status word.

Bit	Value	Description
0	0	Command **DEVICENET (unit_number, 2, ...)** not executed yet
	1	**Command DEVICENET (unit_number, 2, ...)** executed without error
1	0	No DeviceNet I/O connection
	1	DeviceNet I/O connection running
2	0	VR variables in the output data range have been updated
	1	VR variables in the output data range have not been updated yet
3	0	DeviceNet I/O connection size matches the **DEVICENET (unit_number, 2,…)** command
	1	DeviceNet I/O connection size does not match the **DEVICENET(unit_number, 2,…)** command
4-7	0	Always zero
8	0	Network power OK
	1	Network power failure
9	0	No BUSOFF occurred
	1	BUSOFF occurred

Bit	Value	Description
10	0	No node address duplication error
	1	Node address duplication error

Arguments
- **unit_number**
  Specifies the unit number of the TJ1-DRT in the Trajexia system.
- **VR_start_outputs**
  The starting address in VR memory of the controller where the output data from the DeviceNet master is located.
- **no_outputs**
  The number of output words from the DeviceNet master in VR memory.
- **VR_start_inputs**
  The starting address in VR memory of the controller where the input data for the DeviceNet master is located.
- **no_inputs**
  The number of input words to the DeviceNet master in VR memory.

Example **DEVICENET (0,2,1,10,16,150,31)**
In this example, the TJ1-DRT is configured to exchange data with DeviceNet master with 16 output words (received from the master) located at VR(10) to VR(25), and 31 input words (sent to the master) located at VR(150) to VR(180).

See also N/A

3.2.96 DIR

Type Program command

Syntax **DIR**
LS

Description The **DIR** command shows a list of the programs held in the controller, the memory size and the **RUNTYPE**. DIR also shows the available memory size, power up mode and current selected program of the controller.
Note: This command is implemented for the Command Line Terminal only.

Arguments N/A

Example No example.

See also **FREE**, **PROCESS**, **RUNTYPE**, **SELECT**.

3.2.97 DISABLE_GROUP

Type Axis command

Syntax **DISABLE_GROUP(-1)**
DISABLE_GROUP(axis_1 [, axis_2 [, ...]])

Description The **DISABLE_GROUP** is used to create a group of axes which will be disabled if there is a motion error in any or more axes in the group. After the group is made, when an error occurs on **one** they will all have their **AXIS_ENABLE** set OFF and **SERVO** set OFF. Multiple groups can be made, although an axis cannot belong to more than one group. All groupings can be cleared using **DISABLE_GROUP(-1)**.
Notes:
- For use with MECHATROLINK-II and EtherCAT only.
- Typically used in combination with robot applications.

Arguments
- **axis_i**
  A BASIC expression that evaluates to an axis number.

Example A machine has 2 functionally separate parts, which have their own emergency stop and operator protection guarding. If there is an error on one part of the machine, the other part can continue to run while the cause of the error is removed and the axis group restarted. For this, 2 separate axis groupings must be set up.

```
DISABLE_GROUP(-1) ' remove any previous axis groupings
DISABLE_GROUP(0,1,2,6) ' group axes 0 to 2 and 6
DISABLE_GROUP(3,4,5,7) ' group axes 3 to 5 and 7
WDOG=ON ' turn on the enable relay and the remote drive enable
FOR ax=0 TO 7
  AXIS_ENABLE AXIS(ax)=ON ' enable the 8 axes
  SERVO AXIS(ax)=ON ' start position loop servo for each axis
NEXT ax
```

Example

Two conveyors operated by the same Motion Coordinator are required to run independently, to make sure that the second conveyor does not stop if the first conveyor is blocked.

```
DISABLE_GROUP(0) 'put axis 0 in its own group
DISABLE_GROUP(1) 'put axis 1 in another group
GOSUB group_enable0
GOSUB group_enable1
WDOG=ON
FORWARD AXIS(0)
FORWARD AXIS(1)
WHILE TRUE
  IF AXIS_ENABLE AXIS(0)=0 THEN
    PRINT "motion error axis 0"
    reset_0_flag=1
  ENDIF
  IF AXIS_ENABLE AXIS(1)=0 THEN
    PRINT "motion error axis 1"
    reset_1_flag=1
  ENDIF
  IF reset_0_flag=1 AND IN(0)=ON THEN
    GOSUB group_enable0
    FORWARD AXIS(0)
    reset_0_flag=0
  ENDIF
  IF reset_1_flag=1 AND IN(1)=ON THEN
    GOSUB group_enable1
    FORWARD AXIS(1)
    reset_1_flag=0
  ENDIF
WEND
group_enable0:
  BASE(0)
  DATUM(0) ' clear motion error on axis 0
  WA(10)
  AXIS_ENABLE=ON
RETURN
group_enable1:
  BASE(1)
```

fig. 28

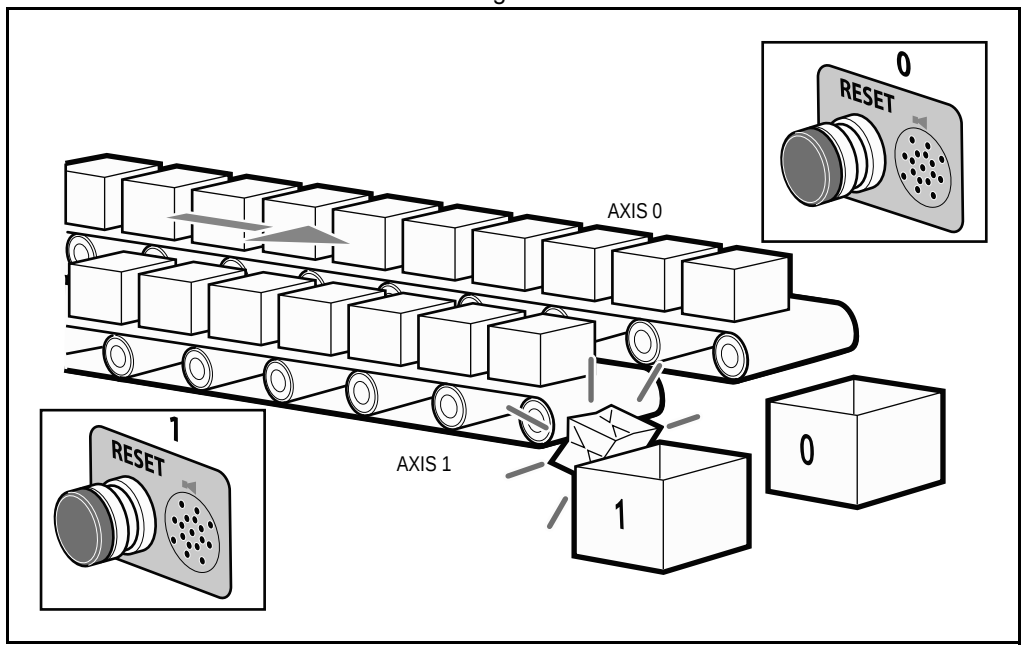

```
  DATUM(0) ' clear motion error on axis 0
  WA(10)
  AXIS_ENABLE=ON
  SERVO=ON
RETURN
```

Example One group of axes in a machine must be reset if a motion error occurs, without affecting the remaining axes. This must be done manually by clearing the cause of the error, pressing a button to clear the error flags of the controllers and re-enabling the motion.

```
DISABLE_GROUP(-1) 'remove any previous axis groupings
DISABLE_GROUP(0,1,2) 'group axes 0 to 2
GOSUB group_enable 'enable the axes and clear errors
WDOG=ON
SPEED=1000
FORWARD
WHILE IN(2)=ON
  check axis 0, but all axes in the group will disable together
  IF AXIS_ENABLE =0 THEN
    PRINT "Motion error in group 0"
    PRINT "Press input 0 to reset"
    IF IN(0)=0 THEN 'checks if reset button is pressed
      GOSUB group_enable 'clear errors and enable axis
      FORWARD 'restarts the motion
    ENDIF
  ENDIF
WEND
STOP 'stop program running into sub routine
group_enable: 'Clear group errors and enable axes
  DATUM(0) 'clear any motion errors
  WA(10)
  FOR axis_no=0 TO 2
    AXIS_ENABLE AXIS(axis_no)=ON 'enable axes
    SERVO AXIS(axis_no)=ON 'start position loop servo
  NEXT axis_no
  RETURN
```

See also N/A

3.2.98 DISPLAY

Type System parameter

Syntax **DISPLAY=value**

Description Determines the I/O channels to be displayed on the front panel LEDs. The **DISPLAY** parameter may be used to select which bank of I/O should be displayed. The parameter default value is 0.
The values are in the table below.

value	Description
0	Inputs 0 to 7 (default)
1	Inputs 8 to 15
2	Inputs 16 to 23
3	Inputs 24 to 31
4	Outputs 0 to 7 (not used on Trajexia)
5	Outputs 8 to 15
6	Outputs 16 to 23
7	Outputs 24 to 31

Arguments N/A

Example **DISPLAY=5**
Shows outputs 8-15.

See also N/A

3.2.99 DPOS

Type: Axis parameter (read-only)

Syntax: **DPOS**

Description: The **DPOS** axis parameter contains the demand position in user units, which is generated by the move commands in servo control. When the controller is in open loop (**SERVO=OFF**), the measured position (**MPOS**) will be copied to the **DPOS** in order to maintain a 0 Following Error.
The range of the demand position is controlled with the **REP_DIST** and **REP_OPTION** axis parameters. The value can be adjusted without doing a move by using the **DEFPOS** command or **OFFPOS** axis parameter. **DPOS** is reset to 0 at start-up or controller reset.

Arguments: N/A

Example:
```
>> PRINT DPOS AXIS(0)
34.0000
```
The above line will return the demand position in user units.

See also: **AXIS**, **DPOS**, **DEFPOS**, **DEMAND_EDGES**, **FE**, **MPOS**, **REP_DIST**, **REP_OPTION**, **OFFPOS**, **UNIT_INIT**.

3.2.100 DRIVE_ALARM

Type: Axis command

Syntax: **DRIVE_ALARM(VR [, index])**

Description: The DRIVE_ALARM function reads the current alarm of the Servo Drive that is connected to the Trajexia system via MECHATROLINK-II, EtherCAT or TJ2-KS02. Upon successful execution, the command returns -1 and stores the value in the VR memory location specified by the VR parameter. If the command cannot be executed, the value 0 is returned. The command is executed on the Drive for the base axis set by BASE. The base axis can be changed with the AXIS modifier, as with all the other axis commands and parameters.
When the **index** is supplied, the alarm history is read with index pointing to the entry in the history. For MECHATROLINK-II the active alarms are being read. For EtherCAT and TJ2-KS02 the past alarms are being read.
Notes:
- This command waits for the response of the axis so, its execution is slow and the time variable. Do not use this command together with other commands that require quick execution.
- Using **DRIVE_ALARM** to read the history is not possible when registration is active in order to give priority to registration. This is applicable when connecting via the MECHATROLINK-II network or via the TJ2-KS02.

Arguments:
- **VR**
  The alarm value is stored on the VR address on successful execution.
- **index**
  Position to read in the alarm history, 0 being the most recent.

Example:
```
IF NOT DRIVE_ALARM(10) AXIS(2) THEN
  PRINT "Failed to readalarm for Servo Drive"
ELSE
  IF VR(10) = 0 THEN
    PRINT "ServoDrive healthy"
  ELSE
    PRINT "Servoalarm code: "; VR(10)
  ENDIF
ENDIF
```
This example reads an alarm of the Servo Drive driving axis 2 and present that information to the user.

See also: N/A

3.2.101 DRIVE_CLEAR

Type Axis command

Syntax **DRIVE_CLEAR**

Description The **DRIVE_CLEAR** command clears the alarm status of the Servo Drive connected via the MECHATROLINK-II or EtherCAT network or via the TJ2-KS02. This command is not capable of clearing all the possible alarm states. Some alarms can only be cancelled by turning off the power supply (both the TJ2-MC__ and the Servo Drive), and then turning it on again. Also, an alarm will not be cleared if the cause of the alarm is still present. The command is executed on the Drive for the base axis set by BASE. The base axis can be changed with the AXIS modifier, as with all the other axis commands and parameters.

Arguments N/A

Example No example.

See also **DRIVE_STATUS**.

CAUTION
Be sure that no Parameter Unit or Personal Computer Software is connected to the Servo Drive when executing this command. Otherwise the program task will be paused until the connection of the other device to the Servo Drive is removed.

3.2.102 DRIVE_CONTROL

Type Axis parameter

Syntax **DRIVE_CONTROL**

Description When applied to an axis driven by the Servo Drive connected to the system via the MECHATROLINK-II network, this parameter selects the data to be monitored by **DRIVE_MONITOR** according to the table below.

Code	Description (MECHATROLINK-II)
2	Following error (this is the real FE when ATYPE=40 is used)
8	Feedback speed (With ATYPE=41 Units=Max Speed/40000000H, with other ATYPE Units= reference units/s)
9	Command speed (units same as in Feedback Speed)
10	Target speed (units same as in Feedback Speed)
11	Torque (Force) reference (With ATYPE=42 Units=Max Torque/40000000H, with other ATYPE Units= % over nominal Torque
14	Monitor selected with Pn813.0 Useful to monitor servo monitors (Unxxx)
15	Monitor selected with Pn813.1 Useful to monitor servo monitors (Unxxx)

Description When applied to an axis driven by the Servo Drive connected to the system via the EtherCAT network, this parameter selects the data to be monitored by **DRIVE_MONITOR** according to the table below.

Code	Description (EtherCAT)	
	Accurax G5-ECT-R (V1.x)	**Accurax G5-ECT (V2.x)**
1	Error code (object 603Fh)	
2	Statusword (object 6041h)	
3	Position actual value (object 6064h)	
4	Torque actual value (object 6077h)	
5	Following error actual value (object 60F4h)	
6	Touch probe status (object 60B9h)	Modes of operation display (object 6061h)
7	Touch probe pos1 pos value (object 60BAh)	Touch probe status (object 60B9h)
8	Touch probe pos2 pos value (object 60BCh)	Touch probe pos1 pos value (object 60BAh)

9	Digital inputs (object 60FDh)	Touch probe pos2 pos value (object 60BCh)
10	Reserved	Digital inputs (object 60FDh)

Description When applied to an axis driven by the Servo Drive connected to the system via the TJ2-KS02, this parameter selects the data to be monitored by **DRIVE_MONITOR** according to the table below.

Code	Description (Accurax G5-A/P)
0	Command Position (after filter) (Pulse)
1	Feedback Position (Actual Position) (Pulse)
2	Latch Position 1 (Pulse)
3	Latch Position 2 (Pulse)
4	Following Error (Pulse)
16	Command Velocity (Pulse/s)
17	Actual Velocity (Pulse/s)
32	Command Torque (0.1%)
48	Pulse Counter Value (Pulse)
49	AD1 (CN1-14) Converted Value (27889/10V)
50	AD2 (CN1-16) Converted Value (27889/10V)
51	AD3 (CN1-18) Converted Value (27889/10V)

When applied to an axis driven by the Servo Drive connected to the system via the TJ1-FL02, this parameter sets outputs of the TJ1-FL02. Set bit 8 of this parameter to switch on OUT 0 for an axis. Set bit 9 of this parameter to switch on OUT 1 for an axis. Keep in mind that the same outputs are used by the **HW_PSWITCH** command.
The command is executed on the Drive for the base axis set by BASE. The base axis can be changed with the AXIS modifier, as with all the other axis commands and parameters.

Arguments N/A

Example **DRIVE_CONTROL AXIS(2) = 256**
In this example, OUT 0 is switched on for axis 2, connected using the TJ1-FL02.

See also **DRIVE_MONITOR**

3.2.103 DRIVE_INPUTS

Type Axis parameter

Syntax **DRIVE_INPUTS**

Description This parameter monitors the status of the inputs of the Servo Drive connected via the MECHATROLINK-II or EtherCAT network or via the TJ2-KS02. The parameter value is updated each **SERVO_PERIOD** cycle. It is a bit-wise word with the bits as listed in the table below.

Bit no.	Servo Drive input signal				Description
	Sigma-II	Sigma-V	Junma	G/G5-series	
0	P_OT	P_OT	P_OT	P_OT	Forward limit switch
1	N_OT	N_OT	N_OT	N_OT	Reverse limit switch
2	DEC	DEC	/DEC	DEC	Zero point return deceleration
3	PA	PA	Not used	Not used	Encoder A phase signal
4	PB	PB	Not used	Not used	Encoder B phase signal
5	PC	PC	Not used	PC	Encoder C phase signal
6	EXT1	EXT1	/EXT1	EXT1	First external latch signal
7	EXT2	EXT2	Not used	EXT2	Second external latch signal
8	EXT3	EXT3	Not used	EXT3	Third external latch signal
9	BRK	BRK	/BRK	BRK	Brake output
10	Reserved	HBB	E-STP	E-STP	Emergency stop switch
11	Reserved	Reserved	Not used	SI2	General input 2
12	IO12	IO12	Not used	PCL	General input 12 (Sigma-II and Sigma-V), Torque limit input in positive direction (G/G5)
13	IO13	IO13	Not used	NCL	General input 13 (Sigma-II and Sigma-V), Torque limit input in negative direction (G/G5)
14	IO14	IO14	Not used	SI0	General input 14 (Sigma-II and Sigma-V), General input 0 (G/G5)
15	IO15	IO15	Not used	SI1	General input 15 (Sigma-II and Sigma-V), General input 1 (G/G5)

For The Accurax G-A/P Servo Drive, the **DRIVE_INPUTS** parameter reflects the status of the physical input and output signals.

Bit no.	Servo Drive input signal	Description
0	SI1	Multi-function input 1
1	SI2	Multi-function input 2
2	SI3	Multi-function input 3
3	SI4	Multi-function input 4
4	SI5	Multi-function input 5
5	SI6	Multi-function input 6
6	SI7	Multi-function input 7
7	SI8	Multi-function input 8
8	SI9	Multi-function input 9
9	SI10	Multi-function input 10
10	SO5	Multi-function output 5
11	SO6	Multi-function output 6
12	SO1	Multi-function output 1
13	SO3	Multi-function output 3
14	Reserved	
15	SO4	Multi-function output 4

Refer to section 5.1.4 for more information about mapping Servo Drive inputs and outputs.
The command is executed on the Drive for the base axis set by **BASE**. The base axis can be changed with the **AXIS** modifier, as with all the other axis commands and parameters.

Arguments N/A

Example No example.

See also N/A

3.2.104 DRIVE_MONITOR

Type: Axis parameter

Syntax: **DRIVE_MONITOR**

Description: This parameter contains the monitored data of the Servo Drive connected to the system via the MECHATROLINK-II or EtherCAT network or via the TJ2-KS02. The data to be monitored is selected using **DRIVE_CONTROL** and can be displayed in the Trajexia Studio scope or used inside a program. The monitored data is updated each **SERVO_PERIOD**. The command is executed on the Drive for the base axis set by **BASE**. The base axis can be changed with the **AXIS** modifier, as with all the other axis commands and parameters.
Note:
- When registration is enabled in the drive connected to the TJ2-KS02, the **DRIVE_MONITOR** parameter will not be updated.

Arguments: N/A

Example: No example.

See also: **DRIVE_CONTROL**

3.2.105 DRIVE_OUTPUTS

Type: Axis parameter

Syntax: **DRIVE_OUTPUTS**

Description: This parameter controls the status of the outputs of the Servo Drive connected via the TJ2-KS02. The parameter value is updated each **SERVO_PERIOD** cycle. It is a bit-wise word with the bits as listed in the table below.

Bit no.	Servo Drive signal		Description
	Accurax G5-A/P	SOn output selection parameter setting value	
0	S-CRTL1	20h	Serial control output 1
1	S-CRTL2	21h	Serial control output 2
2	S-CRTL3	22h	Serial control output 3
3-15	Reserved	---	---

The command is executed on the Drive for the base axis set by **BASE**. The base axis can be changed with the **AXIS** modifier, as with all the other axis commands and parameters.
Note: When allocating the serial control outputs, this must be done for all control-modes.

Arguments: N/A

Example: No example.

See also: N/A

3.2.106 DRIVE_READ

Type: Axis command

Syntax: **DRIVE_READ(parameter, size, VR)**

Description The **DRIVE_READ** function reads the specified parameter of the Servo Drive connected to the Trajexia system via the MECHATROLINK-II or EtherCAT network or via the TJ2-KS02. Upon successful execution, this command returns -1 and puts the read value in the VR memory location specified by the VR parameter. If the command cannot be executed, the value 0 is returned. The command is executed on the Drive for the base axis set with **BASE**. It can be changed using the **AXIS** modifier, like with all the other axis commands and parameters.

Notes:

- This command waits for the response of the axis so, its execution is slow and the time variable. Do not use this command together with other commands that require quick execution.
- Executing a **DRIVE_READ** will temporarily disable the Servo Drive Front Panel display (in case of Sigma-II).
- **DRIVE_READ** returns -1 on success. It returns 0 if the parameter number does not exist or has the wrong size.
- Reading of parameters is not possible and **DRIVE_READ** will return 0 when registration is active. This is applicable when connecting via the MECHATROLINK-II network or via TJ2-KS02.

Arguments

- **parameter**
  The number of the parameter to be read. Note that the parameter numbers are hexadecimal. The format of the data can be found in the Servo Drive manual.
  Note: when using Accurax G5 with MECHATROLINK-II interface, the parameter must be specified differently:
  - Specify the Menu Number (first digit) in hexadecimal
  - Specify the Parameter Number (last 2 digits) in decimal
  So Pn321 is accessed through parameter $300 +23 (300 is in hexadecimal and 23 is in decimal format)
- **size**
  SIze of the parameter is specified in bytes. For most parameters the size is normally 2 bytes. Some special parameters may be 4 bytes long. Sizes for each parameter can be found in the Servo Drive manual.
- **VR**
  The VR address where the read parameter is stored upon successful execution. Use -1 to print to the terminal.

Example

```
IF DRIVE_READ($100,2,1) THEN
  PRINT "The Speed loop gain is: ";VR(1)
ELSE
  PRINT "The speed loop gain could not be read"
ENDIF
```

See also **DRIVE_WRITE**, **HEX**, **$ (HEXADECIMAL INPUT)**.

CAUTION
Be sure that no Parameter Unit or Personal Computer Software is connected to the Servo Drive when executing this command. Otherwise the program task will be paused until the connection of the other device to the Servo Drive is removed.

3.2.107 DRIVE_RESET

Type Axis command

Syntax **DRIVE_RESET**

Description Some drive parameter changes require a either a power cycle of the drive or a CONFIG command to be executed to enable the change. The **DRIVE_RESET** performs the CONFIG command via the MECHATROLINK-II or EtherCAT network. The command is executed on the Drive for the base axis set by BASE. The base axis can be changed with the AXIS modifier, as with all the other axis commands and parameters.
Note: not supported by drives connected to TJ2-KS02.

Arguments N/A

Example No example.

See also N/A

CAUTION
Be sure that no Parameter Unit or Personal Computer Software is connected to the Servo Drive when executing this command. Otherwise the program task will be paused until the connection of the other device to the Servo Drive is removed.

3.2.108 DRIVE_STATUS

Type Axis parameter (read-only)

Syntax **DRIVE_STATUS**

Description For MECHATROLINK-II axes, this parameter is set from the STATUS field in the MECHATROLINK-II communication frame and is updated every servo period. These bits can be seen in the Servo Monitor tab of the Drive Configuration window in Trajexia Studio, and can be used in programs. The explanation of each bit is given in the table below. (Note: Only bits relevant to MECHATROLINK-II axes are listed.) For the detailed explanation for these status bits, see the MECHATROLINK-II manual.

Bit	Description (MECHATROLINK-II)
0	Alarm
1	Warning
2	Command Ready
3	Servo on
4	Power on
5	Machine Lock
6	Home Position
7	At Position/Speed
8	Output Completed
9	Torque Limit
10	Latch Completed (first Latch for Accurax G5)
11	In Range/Speed Limit
12	In Forward Software Limit (G-Series and Accurax G5 only)
13	In Reverse Software Limit (G-Series and Accurax G5 only)
14	Servo Ready (G-Series and Accurax G5 only)
15	Second Latch Completed (Accurax G5 only)
16 to 21	Reserved (internal use only)

For EtherCAT axes, this parameter is set from the CANopen statusword object (6041h) and is updated every servo period. These bits can be seen in the Servo Monitor tab of the Drive Configuration window in Trajexia Studio, and can be used in programs. The explanation of each bit is given in the table below. For the detailed explanation for these status bits, see the manual of the drive.

Bit	Description (EtherCAT)
0	Ready to switch on
1	Switched on
2	Operation enabled
3	Fault
4	Voltage enabled
5	Quick Stop
6	Switch on disabled
7	Warning
8	Reserved
9	Remote
10	Target reached
11	Internal limit active
12	Target value ignored
13	Following error
14 to 15	Reserved

Description For Accurax G5-A/P axes, this parameter is set from the communication frame and is updated every servo period. These bits can be seen in the Servo Monitor tab of the Drive Configuration window in Trajexia Studio, and can be used in programs. The explanation of each bit is given in the table below.

Bit	Description (Accurax G5-A/P)
0 to 1	Reserved
2	Homing complete
3	Torque limited
4	Warning
5	Alarm
6	Servo ready
7	Servo active
8	Latch1 complete
9	Latch2 complete
10 to 15	Reserved

For Flexible Axis axes, this parameter holds the status of registration and auxiliary inputs, as well as registration selection. The explanation of each bit is given in the table below. (Note: Only bits relevant to Flexible axis are listed.)

Bit	Description (Flexible Axis)
0	MARK
1	MARKB
2	REG 0 selected current value
3	REG 1 selected current value
4	AUX IN current value
5	REG 0 current value
6	REG 1 current value
7 to 13	Reserved (internal use only)

Arguments N/A

Example **PRINT DRIVE_STATUS AXIS(4)**
This command will print the current value of **DRIVE_STATUS** for axis(4).

Example
```
BASE(3)
ATYPE = 44
IF (DRIVE_STATUS AND 32)= 32 THEN
  PRINT "REG 0 input is ON for axis(3)"
ENDIF
```

See also **AXIS**, **MARK**, **MARKB**, **REGIST**.

3.2.109 DRIVE_WRITE

Type Axis command

Syntax **DRIVE_WRITE(parameter, size, value [,mode])**

Description The **DRIVE_WRITE** function writes to the specified parameter of the Servo Drive via the MECHATROLINK-II or EtherCAT network or via the TJ2-KS02. Upon successful execution, this command returns -1. If the command cannot be executed, the value 0 is returned. The command is executed on the Drive for the base axis set with **BASE**. It can be changed using the **AXIS** modifier, as with all other axis commands and parameters. For some parameters to be written the Drive needs to be powered off and on again. The **DRIVE_RESET** command can be used for that purpose in case of MECHATROLINK-II or EtherCAT.
Notes:
- This command waits for the response of the axis so, its execution is slow and the time variable. Do not use this command together with other commands that require quick execution.
- Executing a **DRIVE_WRITE** will temporarily disable the Servo Drive Front Panel display (in case of Sigma-II).
- **DRIVE_WRITE** returns -1 on success. It returns 0 if the parameter number does not exist or has the wrong size.
- Writing of parameters is not possible and **DRIVE_WRITE** will return 0 when registration is active. This is applicable when connecting via the MECHATROLINK-II network or via TJ2-KS02.

Arguments
- **parameter**
  The number of the parameter to write to. Note that the parameter numbers are hexadecimal. Refer to the Servo Drive manual for the format of the data.
  Note: when using Accurax G5 with MECHATROLINK-II interface, the parameter must be specified differently:
  - Specify the Menu Number (first digit) in hexadecimal
  - Specify the Parameter Number (last 2 digits) in decimal
  So Pn321 is accessed through parameter $300 +23 (300 is in hexadecimal and 23 is in decimal format)
- **size**
  SIze of the parameter is specified in bytes. For most parameters the size is normally 2 bytes. Some special parameters may be 4 bytes long. Sizes for each parameter can be found in the Servo Drive manual.
- **value**
  The value to be written into Drive parameter.
- **mode**
  The write mode. Possible values:
  0 (or omitted) - write and store in RAM
  1 - write and store in EPROM.

Example

```
IF DRIVE_WRITE($100,2,90) THEN
  PRINT "The new speed loop gain is: 90"
ELSE
  PRINT "The speed loop gain could not be written in RAM"
ENDIF
```

See also **DRIVE_READ**, **DRIVE_RESET**, **$ (HEXADECIMAL INPUT)**

CAUTION
Be sure that no Parameter Unit or Personal Computer Software is connected to the Servo Drive when executing this command. Otherwise the program task will be paused until the connection of the other device to the Servo Drive is removed.

3.2.110 ELSE

See **IF..THEN..ELSE..ENDIF**.

3.2.111 ELSEIF

See **IF..THEN..ELSE..ENDIF**.

3.2.112 ENCODER

Type	Axis parameter (read-only)
Syntax	**ENCODER**
Description	The **ENCODER** axis parameter contains a raw copy of the encoder hardware register or the raw data received from the drive via MECHATROLINK-II, EtherCAT or TJ2-KS02. On axes with absolute encoders, the **ENCODER** parameter contains a value using a number of bits programmed with **ENCODER_BITS**. The **MPOS** axis parameter contains the measured position calculated from the **ENCODER** value automatically, allowing for overflows and offsets.
Arguments	N/A
Example	No example.
See also	**AXIS**, **MPOS**.

3.2.113 ENCODER_BITS

Type	Axis parameter
Syntax	**ENCODER_BITS = value**
Description	This axis parameter configures the interface for the number of encoder bits for Flexible axis or TJ2-KS02 SSI and EnDat absolute encoder axes. The parameter is applicable only to axes of **ATYPE** values 47 and 48. When applied to Flexible axis EnDat absolute encoder axis, bits 0 - 7 of the parameter should be set to the total number of encoder bits. Bits 8 - 14 should be set to the number of multi-turn bits to be used. When applied to Flexible axis SSI absolute encoder axis, bits 0 - 5 of the parameter should be set to the number of encoder bits. Bit 6 should be 1 for binary operation, or 0 for Gray code. Bit 7 can be set to support Inverted Gray encoding (TJ2-KS02 only). For SSI encoders of the “Balluff” brand bits 8..10 allow an additional hardware shift to be specified. Normally bits 8..10 are 0. Note: If using Flexible axis absolute encoder axis, it is essential to set this parameter for the axis before setting the **ATYPE**. Note: Always make sure the correct value is set for the specific encoder type. Not doing so will result in unpredictable positions.
Arguments	N/A
Example	**ENCODER_BITS = 25 + (256 * 12)** **ATYPE = 47** In this example a 25 bit EnDat encoder is used, that has 12 bits for multi-turn value and 13 bits per one revolution.
Example	**ENCODER_BITS = 12 + (64 * 1)** **ATYPE = 48** In this example a 12 bit (4096 positions per revolution) SSI encoder is used, with binary output type.
See also	**AXIS**.

3.2.114 ENCODER_CONTROL

Type	Axis parameter
Syntax	**ENCODER_CONTROL = value**
Description	The **ENCODER_CONTROL** parameter is applicable only to Flexible axis or TJ2-KS02 absolute EnDat axis with ATYPE value 47. The parameter controls the mode in which EnDat encoder return its position. The encoder can be set to either cyclically return its position, or it can be set to a parameter read/write mode. The default after initialization is cyclic position return mode. For more information see EnDat absolute encoder interface specification.
Arguments	N/A
Example	**ENCODER_CONTROL AXIS(1) = 0** This command sets cyclic position return mode.
Example	**ENCODER_CONTROL AXIS(1) = 1** This command sets parameter read/write mode.
See also	**AXIS**, **ENCODER**, **ENCODER_BITS**.

3.2.115 ENCODER_ID

Type	Axis parameter (read-only)
Syntax	**ENCODER_ID**
Description	This parameter returns the ID value of an absolute encoder for the axis. This parameter is applicable only to Flexible axis absolute Tamagawa axis with **ATYPE** value 46. It returns ENID parameter from the encoder, which is set to 17. For more information see Tamagawa absolute encoder interface specification. If applied to axis of ATYPE value other than 46, this parameter returns 0.
Arguments	N/A
Example	**>>PRINT ENCODER_ID AXIS (1)** **17.0000** This command will print absolute encoder ID value for axis 1.
See also	**AXIS**, **ENCODER**, **ENCODER_BITS**.

3.2.116 ENCODER_RATIO

Type: Axis parameter

Syntax: **ENCODER_RATIO(numerator,denominator [,option])**

Description: This command allows the incoming encoder count to be scaled by a non integer number, using the equation:
MPOS = (numerator / demoninator) x encoder_edges_input
Unlike the **UNITS** parameters, **ENCODER_RATIO** affects commands like **MOVECIRC** and **CAMBOX**, since it affects the number of encoder edges within the servo loop at the low level. It is necessary to change the position loop gains after changing encoder ratio in order to maintain performance and stability.
Notes:

- Large ratios should be avoided as they will lead to either loss of resolution or much reduced smoothness in the motion. The actual physical encoder count is the basic resolution of the axis and the use of this command may reduce the ability of the Motion Controller to accurately achieve all positions.
- **ENCODER_RATIO** does not replace **UNITS**. Only use **ENCODER_RATIO** where absolutely necessary. For all other axis scaling use **UNITS**.
- **ENCODER_RATIO** only scales the position feedback, not the position command. When using it with MECHATROLINK or EtherCAT position axes, both the position feedback and position command must be scaled. Scaling the position command is done with **STEP_RATIO**. When setting the **option** parameter to 1, automatically **STEP_RATIO** will be set with the reciprocated values.
- Executing **ENCODER_RATIO** without parameters will print the current numerator and denominator.

Arguments:

- **numerator**
  A number between 0 and 16777215 that is used to define the numerator in the above equation.
- **denominator**
  A number between 0 and 16777215 that is used to define the denominator in the above equation.
- **option**
  Optional parameter to set **STEP_RATIO** with the reciprocated values.

Example:
' 7200 is the closest to the encoder resolution that can be devided by an
' integer to give degrees. (7200/20=360)
ENCODER_RATIO(8192,7200)
UNITS=20 ' axis calibrated in degrees, resolution is 0.05 deg.
A rotary table has a servo motor connected directly to its centre of rotation. An encoder is mounted to the rear of the servo motor and returns a value of 8192 counts per revolution. The application requires the table to be calibrated in degrees, but so that one degree is an integer number of counts.

Example: Using **ENCODER_RATIO** and **STEP_RATIO** to perform gearing on an EtherCAT drive.
ENCODER_RATIO(8192,7200,1)
The following commands will result in the same settings:
ENCODER_RATIO(8192,7200)
STEP_RATIO(7200,8192)

See also: **STEP_RATIO**

3.2.117 ENCODER_READ

Type: Axis command

Syntax: **ENCODER_READ(address)**

Description: The **ENCODER_READ** command is applicable only to Flexible axis or TJ2-KS02 absolute EnDat axis with **ATYPE** value 47. The parameter returns a 16-bit encoder parameter stored at specified address. Bits 8 -15 of the address are the EnDat MRS field settings and bits 0 - 7 are the offset within the EnDat MRS block. If a CRC error occurs, this command will return -1. For more information see EnDat absolute encoder interface specification.

Arguments:

- **address**
  Specifies the EnDat MRS field to read.

Example: **VR(100) = ENCODER_READ($A10D) AXIS(7)**
This command will read the number of encoder bits and put that value in VR(10) memory location.

See also: **AXIS**, **ENCODER**, **ENCODER_BITS**.

3.2.118 ENCODER_STATUS

Type	Axis parameter (read-only).
Syntax	**ENCODER_STATUS**
Description	This parameter returns the status of the absolute encoder. This parameter is applicable only to Flexible axis absolute Tamagawa axis with **ATYPE** value 46. It returns both the status field SF and the ALMC encoder error field. The SF field is in bits 0 - 7, while the ALMC filed is in bits 8 - 15. For more information see Tamagawa absolute encoder interface specification. If applied to axis of **ATYPE** value other than 46, this parameter returns 0.
Arguments	N/A
Example	**PRINT (ENCODER_STATUS AXIS (1) AND 255)** This command will print SF field of the Tamagawa absolute encoder for axis 1.
See also	**AXIS**, **ENCODER**, **ENCODER_BITS**.

3.2.119 ENCODER_TURNS

Type	Axis parameter (read-only)
Syntax	**ENCODER_TURNS**
Description	The **ENCODER_TURNS** parameter returns the number of multi-turn count from the encoder. This is applicable only to Flexible axis absolute Tamagawa axis with **ATYPE** value 46 and Flexible axis or TJ2--KS02 absolute EnDat axis with **ATYPE** value 47. The multi-turn data is not automatically applied to the axis **MPOS** parameter after initialization. The application programmer must apply this from the program using **OFFPOS** or **DEFPOS** commands as required. If applied to axis of **ATYPE** value other than 46 or 47, the parameter returns 0.
Arguments	N/A
Example	**PRINT ENCODER_TURNS AXIS (1)** This command will print absolute encoder multi-turn counts for axis 1.
See also	**AXIS**, **ENCODER**, **ENCODER_BITS**.

3.2.120 ENCODER_WRITE

Type	Axis command
Syntax	**ENCODER_WRITE(address, value)**
Description	The **ENCODER_WRITE** command is applicable only to Flexible axis or TJ2-KS02 absolute EnDat axis with **ATYPE** value 47. The command writes to an encoder parameter specified by the address. Bits 8 -15 of the address are the EnDat MRS field settings and bits 0 - 7 are the offset within the EnDat MRS block. If a CRC error occurs, this command will return 0. Writing to address 0 performs an encoder reset function.For more information see EnDat absolute encoder interface specification.In order to successfully write an encoder parameter with this command, the **ENCODER_CONTROL** parameter must be set to 1, encoder parameter read/write mode.
Arguments	• **address** Specifies the EnDat MRS field to write to. • **value** Any valid BASIC expression.
Example	No example.
See also	**AXIS**, **ENCODER**, **ENCODER_BITS**, **ENCODER_CONTROL**.

3.2.121 END_DIR_LAST

Type	Axis parameter
Syntax	**END_DIR_LAST**
Description	Allows the program to examine the end direction in radians of the last programmed **MOVESP**/**MOVEABSSP**/**MOVECIRCSP** move of 2 or more axes. **END_DIR_LAST** will be the same as **START_DIR_LAST** except in the case of circular moves. **END_DIR_LAST** is used by the system to calculate the change in angle when a new move is loaded. **END_DIR_LAST** can be written to. This is often required when initialising a system or after a sequence of moves which are not **MOVESP**/**MOVEABSSP**/**MOVECIRCSP** moves of 2 or more axes.
Arguments	N/A

Example	**>>MOVESP(10000,-10000)** **>>? END_DIR_LAST** **2.3562**
See also	**MOVESP**, **START_DIR_LAST**.

3.2.122 ENDIF

See **IF..THEN..ELSE..ENDIF**.

3.2.123 ENDMOVE

Type	Axis parameter
Syntax	**ENDMOVE**
Description	The **ENDMOVE** axis parameter holds the position of the end of the current move in user units. If the **SERVO** axis parameter is ON, the **ENDMOVE** parameter can be written to produce a step change in the demand position (**DPOS**). Note: As the measured position is not changed initially, the Following Error limit (**FE_LIMIT**) should be considered when writing to **ENDMOVE** to produce a step change. If the change of demanded position is too big, the limit will be exceeded.
Arguments	N/A
Example	No example.
See also	**AXIS**, **DPOS**, **FE_LIMIT**, **UNIT_INIT**.

3.2.124 ENDMOVE_BUFFER

Type	Axis parameter (read only)
Syntax	**ENDMOVE_BUFFER**
Description	This holds the absolute position at the end of the buffered sequence. It is adjusted by **OFFPOS**/**DEFPOS**. The individual moves in the buffer are incremental and do not need to be adjusted by **OFFPOS**.
Arguments	N/A
Example	No example.
See also	**MOVES_BUFFERED**, **USER_FRAME**

3.2.125 ENDMOVE_SPEED

Type	Axis parameter
Syntax	**ENDMOVE_SPEED = value**
Description	The **ENDMOVE_SPEED** parameter is used to directly control the ramp to exit speed when forced speed moves (**MOVESP**, **MOVEABSSP**, **MOVECIRCSP**,) are loaded. The **ENDMOVE_SPEED** parameter should be set to the required value at the time of loading the move into the buffer. If two forced speed move types are merged, the speed at the merge point is controlled by the **ENDMOVE_SPEED** of the outgoing move. If a forced speed move follows one or more non-forced speed moves the deceleration will occur to the **FORCE_SPEED** of the incoming move.
Arguments	N/A
Example	**ENDMOVE_SPEED=2000**
See also	**MOVESP**, **FORCE_SPEED**

3.2.126 ERROR_AXIS

Type	System parameter (read-only)
Syntax	**ERROR_AXIS**
Description	The **ERROR_AXIS** axis parameter contains the number of the axis which has caused the motion error. A motion error occurs when the **AXISSTATUS** state for one of the axes matches the **ERRORMASK** setting. In this case the enable switch (**WDOG**) will be turned off, the **MOTION_ERROR** parameter will have value different than 0 and the **ERROR_AXIS** parameter will contain the number of the first axis to have the error.
Arguments	N/A
Example	No example.
See also	**AXIS_FS_LIMIT**, **ERRORMASK**, **MOTION_ERROR**, **WDOG**.

3.2.127 ERROR_LINE

Type	Task parameter (read-only)
Syntax	**ERROR_LINE**
Description	The **ERROR_LINE** parameter contains the number of the line which caused the last BASIC run-time error in the program task. This value is only valid when the **BASICERROR** parameter is **TRUE**. Each task has its own **ERROR_LINE** parameter. Use the **PROC** modifier to access the parameter for a certain task. Without **PROC**, the current task will be assumed.
Arguments	N/A
Example	**>> PRINT ERROR_LINE PROC(4)** **23.0000**
See also	**BASICERROR**, **PROC**, **RUN_ERROR**.

3.2.128 ERRORMASK

Type	Axis parameter
Syntax	**ERRORMASK**
Description	The **ERRORMASK** axis parameter contains a mask value that is **AND**ed bit by bit with the **AXISSTATUS** axis parameter on every servo cycle to determine if a motion error has occurred. If the result of the AND operation is not zero, the motion error has occurred. When a motion error occurs the enable switch (**WDOG**) will be turned off, the **MOTION_ERROR** parameter will have value different than 0 and the **ERROR_AXIS** parameter will contain the number of the first axis to have the error. Check the **AXISSTATUS** parameter for the status bit allocations. The default setting of **ERRORMASK** is 268.
Arguments	N/A
Example	No example.
See also	**AXIS**, **AXIS_FS_LIMIT**, **MOTION_ERROR**, **WDOG**.

CAUTION

It is up to the user to define in which cases a motion error is generated. For safe operation it is strongly recommended to generate a motion error when the Following Error has exceeded its limit in all cases. This is done by setting bit 8 of **ERRORMASK**

3.2.129 ETHERCAT

Type	System command
Syntax	**ETHERCAT(function, parameter1 [,parameter2 …])**
Description	Command to control and access the EtherCAT network and its functions. Notes: • This command waits for the response of the device so, its execution is slow and the time variable. Do not use this command together with other commands that require quick execution. • The **ETHERCAT** command returns -1 (**TRUE**) on success and 0 (**FALSE**) on failure.
Arguments	**ETHERCAT(0, unit_number)** To initialise the EtherCAT network, attached to the EtherCAT master at the unit number specified. • **function 0** Function 0 to initialise the EtherCAT network • **unit_number** Unit number of the EtherCAT master

When initialising the EtherCAT network the following is printed to the terminal:
EtherCAT State: Init (0)
EtherCAT State: Pre-Operational (0)
EtherCAT State: Safe-Operational (0)
EtherCAT State: Operational (0)
EtherCAT Configuration (0):
DeviceName **: A : B : C (D)**

DeviceName: Shows a short name of the connected device.
A: The node location on the network. 0 = first node, 1 = second node etc.
B: The Node Address set by switches or an EPROM parameter in the node.
C: The Node Address assigned by the TJ2-MC__
D: The Axis number assigned to the drive by the TJ2-MC__, or
The I/O introduced by the device to the system, in the following format:
(D1:D2 / D3:D4 / D5:D6 / D7:D8)
D1: start of digital inputs
D2: number of digital inputs
D3: start of digital outputs
D4: number of digital outputs
D5: start of analog inputs
D6: number of analog inputs
D7: start of analog outputs
D8: number of analog outputs

Example

EtherCAT State: Init (0)
EtherCAT State: Pre-Operational (0)
EtherCAT State: Safe-Operational (0)
EtherCAT State: Operational (0)
EtherCAT Configuration (0):
GRT1 : 0 : 1 : 1001 (0:0/32:8/0:2/0:0)
R88D-KN01H : 1 : 10 : 10 (9)
This system contains one GRT1-ECT at node address 1001, with 8 digital outputs (32 to 39) and 2 analog inputs (0 and 1) and one G5-ECT Servo drive at node address 10 and axis 9.

ETHERCAT($66, unit_number, address, VR_start_RxPDO, VR_length_RxPDO, VR_start_TxPDO, VR_length_TxPDO)

- **function $66**
  Function to configure the mapping between FZM1 or FQ-M Vision sensors and TJ2-MC__
- **unit_number**
  Unit number of the EtherCAT master to which the slave is attached.
- **address**
  Configured address of the EtherCAT slave
- **VR_start_RxPDO**
  The starting address in VR memory of the controller where the data to the device (RxPDO) is mapped (default = 0)
- **VR_length_RxPDO**
  The number of VR locations to allocate data to the device (RxPDO) (one object per VR, default = 0)
- **VR_start_TxPDO**
  The starting address in VR memory of the controller where the data from the device (TxPDO) is mapped (default = 0)
- **VR_length_TxPDO**
  The number of VR locations to allocate data from the device (TxPDO) (one object per VR, default = 0)

Example

The following example maps the FZM1 (address 1001) Command area to VR locations 100 to 104 and the Response and Output area to VR locations 200 to 211 and checks if the command was successful.

```
IF ETHERCAT($66,0,1001,100,5,200,12) THEN
   PRINT "Mapping: OK"
ELSE
   PRINT "Mapping: FAIL"
ENDIF
```

See also

N/A

3.2.130 ETHERNET

Type	System command
Syntax	**ETHERNET(function, unit_number, parameter [,values])**
Description	The command **ETHERNET** is used to read and set certain functions of Ethernet communications. The **ETHERNET** command should be entered on the command line of the terminal window of Trajexia Studio in disconnected mode. Note: The commands with parameters 4,5,7,9,10 and 12 take effect immediately after execution. The commands with parameters 0,2,3 and 8 require a power cycle to Trajexia to enable the new parameters.
Arguments	• **function** 0 = Read, 1 = Write. • **unit_number** -1. • **parameter** 0 = IP Address 2 = Subnet Mask 3 = MAC address 4 = Default Port Number (initialised to 23) 5 = Token Port Number (initialised to 3240, used by Trajexia Studio) 7 = ModbusTCP mode: Integer (0) or IEEE floating point (1) 8 = Default Gateway 9 = Data configuration: VR variables (0) or TABLE (1) 10 = ModbusTCP Port Number (initialised to 502) 11 = ARP cache (read-only). 12 = Default FINS Port Number (initialised to 9600), see also section 4.2.2. • **values** The required parameter for a write.
Example	**ETHERNET(1,-1,0,192,200,185,2)** Set the Trajexia IP address to 192.200.185.2.
See also	N/A

3.2.131 EX

Type	System command
Syntax	**EX[(option)]**
Description	Resets the controller as if it were being powered up again. There are two types of reset performed by the **EX** command. **EX** without the argument, or **EX(0)** does the software reset of the controller. **EX(1)** does the hardware reset of the controller, also resetting the communication interface. This e.g. is necessary to make a changed IP address effective.
Arguments	N/A
Example	No example.
See also	N/A

3.2.132 EXP

Type	Mathematical function
Syntax	**EXP(expression)**
Description	The **EXP** function returns the exponential value of the expression.
Arguments	• **expression** Any valid BASIC expression.
Example	**>>PRINT EXP(1.0)** **2.7183**
See also	N/A

3.2.133 FALSE

Type	Constant (read-only)
Syntax	**FALSE**
Description	The **FALSE** constant returns the numerical value 0.
Arguments	N/A

Example	**test:**
	res = IN(0) OR IN(2)
	IF res = FALSE THEN
	PRINT "Inputs are off"
	ENDIF

See also	N/A

3.2.134 FAST_JOG

Type	Axis parameter
Syntax	**FAST_JOG**
Description	The **FAST_JOG** axis parameter contains the input number to be used as the fast jog input. The number can be from 0 to 31. As default the parameter is set to -1, no input is used for the fast jog. The fast jog input controls the jog speed between two speeds. If the fast jog input is set, the speed as given by the **SPEED** axis parameter will be used for jogging. If the input is not set, the speed given by the **JOGSPEED** axis parameter will be used. Note: This input is active low.
Arguments	N/A
Example	No example.
See also	**AXIS**, **FWD_JOG**, **JOGSPEED**, **REV_JOG**, **SPEED**.

3.2.135 FASTDEC

Type	Axis parameter
Syntax	**FASTDEC**
Description	The **FASTDEC** axis parameter contains fast deceleration ration. Its default value is zero. If a non-zero **FASTDEC** is specified, the axis will ramp to zero at this deceleration rate when an axis limit switch or position is reached.
Arguments	N/A
Example	No example.
See also	N/A

3.2.136 FE

Type	Axis parameter (read-only)
Syntax	**FE**
Description	The **FE** axis parameter contains the position error in user units. This is calculated by the demand position (**DPOS** axis parameter) minus the measured position (**MPOS** axis parameter). The value of the Following Error can be checked by using the axis parameters **FE_LIMIT** and **FE_RANGE**.
Arguments	N/A
Example	No example.
See also	**AXIS**, **DPOS**, **FE_LIMIT**, **FE_RANGE**, **MPOS**, **UNIT_INIT**.

3.2.137 FE_LATCH

Type	Axis parameter (read-only)
Syntax	**FE_LATCH**
Description	Contains the initial **FE** value which caused the axis to put the controller into MOTION_ERROR. This value is only set when the **FE** exceeds the **FE_LIMIT** and the **SERVO** parameter has been set to OFF. **FE_LATCH** is reset to 0 when the **SERVO** parameter of the axis is set back to ON.
Arguments	N/A
Example	No example.
See also	N/A

3.2.138 FE_LIMIT

Type	Axis parameter
Syntax	**FE_LIMIT** **FELIMIT**
Description	The **FE_LIMIT** axis parameter contains the maximum allowed Following Error in user units. When exceeded, bit 8 of the **AXISSTATUS** parameter of the axis will be set. If the **ERRORMASK** parameter has been properly set, a motion error will be generated and WDOG enable relay will be reset to 0. This limit is used to guard against fault conditions, such as mechanical lock-up, loss of encoder feedback, etc.
Arguments	N/A
Example	No example.
See also	**AXIS**, **AXIS_FS_LIMIT**, **ERRORMASK**, **FE**, **FE_RANGE**, **UNIT_INIT**.

3.2.139 FE_LIMIT_MODE

Type	Axis parameter
Syntax	**FE_LIMIT_MODE=value**
Description	When this parameter is set to 0, the axis will cause a **MOTION_ERROR** immediately when the **FE** exceeds the **FE_LIMIT** value. If **FE_LIMIT_MODE** is set to 1, the axis will only generate a **MOTION_ERROR** when the **FE** exceeds **FE_LIMIT** during 2 consecutive servo periods. This means that if **FE_LIMIT** is exceeded for one servo period only, it will be ignored. The default value for **FE_LIMIT_MODE** is 0.
Arguments	N/A
Example	No example.
See also	N/A

3.2.140 FE_RANGE

Type	Axis parameter
Syntax	**FE_RANGE**
Description	The **FE_RANGE** axis parameter contains the limit for the Following Error warning range in user units. When the Following Error exceeds this value on a servo axis, bit 1 in the **AXISSTATUS** axis parameter will be turned on. This range is used as a first indication for fault conditions in the application (compare **FE_LIMIT**).
Arguments	N/A
Example	No example.
See also	**AXIS**, **AXIS_FS_LIMIT**, **ERRORMASK**, **FE**, **UNIT_INIT**.

3.2.141 FHOLD_IN

Type	Axis parameter
Syntax	**FHOLD_IN** **FH_IN**
Description	The **FHOLD_IN** axis parameter contains the input number to be used as the feedhold input. The valid input range is 0 to 31. Values 0 to 15 represent physically present inputs of TJ2-MC__ I/O connector and are common for all axes. Values 16 to 31 are mapped directly to Drive inputs that are present on the CN1 connector. They are unique for each axis. It depends on the type of Servo Drive which Servo Drive inputs are mapped into inputs 16 to 31. As default the parameter is set to -1, no input is used for feedhold. Note: This input is active low. If an input number is set and the feedhold input turns set, the speed of the move on the axis is changed to the value set in the **FHSPEED** axis parameter. The current move is not cancelled. Furthermore, bit 7 of the **AXISSTATUS** parameter is set. When the input turns reset again, any move in progress when the input was set will return to the programmed speed. Note: This feature only works on speed controlled moves. Moves which are not speed controlled (**CAMBOX**, **CONNECT** and **MOVELINK**) are not affected.
Arguments	N/A
Example	No example.
See also	**AXIS**, **AXIS_FS_LIMIT**, **FHSPEED**, **UNIT_INIT**.

3.2.142 FHSPEED

Type	Axis parameter
Syntax	**FHSPEED**
Description	The **FHSPEED** axis parameter contains the feedhold speed. This parameter can be set to a value in user units/s and defines at which speed the axis will move when the feedhold input turns on. The current move is not cancelled. **FHSPEED** can have any positive value including 0. The default value is 0. This default value is applicable to most applications as motion is usually ramped down to zero speed when the freehold input is set. In some cases it may be desirable for the axis to ramp to a known constant speed when the freehold input is set. Note: This feature only works on speed controlled moves. Moves which are not speed controlled (**CAMBOX**, **CONNECT** and **MOVELINK**) are not affected.
Arguments	N/A
Example	No example.
See also	**AXIS**, **AXIS_FS_LIMIT**, **FHOLD_IN**, **UNIT_INIT**.

3.2.143 FINS_COMMS

Type: Communication command

Syntax: **FINS_COMMS(type, network, node, unit, remote_area, remote_offset, length, local_area, local_offset, timeout [, ip1, ip2, ip3, ip4])**

Description: FINS (Factory Interface Network Service) is a Proprietary OMRON communication protocol. A subset of this protocol has been implemented in Trajexia. The FINS protocol has been implemented with the intention of enabling seamless communication with other OMRON devices (PLCs, HMIs, etc.) and software (CX-Drive, CX-Server, etc.). For more information on FINS communication protocol, see section 4.2.3 and the Communication Commands Reference Manual, cat. num. W342-E1, Sections 3 and 5.
Trajexia has built in FINS client capabilities, so it can initiate the FINS communications with FINS slave devices using **FINS_COMMS**. Only FINS 0101 (Read Memory) and FINS 0102 (Write Memory) commands are implemented at the moment of this writing. With FINS 0101, memory can be read from other devices with FINS server capability. FINS 0102 can be used to write data to devices with FINS server capability.
This command returns one of the following values, depending on outcome of the execution:
-1: The command executed successfully.
0: The command failed.
1: Request not sent because the client or the FINS protocol is busy.
2: One or more of the request parameters are invalid.
3: Invalid source memory area.
4: Request was sent, but no response from remote server received within timeout period.
5: Error response code received from remote server.

Arguments:

- **type**
  The type of the FINS command. 0 means FINS 0101, read memory from remote FINS server. 1 means FINS 0102, write memory to the remote server.
- **network**
  The destination network. For more details, see the Communication Commands Reference Manual, cat. num. W342-E1, Section 3.
- **node**
  The node of the destination FINS server. For more details, see the Communication Commands Reference Manual, cat. num. W342-E1, Section 3.
- **unit**
  The unit number of the destination FINS server. For more details, see the Communication Commands Reference Manual, cat. num. W342-E1, Section 3.
- **remote_area**
  The area of memory accessed on the destination FINS server. Range: 128..255. Note that this area must be one of the following values if the destination is another Trajexia system: 0xB0: Integer VR value; 0xF0: float VR value; 0x82: Integer TABLE value; 0xC2: float TABLE value.
- **remote_offset**
  The memory offset on the destination FINS server. Range: 0..65535. Note that this range will be more limited to the maximum TABLE or VR addresses if the destination is another Trajexia system.
- **length**
  The number of items to be transferred. The range will depend upon the FINS frame length and the capabilities of the client and remote servers. The range for a Trajexia system is from 1 to 700 integer values, or 1 to 350 floating point values.
- **local_area**
  The local (source) memory area. Note that this area must be one of the following values: 0x00: Integer VR value; 0x01: Integer TABLE value; 0x02 : float TABLE value.

- **local_offset**
  The offset of the first value in the local (source) memory area. The range depends upon the VR or TABLE array size and value for the length argument.
- **timeout**
  The number of milliseconds to wait for a response from the destination FINS server, before timing out.
- **IP1, IP2, IP3, IP4**
  Optional parameters that define the remote (destination) server IP address. These arguments must be used if both the Trajexia system and the destination FINS server do not belong to same network.

Example

A Trajexia system and an OMRON CJ1 PLC with Ethernet Unit CJ1W-ETN11 system are connected to the same network. The IP address of Trajexia system is 192.168.0.5. The IP address of the PLC Ethernet Unit is 192.168.0.12.
When you execute the command
FINS_COMMS(0,0,12,0,$82, 1000,20,0,500,5000,192,168,0,12)
20 words (**length=20**) of DM PLC memory area (**remote_area=$82**) is read, starting from DM1000 (**remote_offset=1000**), and is written in the Trajexia VR memory in integer format (**local_area=0**), starting from VR(500) (**local_offset=500**). So, values in PLC memory range DM1000 to DM1019 are placed in Trajexia memory VR(500) to VR(519). The timeout is set to 5 seconds.
When you execute the command
FINS_COMMS(1,0,12,0,$80, 50,10,0,300,3000,192,168,0,12)
10 words (**length=10**) of Trajexia VR memory as integers (**local_area=0**), starting from VR(300) (**local_offset=300**), are written to the CIO area of the PLC (**remote_area=$80**), starting from CIO50 (**remote_offset=50**). So, values in Trajexia memory range VR(300) to VR(309) are placed in memory CIO50 to CIO59 of the PLC. The timeout is set to 3 seconds.

See also

N/A

3.2.144 FLASHVR

Type

System function

Syntax

FLASHVR(function)

Description

Copies user data in RAM to and from the permanent Flash memory.

Arguments

- **function**
  Specifies the required action.
  -1 = Stores the entire **TABLE** to the Flash-ROM and use it to replace the RAM table data on power-up.
  -2 = Stop using the Flash-ROM copy of **TABLE** during power-up.

Example

Save the entire TABLE data to Flash memory.
FLASHVR(-1)

See also

N/A

3.2.145 FOR..TO..STEP..NEXT

Type

Program control command

Syntax

FOR variable = start TO end [STEP increment]
commands
NEXT variable

Description

The **FOR ... NEXT** loop allows the program segment between the **FOR** and the **NEXT** statement to be repeated a number of times.
On entering this loop, the variable is initialized to the value of start and the block of commands is then executed. Upon reaching the **NEXT** command, the variable is increased by the increment specified after **STEP**. The **STEP** value can be positive or negative, if omitted the value is assumed to be 1.
While variable is less than or equal to end, the block of commands is repeatedly executed until variable is greater than end, at which time program execution will continue after **NEXT**.
Note: **FOR ... NEXT** statements can be nested up to 8 levels deep in a BASIC program.

Arguments
- **variable**
  Any valid BASIC expression.
- **start**
  Any valid BASIC expression.
- **end**
  Any valid BASIC expression.
- **increment**
  Any valid BASIC expression.
- **commands**
  One or more BASIC commands.

Example
```
FOR opnum = 8 TO 13
  OP(opnum,ON)
NEXT opnum
```
This loop turns on outputs 8 to 13.

Example
```
loop:
  FOR dist = 5 TO -5 STEP -0.25
    MOVEABS(dist)
    GOSUB pick_up
  NEXT dist
```
The **STEP** increment can be positive or negative.

Example
```
loop1:
  FOR I1 = 1 TO 8
  loop2:
    FOR I2 = 1 TO 6
      MOVEABS(I1*100,I2*100)
      GOSUB 1000
    NEXT I2
  NEXT I1
```
FOR..TO..STEP..NEXT statements can be nested (up to 8 levels deep) provided the inner **FOR** and **NEXT** commands are both within the outer **FOR..TO..STEP..NEXT** loop.

See also **REPEAT..UNTIL**, **WHILE..WEND**.

3.2.146 FORCE_SPEED

Type Axis parameter

Syntax **FORCE_SPEED = value**

Description The **FORCE_SPEED** parameter is used to directly control the speed when forced speed moves (**MOVESP**, **MOVEABSSP**, **MOVECIRCSP**,) are loaded. The **FORCE_SPEED** parameter should be set to the required value at the time of loading the move into the buffer.
If two forced speed move types are merged, the speed at the merge point is controlled by the **ENDMOVE_SPEED** of the outgoing move. If a forced speed move follows one or more non-forced speed moves the deceleration will occur to the **FORCE_SPEED** of the incoming move.

Arguments N/A

Example **FORCE_SPEED=2000**

See also **MOVESP**, **ENDMOVE_SPEED**

3.2.147 FORWARD

Type Axis command

Syntax **FORWARD**
FO

Description The **FORWARD** command moves an axis continuously forward at the speed set in the **SPEED** axis parameter. The acceleration rate is defined by the **ACCEL** axis parameter.
FORWARD works on the default basis axis (set with **BASE**) unless **AXIS** is used to specify a temporary base axis.
Note: The forward motion can be stopped by executing the **CANCEL** or **RAPIDSTOP** command, or by reaching the forward limit. If stopped by execution of the **CANCEL** or **RAPIDSTOP** command, the axis decelerates to a stop at the programmed DECEL rate.

Arguments N/A

Example Move an axis forward until it hits the end limit switch, then move it in the reverse direction for 25 cm.

```
BASE(3)
FWD_IN=7  limit switch connected to input 7
FORWARD
WAIT IDLE ' wait for motion to stop on the switch
MOVE(-25.0)
WAIT IDLE
```

fig. 29

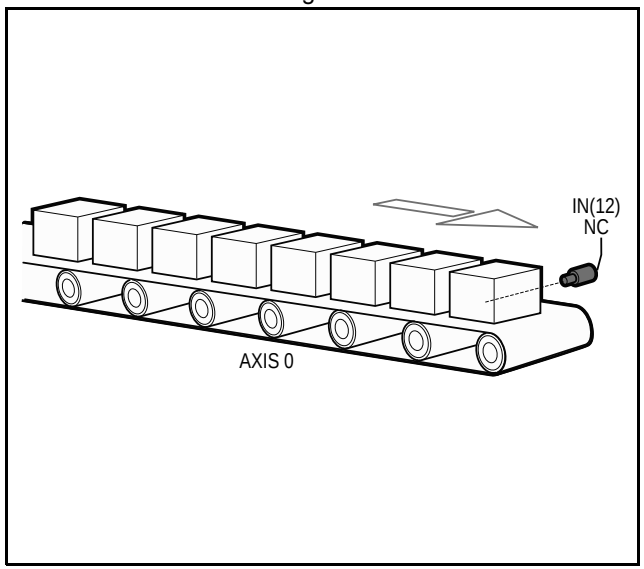

Example A machine that applies lids to cartons uses a simulated line shaft. This example sets up a virtual axis running forward to simulate the line shaft. Axis 0 is then connected, with the **CONNECT** command, to this virtual axis to run the conveyor. Axis 1 controls a vacuum roller that feeds the lids on to the cartons using the **MOVELINK** control.

```
BASE(4)
ATYPE=0 'Set axis 4 to virtual axis
REP_OPTION=1
SERVO=ON
FORWARD 'starts line shaft
BASE(0)
CONNECT(-1,4) 'Connects base 0 to virtual axis in reverse
WHILE IN(2)=ON
  BASE(1)
  'Links axis 1 to the shaft in reverse direction
  MOVELINK(-4000,2000,0,0,4,2,1000)
  WAIT IDLE
WEND
RAPIDSTOP
```

fig. 30

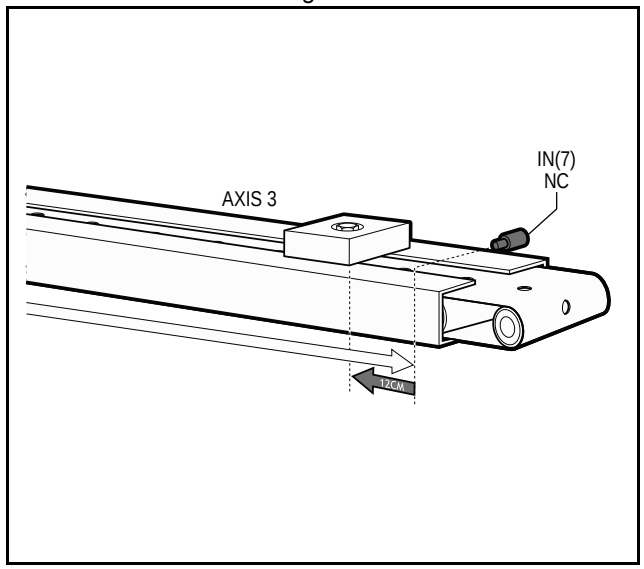

See also **AXIS**, **CANCEL**, **RAPIDSTOP**, **REVERSE**, **UNIT_INIT**.

3.2.148 FPGA_VERSION

Type Slot parameter

Syntax **FPGA_VERSION SLOT(unit_number)**

Description This parameter returns the FPGA version of the unit with unit_number in a controller system.

Arguments
- **unit_number**
  Unit numbers are -1 to 6, including 0, with -1 being the TJ2-MC__ and 0 being the unit immediately to the right of the TJ2-MC__.

Example N/A

See also N/A

3.2.149 FRAC

Type Mathematical function

Syntax **FRAC(expression)**

Description The **FRAC** function returns the fractional part of the expression.

Arguments
- **expression**
  Any valid BASIC expression.

Example
```
>> PRINT FRAC(1.234)
0.2340
```

See also N/A

3.2.150 FRAME

Type System parameter

Syntax **FRAME**

Description A **FRAME** is a transformation which enables the user to program in X,Y,Z Cartesian coordinates when the machine or robot does not have a direct or one-to-one mechanical connection to this coordinate system.
The **FRAME** command selects which transformation to use on axes in a **FRAME_GROUP**. Applying a **FRAME** to an axis in a **FRAME_GROUP** will apply that frame to all the axes in the group. To make this compatible with older firmware, if no **FRAME_GROUPS** have been configured then a default group is generated using the lowest axes, regardless of what axis the **FRAME** parameter was issued on.
Most transformations require configuration data to specify the lengths of mechanical links or operating modes. This is stored in the table with offsets detailed below in the parameters list. These table positions are offset by the 'table_offset' parameter in **FRAME_GROUP**. For a default **FRAME_GROUP** table_offset is 0.

Axis scaling
When a **FRAME** is enabled **UNITS** applies the scaling to the world (Cartesian) coordinate system and **AXIS_UNITS** applies scaling to the axis coordinate system.

Warning:
When frame is enabled **MPOS** is scaled by **AXIS_UNITS**, when frame is disabled **MPOS** is scaled by **UNITS**.
Position and following errors
When a **FRAME** is active **MPOS** is the motor position and **DPOS** is in the world coordinate system. **AXIS_DPOS** can be read to find the demand position in the motor coordinate system.
The following error is calculated between MPOS and AXIS_DPOS and so is the following error of the motor.

Hardware and Software limits
As **FS_LIMIT** and **RS_LIMIT** use **DPOS** they are both active in the world coordinate system. **VOLUME_LIMIT** also uses **DPOS** so is also in the world coordinate system. **FWD_IN** and **REV_IN**, **AXIS_FS_LIMIT** and **AXIS_RS_LIMIT** use **AXIS_DPOS** as so act on the forward and reverse limit of the motor.

Note:
When moving off **FWD_IN** and **AXIS_FS_LIMIT** the motor must move in a reverse direction. Due to the **FRAME** transformation this may not be a reverse movement in the **FRAME** coordinates. When moving off a **REV_IN** and **AXIS_RS_LIMIT** the motor must move in a forward direction. Due to the **FRAME** transformation this may not be a forward movement in the **FRAME** coordinates.

Power on sequence and Homing
Most **FRAME** transformations require the machine to be homed and/ or moved to a position before the **FRAME** is enabled. This can be done using standard **DATUM** commands.
When a **FRAME** is enabled **DPOS** is adjusted to the world coordinates which are calculated from the current **MPOS**.

Tip:
When using multiple frames or if you wish to group your axis you can use **DISABLE_GROUP** so that a **MOTION_ERROR** on one axis does not affect all.

Offsetting positions
When a **FRAME** is enabled **OFFPOS** and **DEFPOS** must not be used. You can use **USER_FRAME** to define a different origin to program from.

System with FRAME=0

fig. 31

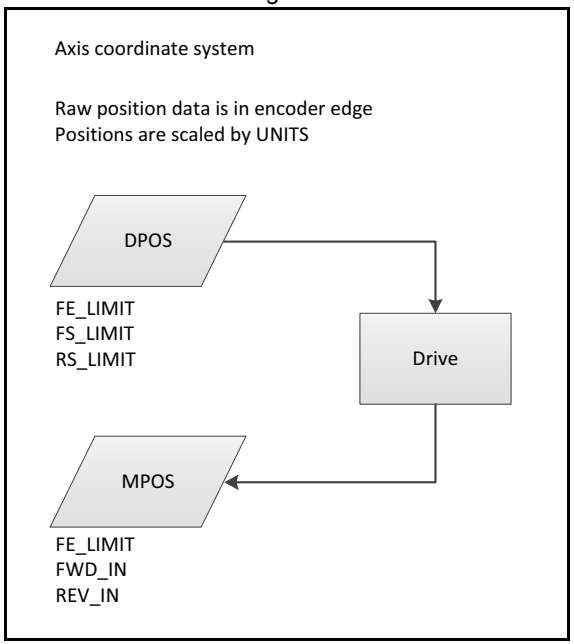

System with FRAME<>0

fig. 32

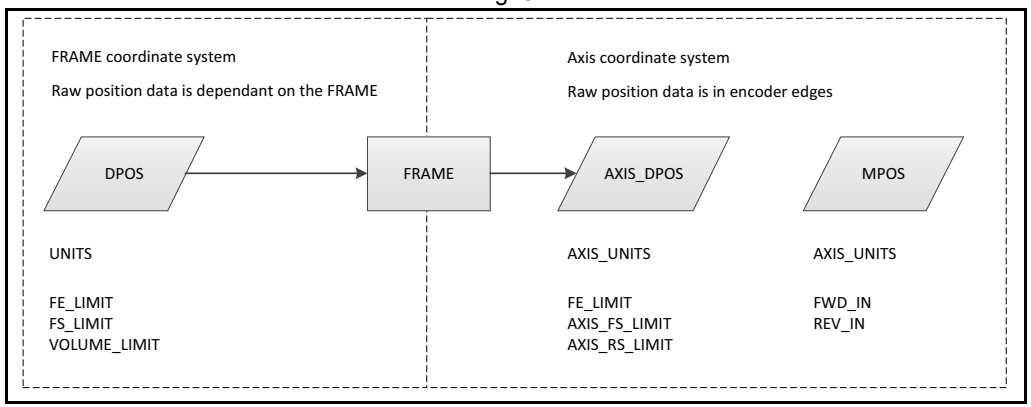

Arguments

- **value**
  0 = No transform
  1 = 2 axis SCARA robot
  2 = XY single belt
  3 = Double XY single belt
  4 = 2 axis pick and place
  5 = 2x2 Matrix transform
  6 = Polar to Cartesian transformation
  10 = Cartesian to polar transformation
  13 = Dual arm robot transformation
  14 = 3 arm delta robot.

FRAME 14

FRAME=14 enables the transformation for a 3 arm ‘delta’ or ‘parallel’ robot. It transforms 3 axes from the mechanical configuration to Cartesian coordinates using the right hand rule.
Once the frame is enabled the raw position data (**UNITS**=1) is measured in Micrometres, **UNITS** can then be set to a convenient scale. The origin for the robot is the centre of the top plate with the X direction following the first axis. This can be adjusted using the rotation parameter.

Homing
Before enabling **FRAME**=14 the position must be defined so that when the upper arms are horizontal the axis position is 0. You do not need to start in this position, just ensure that it has been defined.

fig. 33

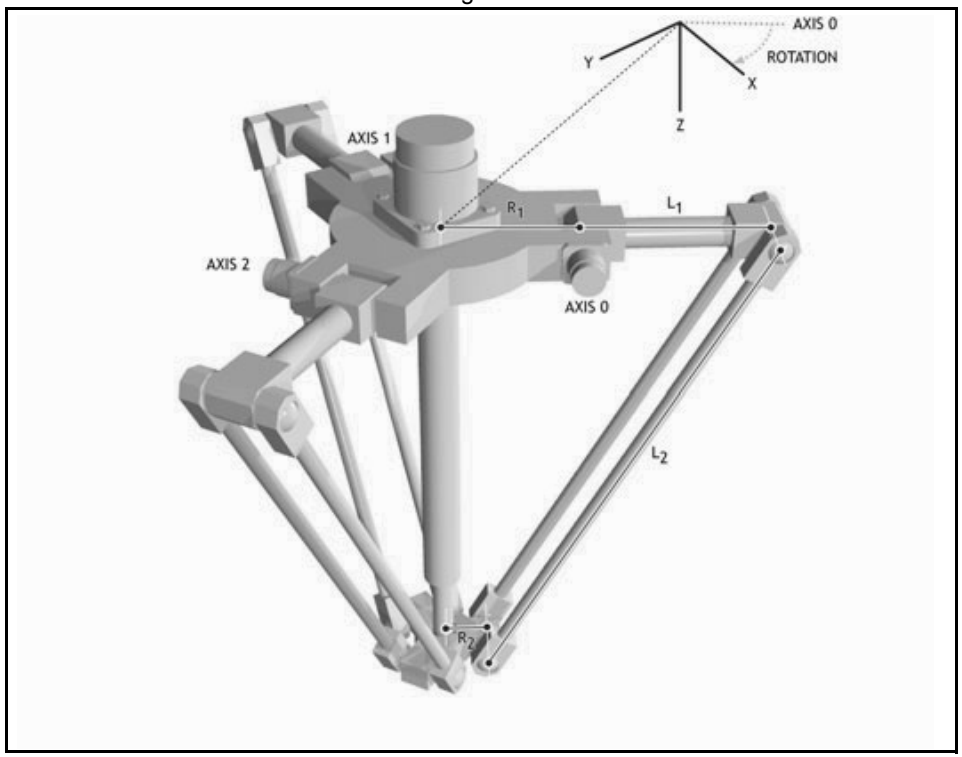

Arguments

- **value**
  0 = No transform
  14 = 3 arm delta robot.

The Table data defines the mechanical configuration of the robot, the values in brackets refer to the labels in the above diagram.

- **Table data**
  0 = Top radius to joint in Micrometers (R1)
  1 = Wrist radius to joint in Micrometers (R2)
  2 = Upper arm length in Micrometers (L1)
  3 = Lower arm length in Micrometers (L2)
  4 = Edges per radian
  5 = Angle of rotation in radians (Rotation)

Example Start-up sequence for a 3 arm delta robot using the default FRAME_GROUP. Homing is completed using a sensor that detects when the upper arms are level.

```
''''''
```

Arguments

- **group**
  The group number, 0-7. When used as the only parameter **FRAME_GROUP** prints the **FRAME_GROUP**, the active **USER_FRAME** and **TOOL_OFFSET** information to the currently selected output channel (default channel 0)
- **table_offset**
  -1 = Delete group data
  0+ = The start position in the table to store the **FRAME** configuration.
- **axis0**
  The first axis in the group
- **axis1**
  The second axis in the group
- **axis n**
  The last axis in the group

Example

Configure a FRAME_GROUP for axes 1,2 and 5 using table offset 100.

```
'Initialise the FRAME_GROUP
FRAME_GROUP(0,100, 1,2,5)
'Configure the axes, FRAME table data and home the robot
GOSUB configure_frame
'PRINT the FRAME_GROUP information to the command line
FRAME_GROUP(0)
'Enable the frame
FRAME AXIS(1)=14
```

See also

FRAME, **USER_FRAME**

3.2.152 FRAME_TRANS

Type Mathematical Function

Syntax **FRAME_TRANS(frame, table_in, table_out, direction [,table_offset])**

Description This function enables you to perform both the forward and inverse transformation calculations of a **FRAME**. One particular use is to check following errors in user units or to calculate positions outside of the **FRAME** working area.

Tip:

The **FRAME** calculations are performed on raw position data. When using a **FRAME** typically the raw position data for **DPOS** is micrometers and the raw position data for **MPOS** is encoder counts but this can vary depending on which **FRAME** is selected.

fig. 34

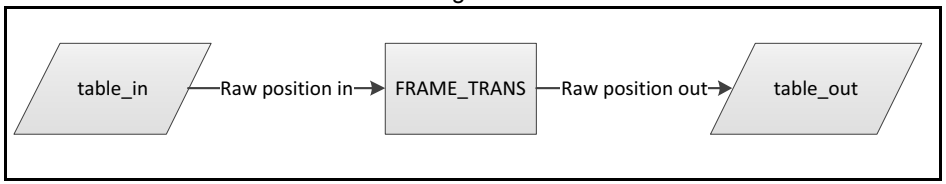

Arguments

- **frame**
  The **FRAME** number to run
- **table_in**
  The start position in the **TABLE** of the input positions
- **table_out**
  The start position in the **TABLE** of the generated positions
- **direction**
  1 = **AXIS_DPOS** to **DPOS** (Forward Kinematics)
  0 = **DPOS** to **AXIS_DPOS** (Inverse Kinematics)
- **table_offset**
  The first position in the table where the frame configuration is found (default 0)

Example 1 Using **MPOS** calculate the Cartesian values so you can compare them to **DPOS**. This can be used to check the following error in the world coordinate system. The frame configuration is stored in the table starting at position 100.

```
'Load positions into the table
FOR x=0 TO 3
   BASE(x)
   TABLE(1000+x,MPOS AXIS(x)*UNITS AXIS(x))
NEXT x
'Calculate forward transform to see MPOS is Cartesian coordinates
FRAME_TRANS(15, 1000,2000,1,100)

TABLE(3000, TABLE(2000)/ UNITS AXIS(0))
TABLE(3001, TABLE(2001)/ UNITS AXIS(1))
TABLE(3002, TABLE(2002)/ UNITS AXIS(2))
PRINT "DPOS IN ENCODER
COUNTS",TABLE(2000),TABLE(2001),TABLE(2002)
PRINT "DPOS IN MM",TABLE(3000),TABLE(3001),TABLE(3002)
PRINT "FE in world x = ", TABLE(3000) – DPOS AXIS(0)
PRINT "FE in world y = ", TABLE(3001) – DPOS AXIS(1)
PRINT "FE in world z = ", TABLE(3002) – DPOS AXIS(2)
```

fig. 35

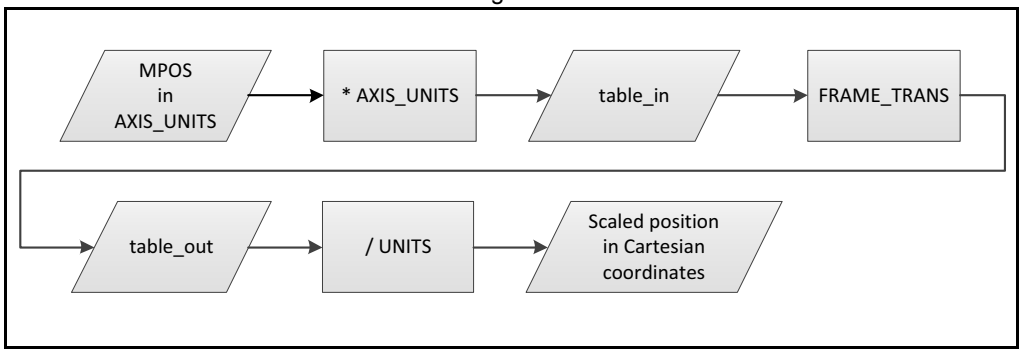

Example 2 Use the inverse kinematics to confirm that a demand position will result in an axis position that the motors can achieve.

```
'Load positions into the table
TABLE(5000,100*UNITS AXIS(0),200*UNITS AXIS(1),400*UNITS AXIS(2))
'Calculate reverse transform to see
FRAME_TRANS(14, 5000,6000,0)
'Divide the result by the AXIS_UNITS to get
'the MPOS in degrees
TABLE(7000, TABLE(6000)/ AXIS_UNITS)
TABLE(7001, TABLE(6001)/ AXIS_UNITS)
TABLE(7002, TABLE(6002)/ AXIS_UNITS)
PRINT "MPOS RAW ENCODER COUNTS",
TABLE(6000),TABLE(6001),TABLE(6002)
PRINT "MPOS degrees", TABLE(7000),TABLE(7001),TABLE(7002)
WEND
```

fig. 36

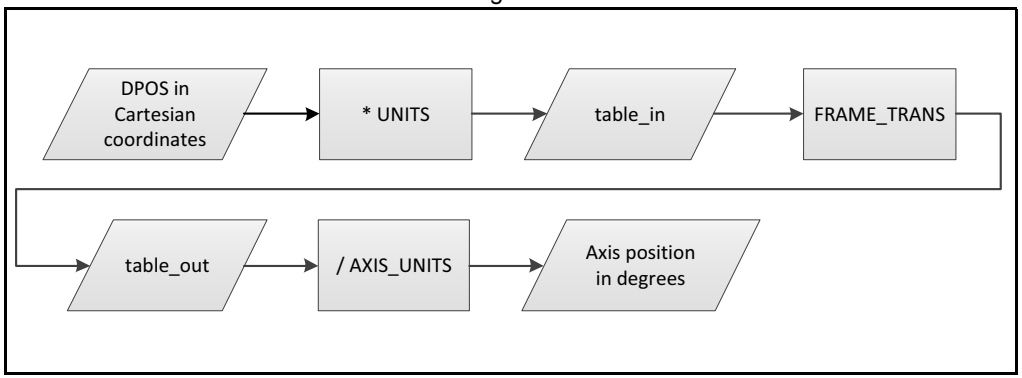

See also **FRAME**

3.2.153 FREE

Type System function

Syntax **FREE**

Description The **FREE** function returns the remaining amount of memory available for user programs.
Note: Each line takes a minimum of 4 characters (bytes) in memory. This is for the length of this line, the length of the previous line, number of spaces at the beginning of the line and a single command token. Additional commands need one byte per token; most other data is held as ASCII.
The TJ2-MC__ compiles programs before they are executed, this means that a little under twice the memory is required to be able to execute a program.

Arguments N/A

Example

```
>> PRINT FREE
47104.0000
```

See also **DIR**

3.2.154 FS_LIMIT

Type	Axis parameter
Syntax	**FS_LIMIT** **FSLIMIT**
Description	The **FS_LIMIT** axis parameter contains the absolute position of the forward software limit in user units. A software limit for forward movement can be set from the program to control the working range of the machine. When the limit is reached, the TJ2-MC__ will ramp down the speed of an axis to 0, and then cancel the move. Bit 9 of the **AXISSTATUS** axis parameter will be turned on while the axis position is greater than **FS_LIMIT**. **FS_LIMIT** is disabled when it has a value greater than **REP_DIST**.
Arguments	N/A
Example	No example.
See also	**AXIS**, **AXIS_FS_LIMIT**, **REP_DIST**, **UNIT_INIT**.

3.2.155 FULL_SP_RADIUS

Type	Axis parameter
Syntax	**FULL_SP_RADIUS**
Description	This sets the full speed radius in user **UNITS** for fixed speed moves when function is enabled with **CORNER_MODE**. Once enabled the controller will use the full programmed **FORCE_SPEED** value for radii above the value of **FULL_SP_RADIUS**. Where the radius is below the value of **FULL_SP_RADIUS** the controller will proportionally reduce the speed.
Arguments	N/A

Example

In the following program, when the first two **MOVECIRCSP** is reached the speed remains at 1000 because the radius (60) is greater than that set in **FULL_SP_RADIUS**. The speeds of the following circular moves are reduced to 60% (40/60), 30% (20/60) and 15% (20/60) because the radius is proportionally lower than that stored in **FULL_SP_RADIUS**.

```
BASE(0)
CORNER_MODE=8 'Enable use of FULL_SP_RADIUS (bit 3 ON)
FULL_SP_RADIUS=60
MERGE=ON
FORCE_SPEED=1000
ENDMOVE_SPEED=1000
MOVECIRCSP(150,0,75,0,1)
MOVECIRCSP(120,0,60,0,0)
MOVECIRCSP(80,0,40,0,1)
MOVECIRCSP(40,0,20,0,0)
MOVECIRCSP(20,0,10,0,1)
```

fig. 37

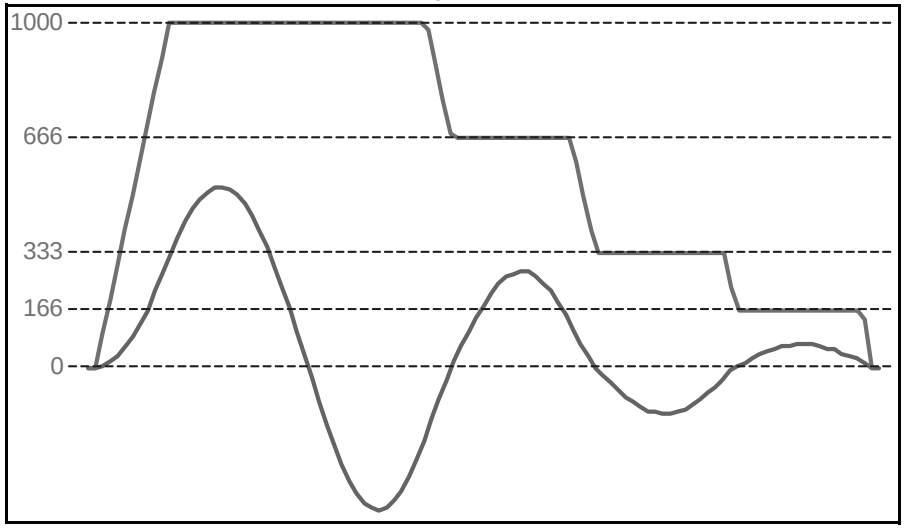

See also **CORNER_MODE**, **MOVECIRCSP**, **FORCE_SPEED**

3.2.156 FWD_IN

Type: Axis parameter

Syntax: **FWD_IN**

Description: The **FWD_IN** axis parameter contains the input number to be used as a forward limit input. The valid input range is 0 to 31. Values 0 to 15 represent physically present inputs of TJ2-MC__ I/O connector and are common for all axes.
Values 16 to 31 are mapped directly to Drive inputs that are present on the CN1 connector. They are unique for each axis. It depends on the type of Servo Drive which Servo Drive inputs are mapped into inputs 16 to 31.
As default the parameter is set to -1, no inputs selected.
If an input number is set and the limit is reached, any forward motion on that axis will be stopped. Bit 4 of the **AXISSTATUS** will also be set.
Note: This input is active low.

Arguments: N/A

Example: No example.

See also: **AXIS**, **AXIS_FS_LIMIT**, **REV_IN**.

3.2.157 FWD_JOG

Type: Axis parameter

Syntax: **FWD_JOG**

Description: The **FWD_JOG** axis parameter contains the input number to be used as a jog forward input. The input can be set from 0 to 31. As default the parameter is set to -1, no input is selected.
Note: This input is active low.

Arguments: N/A

Example: No example.

See also: **AXIS**, **FAST_JOG**, **JOGSPEED**, **REV_JOG**.

3.2.158 GET

Type: Communication command

Syntax: **GET [#n,] variable**

Description: The **GET** command assigns the ASCII code of a received character to a variable. If the serial port buffer is empty, program execution will be paused until a character has been received. Channels 5 to 7 are logical channels that are superimposed on the programming port 0 when using Trajexia Studio.
Note: Channel 0 is reserved for the connection to Trajexia Studio and/or the command line interface. Please be aware that this channel may give problems for this function.

Arguments:

- **n**
  The specified input device. When this argument is omitted, the port as specified by **INDEVICE** will be used. See the table below.

Input device number	Description
0	Programming port 0
1	RS-232C serial port 1
2	RS-422A/485 serial port 2
5	Trajexia Studio port 0 user channel 5
6	Trajexia Studio port 0 user channel 6
7	Trajexia Studio port 0 user channel 7

- **variable**
  The name of the variable to receive the ASCII code.

Example: **GET#5, k**
This line stores the ASCII character received on the Trajexia Studio port channel 5 in **k**.

See also: **INDEVICE**, **INPUT**, **KEY**, **LINPUT**

3.2.159 GLOBAL

Type	System command
Syntax	**GLOBAL ["name"[, vr_number]]**
Description	Declares the name as a reference to one of the global VR variables. The name can then be used both within the program containing the **GLOBAL** definition and all other programs in the Trajexia Studio project. Note: The program containing the **GLOBAL** definition must be run before the name is used in other programs. In addition, only that program should be running at the time the **GLOBAL** is executed, otherwise the program error will appear and the program will stop when trying to execute this command. For fast startup the program should also be the only process running at power-up. Using **GLOBAL** with only the name will erase the specified global variable. Using **GLOBAL** with no parameters will erase all **GLOBAL** declarations. This also happens when the TJ2-MC__ is reset by switching the power off and back on, or by executing the **EX** command. In programs that use the defined **GLOBAL**, **name** has the same meaning as **VR(vr_number)**. Do not use the syntax: **VR(name)**. A maximum of 1024 **GLOBAL**s can be declared. The maximum length of the name of the **GLOBAL** is 32 characters.
Arguments	• **name** Any user-defined name containing lower case alpha, numerical or underscore characters. • **vr_number** The number of the VR to be associated with **name**.
Example	**GLOBAL "srew_pitch",12** **GLOBAL "ratio1",534** **ratio1 = 3.56** **screw_pitch = 23.0** **PRINT screw_pitch, ratio1**
See also	**LIST_GLOBAL**

3.2.160 GOSUB..RETURN

Type	Program control command
Syntax	**GOSUB label** **...** **RETURN**
Description	The **GOSUB** structure enables a subroutine jump. **GOSUB** stores the position of the line after the **GOSUB** command and then jumps to the specified label. Upon reaching the **RETURN** statement, program execution is returned to the stored position. Note: Subroutines on each task can be nested up to 8 levels deep.
Arguments	• **label** A valid label that occurs in the program. An invalid label will give a compilation error before execution. Labels can be character strings of any length, but only the first 15 characters are significant. Alternatively line numbers may be used as labels.
Example	**main:** **GOSUB routine** **GOTO main** **routine:** **PRINT "Measured position=";MPOS;CHR(13);** **RETURN**
See also	**GOTO**

3.2.161 GOTO

Type	Program control command
Syntax	**GOTO label**
Description	The **GOTO** structure enables a jump of program execution. **GOTO** jumps program execution to the line of the program containing the label.

Arguments
- **label**
  A valid label that occurs in the program. An invalid label will give a compilation error before execution.
  Labels can be character strings of any length, but only the first 15 characters are significant. Alternatively line numbers may be used as labels.

Example
```
loop:
  PRINT "Measured position = ";MPOS;CHR(13);
  WA(1000)
GOTO loop
```

See also **GOSUB..RETURN**

3.2.162 HALT

Type System command

Syntax **HALT**

Description The **HALT** command stops execution of all program tasks currently running. The command can be used both on Command Line Terminal as in programs. The **STOP** command can be used to stop a single program task.
Note: **HALT** doesn't stop any motion. Currently executing, or buffered moves will continue unless they are terminated with a CANCEL or RAPIDSTOP command.

Arguments N/A

Example No example.

See also **PROCESS**, **STOP**.

3.2.163 HEX

Type System command

Syntax **HEX**

Description This command is used in a print statement to output a number in hexadecimal format.

Arguments N/A

Example **PRINT#5,HEX(IN(8,16))**

See also N/A

3.2.164 HLM_COMMAND

Type Communication command

Syntax **HLM_COMMAND(command, port [, node [, mc_area/mode [, mc_offset]]])**

Description The **HLM_COMMAND** command performs a specific Host link command operation to one or to all Host Link Slaves on the selected port.
Program execution will be paused until the response string has been received or the timeout time has elapsed. The timeout time is specified by using the **HLM_TIMEOUT** parameter. The status of the transfer can be monitored with the **HLM_STATUS** parameter.
Notes:
- When using the **HLM_COMMAND**, be sure to set-up the Host Link Master protocol by using the **SETCOM** command.
- The Host Link Master commands are required to be executed from one program task only to avoid any multi-task timing problems.

Arguments
- **command**
  The selection of the Host Link operation to perform. See the table below.

command value	Description
HLM_MREAD (or value 0)	This performs the Host Link PLC **MODEL READ** (**MM**) command to read the CPU Unit model code. The result is written to the TJ2-MC__ variable specified by **mc_area** and **mc_offset**.
HLM_TEST (or value 1)	This performs the Host Link **TEST** (**TS**) command to check correct communication by sending string "MC__ TEST STRING" and checking the echoed string. Check the **HLM_STATUS** parameter for the result.
HLM_ABORT (or value 2)	This performs the Host Link **ABORT** (**XZ**) command to abort the Host link command that is currently being processed. The **ABORT** command does not receive a response.

command value	Description
HLM_INIT (or value 3)	This performs the Host Link **INITIALIZE** (**) command to initialize the transmission control procedure of all Slave Units.
HLM_STWR (or value 4)	This performs the Host Link **STATUS WRITE** (**SC**) command to change the operating mode of the CPU Unit.

- **port**
  The specified serial port. 1 = RS-232C serial port 1; 2 = RS-422A serial port 2.
- **node** (for **HLM_MREAD**, **HLM_TEST**, **HLM_ABORT** and **HLM_STWR**)
  The Slave node number to send the Host link command to.
  Range: [0, 31].
- **mode** (for **HLM_STWR**)
  The specified CPU Unit operating mode. 0 = PROGRAM mode;
  2 = MONITOR mode; 3 = RUN mode.
- **mc_area** (for **HLM_MREAD**)
  The memory selection of the TJ2-MC__ to read the send data from. See the table below.

mc_area value	Data area
MC_TABLE (or value 8)	TABLE variable array
MC_VR (or value 9)	Global (VR) variable array

- **mc_offset** (for **HLM_MREAD**)
  The address of the specified TJ2-MC__ memory area to read from.
  Range for VR variables: [0, 1023]. Range for TABLE variables:
  [0, 63999].

Example **HLM_COMMAND(HLM_MREAD,1,12,MC_VR,233)**
This command reads the CPU Unit model code of the Host Link Slave with node address 12 connected to the RS-232C port. The result is written to VR(233).
If the connected Slave is a any OMRON CJ/CS PLC model, the VR(233) will contain value 30 (hex) after successful execution.

Example **HLM_COMMAND(HLM_TEST,2,23)**
PRINT HLM_STATUS PORT(2)
This command will check the Host Link communication with the Host Link Slave (node 23) connected to the RS-422A port.
If the **HLM_STATUS** parameter contains value 0, the communication is functional.

Example **HLM_COMMAND(HLM_INIT,2)**
HLM_COMMAND(HLM_ABORT,2,4)
These two commands perform the Host Link **INITIALIZE** and **ABORT** operations on the RS-422A port 2. The Slave has node number 4.

Example **HLM_COMMAND(HLM_STWR,2,0,2)**
When data has to be written to a PC using Host Link, the CPU Unit can not be in RUN mode. The **HLM_COMMAND** command can be used to set it to MONITOR mode. The Slave has node address 0 and is connected to the RS-232C port.

See also **HLM_READ**, **HLM_STATUS**, **HLM_TIMEOUT**, **HLS_NODE**, **HLM_WRITE**, **SETCOM**.

3.2.165 HLM_READ

Type: Communication command

Syntax: **HLM_READ(port, node, plc_area, plc_offset, length, mc_area, mc_offset)**

Description: The **HLM_READ** command reads data from a Host Link Slave by sending a Host link command string containing the specified node of the Slave to the serial port. The received response data will be written to either VR or TABLE variables. Each word of data will be transferred to one variable. The maximum data length is 30 words (single frame transfer).
Program execution will be paused until the response string has been received or the timeout time has elapsed. The timeout time is specified by using the **HLM_TIMEOUT** parameter. The status of the transfer can be monitored with the **HLM_STATUS** parameter.
Notes:
- When using the **HLM_READ**, be sure to set-up the Host Link Master protocol by using the **SETCOM** command.
- The Host Link Master commands are required to be executed from one program task only to avoid any multi-task timing problems.

Arguments:
- **port**
  The specified serial port. 1 = RS-232C serial port 1; 2 = RS-422A serial port 2.
- **node**
  The Slave node number to send the Host link command to. Range: [0, 31].
- **plc_area**
  The PLC memory selection for the Host link command. See the table below.

pc_area value	Data area	Host link command
PLC_DM (or value 0)	DM area	RD
PLC_IR (or value 1)	CIO/IR area	RR
PLC_LR (or value 2)	LR area	RL
PLC_HR (or value 3)	HR area	RH
PLC_AR (or value 4)	AR area	RJ
PLC_EM (or value 6)	EM area	RE

- **plc_offset**
  The address of the specified PC memory area to read from. Range: [0, 9999].
- **length**
  The number of words of data to be transferred. Range: [1, 30].
- **mc_area**
  The memory selection of the TJ2-MC__ to read the send data from. See the table below.

mc_area value	Data area
MC_TABLE (or value 8)	TABLE variable array
MC_VR (or value 9)	Global (VR) variable array

- **mc_offset**
  The address of the specified TJ2-MC__ memory area to write to. Range for VR variables: [0, 63999]. Range for TABLE variables: [0, 499999].

Example: **HLM_READ(2,17,PLC_DM,120,20,MC_TABLE,4000)**
This example shows how to read 20 words from the PLC DM area addresses 120-139 to TJ2-MC__ TABLE addresses 4000-4019. The PC has Slave node address 17 and is connected to the RS-422A port.

See also: **HLM_COMMAND**, **HLM_STATUS**, **HLM_TIMEOUT**, **HLS_NODE**, **HLM_WRITE**, **SETCOM**.

3.2.166 HLM_STATUS

Type: Communication parameter

Syntax: **HLM_STATUS PORT(n)**

Description: The **HLM_STATUS** parameter contains the status of the last Host Link Master command sent to the specified port. The parameter will indicate the status for the **HLM_READ**, **HLM_WRITE** and **HLM_COMMAND** commands. The status bits are defined in the table below.

Bit	Name	Description
0 - 7	End code	The end code can be either the end code which is defined by the Host Link Slave (problem in sent command string) or an end code defined because of a problem found by the Host Link Master (problem in received response string).
8	Timeout error	A timeout error will occur if no response has been received within the timeout time. This indicates communication has been lost.
9	Command not recognized	This status indicates that the Slave did not recognize the command and has returned a IC response.

The **HLM_STATUS** will have value 0 when no problems did occur. In case of a non-0 value, any appropriate action such as a re-try or emergency stop needs to be programmed in the user BASIC program.
Each port has an **HLM_STATUS** parameter. The **PORT** modifier is required to specify the port.

Arguments
- **n**
  The specified serial port. 1 = RS-232C serial port 1; 2 = RS-422A serial port 2

Example
```
>> HLM_WRITE(1,28,PLC_EM,50,25,MC_VR,200)
>> PRINT HEX(HLM_STATUS PORT(1))
1
```
Apparently the CPU Unit is in RUN mode and does not accept the write operation.

Example
```
>> HLM_COMMAND(HLM_TEST,2,0)
>> PRINT HLM_STATUS PORT(2)
256.0000
```
A timeout error has occurred.

See also: **HLM_READ**, **HLM_COMMAND**, **HLM_TIMEOUT**, **HLS_NODE**, **HLM_WRITE**, **SETCOM**.

3.2.167 HLM_TIMEOUT

Type	Communication parameter
Syntax	**HLM_TIMEOUT**
Description	The **HLM_TIMEOUT** parameter specifies the fixed timeout time for the Host Link Master protocol for both serial ports. A timeout error will occur when the time needed to both send the command and receive the response from the Slave is longer than the time specified with this parameter. The parameter applies for the **HLM_READ**, **HLM_WRITE** and **HLM_COMMAND** commands. The **HLM_TIMEOUT** parameter is specified in servo periods.
Arguments	N/A
Example	**>> HLM_TIMEOUT=2000** Consider the servo period of the TJ2-MC__ is set to 1 ms (SERVO_PERIOD=1000). For both serial ports the Host Link Master timeout time has been set to 2 s.
See also	**HLM_READ**, **HLM_COMMAND**, **HLM_STATUS**, **HLS_NODE**, **HLM_WRITE**, **SETCOM**, **SERVO_PERIOD**.

fig. 38

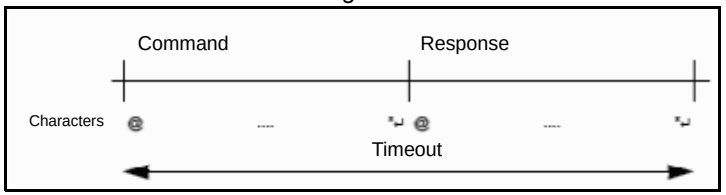

3.2.168 HLM_WRITE

Type: Communication command

Syntax: **HLM_WRITE(port, node, plc_area, plc_offset, length, mc_area, mc_offset)**

Description: The **HLM_WRITE** command writes data from the TJ2-MC__ to a Host Link Slave by sending a Host link command string containing the specified node of the Slave to the serial port. The received response data will be written from either VR or TABLE variables. Each variable will define the word or data that will be transferred. The maximum data length is 29 words (single frame transfer).
Program execution will be paused until the response string has been received or the timeout time has elapsed. The timeout time is specified by using the **HLM_TIMEOUT** parameter. The status of the transfer can be monitored with the **HLM_STATUS** parameter.
Notes:
- When using the **HLM_WRITE**, be sure to set-up the Host Link Master protocol by using the **SETCOM** command.
- The Host Link Master commands are required to be executed from one program task only to avoid any multi-task timing problems.

Arguments
- **port**
  The specified serial port. 1 = RS-232C serial port 1; 2 = RS-422A serial port 2
- **node**
  The Slave node number to send the Host link command to. Range: [0, 31].
- **plc_area**
  The PLC memory selection for the Host link command. See the table below.

pc_area value	Data area	Host link command
PLC_DM (or value 0)	DM area	WD
PLC_IR (or value 1)	CIO/IR area	WR
PLC_LR (or value 2)	LR area	WL
PLC_HR (or value 3)	HR area	WH
PLC_AR (or value 4)	AR area	WJ
PLC_EM (or value 6)	EM area	WE

- **plc_offset**
  The address of the specified PLC memory area to write to. Range: [0, 9999].
- **length**
  The number of words of data to be transferred. Range: [1, 29].
- **mc_area**
  The memory selection of the TJ2-MC__ to read the send data from. See the table below.

mc_area value	Data area
MC_TABLE (or value 8)	Table variable array
MC_VR (or value 9)	Global (VR) variable array

Type: Communication command

- **mc_offset**
  The address of the specified TJ2-MC__ memory area to read from. Range for VR variables: [0, 63999]. Range for TABLE variables: [0, 499999].

Example **HLM_WRITE(1,28,PLC_EM,50,25,MC_VR,200)**
This example shows how to write 25 words from TJ2-MC__ ' s VR addresses 200-224 to the PC EM area addresses 50-74. The PC has Slave node address 28 and is connected to the RS-232C port.

See also **HLM_READ**, **HLM_COMMAND**, **HLM_STATUS**, **HLM_TIMEOUT**, **HLS_NODE**, **SETCOM**.

3.2.169 HLS_NODE

Type Communication parameter

Syntax **HLS_NODE**

Description The **HLS_NODE** parameter defines the Slave unit number for the Host Link Slave protocol. The TJ2-MC__ will only respond as a Host Link Slave to Host Link Master command strings with the unit number as specified in this parameter. The valid range for this parameter is [0, 31]. The default value is 0.

Arguments N/A

Example No example.

See also N/A

3.2.170 HW_PSWITCH

Type I/O command

Syntax **HW_PSWITCH(mode, direction, opstate, table_start, table_end)**

Description The **HW_PSWITCH** command turns on the OUT 0 output for the axis when the predefined axis measured position is reached, and turns the output off when another measured position is reached. Positions are defined as sequence in the TABLE memory in range from **table_start**, to **table_end**, and on execution of the **HW_PSWITCH** command are stored in FIFO queue.
This command is applicable only to Flexible axis axes with **ATYPE** values 43, 44, 45 and 60.
The command can be used with either 1 or 5 parameters. Only 1 parameter is needed to disable the switch or clear FIFO queue. All five parameters are needed to enable switch.
After loading FIFO and going through the sequence of positions in it, if the same sequence has to be executed again, FIFO must be cleared before executing **HW_PSWITCH** command with the same parameters.

Arguments
- **mode**
  0 = disable switch; 1 = on and load FIFO; 2 = clear FIFO.
- **direction**
  0 = decreasing; 1 = increasing.
- **opstate**
  Output state to set in the first position in the FIFO; ON or OFF.
- **table_start**
  Starting TABLE address of the sequence.
- **table_end**
  Ending TABLE address of the sequence.

Example **HW_PSWITCH(1, 1, ON, 21, 50)**
This command will load FIFO with 30 positions, stored in TABLE memory starting from **TABLE(21)** in increasing direction. When the position stored in **TABLE(21)** is reached, the OUT 0 output will be set ON and then alternatively OFF and ON on reaching following positions in the sequence, until the position stored in **TABLE(50)** reached.

Example **HW_PSWITCH(0)**
This command will disable switch if it was enabled previously, but will not clear the FIFO queue.

Example **HW_PSWITCH(2)**
This command will clear FIFO queue if loaded previously.

See also **AXIS**

3.2.171 I_GAIN

Type	Axis parameter
Syntax	**I_GAIN**
Description	The **I_GAIN** parameter contains the integral gain for the axis. The integral output contribution is calculated by multiplying the sums of the Following Errors with the value of the **I_GAIN** parameter. The default value is 0. Adding integral gain to a servo system reduces positioning error when at rest or moving steadily, but it can produce or increase overshooting and oscillation and is therefore only suitable for systems working on constant speed and with slow accelerations. Note: In order to avoid any instability the servo gains should be changed only when the **SERVO** is off. Note: Servo gains have no affect on stepper output axis (ATYPE=46), MECHATROLINK-II position axis (ATYPE=40), EtherCAT position axis (ATYPE=65) or Accurax G5-A/P position axis (ATYPE=80).
Arguments	N/A
Example	No example.
See also	**D_GAIN**, **OV_GAIN**, **P_GAIN**, **VFF_GAIN**.

3.2.172 IDLE

See **WAIT IDLE**.

3.2.173 IEEE_IN

Type	Mathematical function
Syntax	**IEEE_IN(byte0,byte1,byte2,byte3)**
Description	The **IEEE_IN** function returns the floating point number represented by 4 bytes which typically have been received over a communications link, such as ModbusTCP or FINS. Note: byte0 is the high byte of the 32 bit IEEE floating point format.
Arguments	• **byte0** - **byte3** Any combination of 8 bit values that represents a valid IEEE floating point number.
Example	**VR(20) = IEEE_IN(b0,b1,b2,b3)**
See also	N/A

3.2.174 IEEE_OUT

Type	Mathematical function
Syntax	**byte_n = IEEE_OUT(value, n)**
Description	The **IEEE_OUT** function returns a single byte in IEEE format extracted from the floating point value for transmission over a communications link. The function will typically be called 4 times to extract each byte in turn. Note: Byte 0 is the high byte of the 32 bit IEEE floating point format.
Arguments	• **value** Any BASIC floating point variable or parameter. • **n** The byte number (0 - 3) to be extracted.
Example	**a=MPOS AXIS(2)** **byte0 = IEEE_OUT(a, 0)** **byte1 = IEEE_OUT(a, 1)** **byte2 = IEEE_OUT(a, 2)** **byte3 = IEEE_OUT(a, 3)**
See also	N/A

3.2.175 IF..THEN..ELSE..ENDIF

Type: Program control command

Syntax:
IF condition_1 THEN commands {ELSEIF condition_i THEN commands}
[ELSE commands] ENDIF
IF condition_1 THEN commands

Description: This structure controls the flow of the program based on the results of the condition. If the condition is **TRUE** the commands following **THEN** up to **ELSEIF**, **ELSE** or **ENDIF** are executed. If the condition is **FALSE** and the command of a subsequent **ELSEIF** substructure is **TRUE**, the commands of this substructure are executed. If all conditions are **FALSE** the commands following **ELSE** will be executed or the program will resume at the line after **ENDIF** in case no **ELSE** is included. The **ENDIF** is used to mark the end of the conditional block. Note: **IF..THEN..ELSE..ENDIF** sequences can be nested without limit. For a multi-line **IF..THEN** construction, there must not be any statement after **THEN**. A single-line construction must not use **ENDIF**.

Arguments:
- **condition_i**
  A logical expression.
- **commands**
  One or more BASIC commands.

Example:
```
IF MPOS > (0.22 * VR(0)) THEN GOTO exceeds_length
```

Example:
```
IF IN(0) = ON THEN
  count = count + 1
  PRINT "COUNTS = ";count
  fail = 0
ELSE
  fail = fail + 1
ENDIF
```

Example:
```
IF IN(stop)=ON THEN
  OP(8,ON)
  VR(cycle_flag)=0
ELSEIF IN(start_cycle)=ON THEN
  VR(cycle_flag)=1
ELSEIF IN(step1)=ON THEN
  VR(cycle_flag)=99
ENDIF
```

Example:
```
IF key_char=$31 THEN
  GOSUB char_1
ELSEIF key_char=$32 THEN
  GOSUB char_2
ELSEIF key_char=$33 THEN
  GOSUB char_3
ELSE
  PRINT "Character unknown"
ENDIF
```

See also: N/A

3.2.176 IN

Type: I/O function

Syntax:
IN[(input_number [,final_input_number])]
IN

Description: The **IN** function returns the value of digital inputs.
- **IN** will return the binary sum of the first 32 inputs.
- **IN(input_number, final_input_number)** will return the binary sum of the group of inputs in range [**input_number**, **final_input_number**]. The two arguments must be less than 32 apart.
- **IN(input_number)** will return the value of the particular input specified by the parameter **input_number**.

Arguments:
- **input_number**
  The number of the input for which to return a value. The range for this parameter depends on the number of additional digital I/O connected over the MECHATROLINK-II or EtherCAT network. If there are no digital I/O connected, the range for this parameter is 0..31.
- **final_ input_number**
  The number of the last input for which to return a value. The range for this parameter depends on the number of additional digital I/O connected over the MECHATROLINK-II or EtherCAT network. If there are no digital I/O connected, the range for this parameter is 0..31

Example The following lines can be used to move to the position set on a thumb wheel multiplied by a factor. The thumb wheel is connected to inputs 4, 5, 6 and 7, and gives output in BCD.

```
moveloop:
  MOVEABS(IN(4,7)*1.5467)
  WAIT IDLE
  GOTO moveloop
```

The **MOVEABS** command is constructed as follows:
Step 1: **IN(4,7)** will get a number between 0 and 15.
Step 2: The number is multiplied by 1.5467 to get required distance.
Step 3: An absolute move is made to this position.

Example In this example a single input is tested:

```
test:
  WAIT UNTIL IN(4)=ON ' Conveyor is in position when ON
  GOSUB place
```

See also **OP**.

3.2.177 INCLUDE

Type System command

Syntax **INITIALISE “file_name”**

Description The **INCLUDE** command resolves all local variable definitions in the included file at compile time and allows all the local variables to be declared “globally”.
Note:
Whenever an included program is modified, all programs that depend on it are re-compiled as well, avoiding inconsistency.
(1) Nested INCLUDEs are not allowed.
(2) The INCLUDE command must be the first BASIC statement in the program.
(3) Only variable definitions are allowed in the include file. It cannot be used as a general subroutine with any other BASIC commands in it.

Arguments
- **file_name**
  The name of the program to be included.

Example Initialise all local variables with an include program.

```
PROGRAM “T1”:
'include global definitions
INCLUDE “GLOBAL_DEFS”
'Motion commands using defined vars
FORWARD AXIS(drive_axis)
CONNECT(1, drive_axis) AXIS(link_axis)

PROGRAM “GLOBAL_DEFS”:
drive_axis=4
link_axis=1
```

See also N/A.

3.2.178 INDEVICE

Type Communication parameter

Syntax **INDEVICE**

Description The **INDEVICE** parameter defines the default input device. This device will be selected for the input commands when the **#n** option is omitted. The **INDEVICE** parameter is task specific. The supported values are listed in the table below.

Value	Description
0	Programming port 0 (default)
1	RS-232C serial port 1
2	RS-422A/485 serial port 2
5	Trajexia Studio port 0 user channel 5
6	Trajexia Studio port 0 user channel 6
7	Trajexia Studio port 0 user channel 7

Arguments	N/A
Example	No example.
See also	**GET**, **INPUT**, **LINPUT**, **KEY**.

3.2.179 INITIALISE

Type	System command
Syntax	**INITIALISE**
Description	Sets all axes parameters to their default values. The parameters are also reset each time the controller is powered up, or when an **EX** (software reset) command is performed. In Trajexia Studio the menu **Reset Device** under the **Online** menu performs the equivalent of an **EX** command.
Arguments	N/A
Example	No example.
See also	**EX**.

3.2.180 INTEGER_READ

Type	System command
Syntax	**INTEGER_READ(source_variable, destination_variable_low, destination_variable_high)**
Description	The **INTEGER_READ** command splits a 64 bit variable in 2 32 bit values and copies these values to 2 other variables. The source and destination variables can be any valid system, named, **TABLE** memory or **VR** variable. The following parameters are 64 bit integers: **MOTION_ERROR**, **TICKS**, **DEMAND_EDGES**, **TRANS_DPOS**.
Arguments	• **source_variable** Variable containing the 64 bit value to read. • **destination_variable_low** Variable to copy the lower 32 bits of the source variable to.. • **destination_variable_high** Variable to copy the lower 32 bits of the source variable to..
Example	**>> INTEGER_READ(MOTION_ERROR,VR(100),VR(101))** This example will copy the first 32 bits of **MOTION_ERROR** to VR(100) and the rest to VR(101).
See also	**MOTION_ERROR**

3.2.181 INTERP_FACTOR

Type	Axis Parameter
Syntax	**INTERP_FACTOR**
Description	This parameter excludes the axis from the interpolated motion calculations so that it will become a following axis. This means that you can create an interpolated x,y move with z completing its movement over the same time period. The interpolated speed is calculated using any axes that have **INTERP_FACTOR** enabled. This means that at least one axis must be enabled and have a distance in the motion command otherwise the calculated speed will be zero and the command will complete immediately with no movement. **INTERP_FACTOR** only operates with **MOVE**, **MOVEABS** and **MHELICAL** (on the 3rd axis) including the SP versions. All other motion commands require interpolated axes and so ignore this parameter.
Arguments	

Example It is required to move a 'z' axis interpolated with x and y however we want the interpolated speed to only be active on the x,y move. We disable the z axis from the interpolation group using **INTERP_FACTOR**. Remember when the movement is complete you must enable **INTERP_FACTOR** again.

```
BASE(2)
INTERP_FACTOR=0
'Perform movement
BASE(0,1,2)
MOVEABS(x_offset, y_offset, z_offset)
WAIT IDLE
INTERP_FACTOR AXIS(12) = 1
```

See also N/A

3.2.182 INPUT

Type Communication command

Syntax **INPUT [#n], variable { , variable }**

Description The **INPUT** command will assign numerical input string values to the specified variables. Multiple input string values can be requested on one line, separated by commas, or on multiple lines separated by carriage return. The program execution will be paused until the string is terminated with a carriage return after the last variable has been assigned.
If the string is invalid, the user will be prompted with an error message and the task will be repeated. The maximum amount of inputs on one line has no limit other than the line length.
Channels 5 to 7 are logical channels that are superimposed on the programming port 0 when using Trajexia Studio.
Note: Channel 0 is reserved for the connection to Trajexia Studio and/or the Command Line Terminal interface. Please be aware that this channel may give problems for this function.

Arguments
- **n**
  The specified input device. When this argument is omitted, the port as specified by INDEVICE will be used.
- **variable**
  The variable to write to.

Example Consider the following program to receive data from the terminal.

```
INPUT#5, num
PRINT#5, "BATCH COUNT=";num[0]
```

A possible response on the terminal could be:

```
123<CR>
BATCH COUNT=123
```

See also **INDEVICE**, **GET**, **LINPUT**, **KEY**

3.2.183 INT

Type Mathematical function

Syntax **INT(expression)**

Description The **INT** function returns the integer part of the expression.
Note: To round a positive number to the nearest integer value take the **INT** function of the value added by 0.5. Similarly, to round for a negative value subtract 0.5 to the value before applying **INT**.

Arguments
- **expression**
  Any valid BASIC expression.

Example

```
>> PRINT INT(1.79)
1.0000
```

See also N/A

3.2.184 INVERT_IN

Type System command

Syntax **INVERT_IN(input, on/off)**

Description The **INVERT_IN** command allows the input channels 0..31 to be individually inverted in software. This is important as these input channels can be assigned to activate functions such as feedhold.
The **INVERT_IN** function sets the inversion for one channel ON or OFF. It can only be applied to inputs 0..31.

Arguments
- **input**
  Any valid BASIC expression

Example
```
>>? IN(3)
0.0000
>>INVERT_IN(3,ON)
>>? IN(3)
1.0000
```

Example Typical setting when POT and NOT inputs of the Servo Drive are also used for limits in Trajexia:
```
BASE(base_axis)
FWD_IN=16
INVERT_IN(16,ON)
REV_IN=17
INVERT_IN(17,ON)
```
And configure the POT and NOT inputs of the Servo Drive as required via Servo Drive parameters.

See also N/A

3.2.185 INVERT_STEP

Type Axis parameter

Syntax **INVERT_STEP**

Description **INVERT_STEP** is used to switch a signal inverter into the stepper pulse output circuit. This can be necessary for connecting to some stepper Drives. The electronic logic inside the Trajexia stepper pulse generator assumes that the FALLING edge of the step output is the active edge which results in motor movement. This is suitable for the majority of stepper Drives. Setting **INVERT_STEP=ON** effectively makes the RISING edge of the step signal the active edge. **INVERT_STEP** should be set if required prior to enabling the controller with **WDOG=ON**. Default is off.
Note: If the setting is incorrect a stepper motor may lose position by one step when changing direction.
Note: This parameter is applicable only to Flexible axis stepper output axes with ATYPE=46. With other types of axes, this parameter has no effect.

Arguments N/A

Example No example.

See also N/A

3.2.186 INVERTER_COMMAND

Type System command

Syntax
```
INVERTER_COMMAND(module, station, 1, alarm_number)
INVERTER_COMMAND(module, station, 7, operation_signals)
INVERTER_COMMAND(module, station, 8, mode)
```

Description **INVERTER_COMMAND** controls inputs and clears alarm of the Inverter connected to the system via the MECHATROLINK-II bus.
There are three **INVERTER_COMMAND** functions:
- 1: Clears an alarm.
- 7: Controls operation signals.
- 8: Set an Inverter to Servo Drive mode, so it acts as a servo axis. This is possible only for Inverters with an encoder feedback option card connected.

To use an Inverter via MECHATROLINK-II you must put the command and the reference via communication option:
- Inverter MV/V7: N3=3; N4=9
- Inverter F7/G7: B1-01=3; B1-02=3.
- Inverter V1000/A1000: b1-01=3; b1-02=3.
- Inverter MX2: A001=4; A002=4.
- Inverter RX: A001=5; A002=5.

Make sure that the Inverter firmware supports the MECHATROLINK-II board.
The command returns -1 if successfully executed and 0 if failed.
The command sent to the Inverter corresponds with the bits given in the table below.

Bit	Value	Command	Description				
			MV/V7/F7	G7	V1000	A1000	MX2
0	Hex	1	Run forward				
1	Hex	2	Run reverse				
2	Hex	4	Input 3		Input S1		Input 1
3	Hex	8	Input 4		Input S2		Input 2
4	Hex	10	Input 5		Input S3		Input 3
5	Hex	20	Input 6		Input S4		Input 4
6	Hex	40	Input 7		Input S5		Input 5
7	Hex	80	NA	Input 8	Input S6		Input 6
8	Hex	100	External fault				
9	Hex	200	Fault reset				
10	Hex	400	NA	Input 9	NA	Input S7	Input 7
11	Hex	800	NA	Input 10	NA	Input S8	NA
12	Hex	1000	NA	Input 11	NA	NA	NA
13	Hex	2000	NA	Input 12	NA	NA	NA
14	Hex	4000	Fault history data clear				
15	Hex	8000	External BB command				NA

If with function 8 the mode parameter is set to 1, the Inverter is set into servo axis mode. The corresponding axis number is assigned by the TJ2-MC__ using the formula:

AxisNo = MECHATROLINK-II Station Number - 0x21 + **AXIS_OFFSET**

Therefore the calculated AxisNo must not be occupied by another axis connected.

If with function 8 the mode parameter is set to 0, which is the default value at power-up, the Inverter is set into normal Inverter mode.

Arguments

- **module**
  The number of the TJ1-ML__ that the Inverter is connected to.
- **station**
  The MECHATROLINK-II station number of the Inverter.
- **alarm_number**
  The number of the alarm. See the Inverter manual.
- **operation_signals**
  A bitwise value to control the operation signals. See the table below.
- **mode**
  The mode to set the Inverter to:
  0 = Inverter mode. This is the default value at power-up.
  1 = Servo Drive mode.

Example

>>INVERTER_WRITE(1,$23,2,4500)
>>INVERTER_COMMAND(1,$23,7,2)
>>WA(10000)
>>INVERTER_COMMAND(1,$23,7,0)

The sequence above controls an Inverter connected via MECHATROLINK-II bus to TJ1-ML__ unit at slot 1 and with station number 23 (hex), using following steps:
Step 1: Speed reference is set to 45.00 Hz.
Step 2: The Inverter is set to run in reverse direction for 10 seconds with speed reference defined in previous step.
Step 3: The Inverter is stopped.

See also N/A

3.2.187 INVERTER_READ

Type System command

Syntax

INVERTER_READ(module, station, 0, param_number, param_size, VR [, vr_mode])
INVERTER_READ(module, station, 1, alarm_number, VR)
INVERTER_READ(module, station, 2, VR)
INVERTER_READ(module, station, 3, VR)
INVERTER_READ(module, station, 4, from, length, VR)

Description

INVERTER_READ reads the parameter, speed reference, torque reference or alarm from the Inverter connected to the system via the MECHATROLINK-II bus.
There are five **INVERTER_READ** functions:

- 0: Reads an Inverter parameter.
- 1: Reads the Inverter alarm.
- 2: Reads the speed reference.
- 3: Reads the torque reference.
- 4: Reads the Inverter inputs.

To use an Inverter via MECHATROLINK-II you must put the command and the reference via communication option:

- Inverter MV/V7: N3=3; N4=9
- Inverter F7/G7: B1-01=3; B1-02=3.
- Inverter V1000/A1000: b1-01=3; b1-02=3.
- Inverter MX2: A001=4; A002=4.
- Inverter RX: A001=5; A002=5.

Make you sure that the Inverter firmware supports the MECHATROLINK-II board.
The command returns 1 if successfully executed and 0 if failed. The result (if any) is returned in the selected VR.

Arguments

- **module**
  The number of the TJ1-ML__ that the Inverter is connected to.
- **station**
  The MECHATROLINK-II station number of the Inverter.
- **param_number**
  The number of the parameter to read. See the Inverter manual.
- **param_size**
  The size of the parameter to read, 2 or 4 bytes. Most of the Inverter parameters are 2 bytes long. See the Inverter manual.
- **VR**
  The address in the VR memory of the TJ2-MC__ where the read information is put. When the function is 4, the result is returned as a bitwise value. See the table below.
- **vr_mode** (optional)
  0: Store parameter in a single VR (default)
  1: Store parameter in multiple VRs when size > 2 (in parts of 16 bits)

Bit	Value	Command	Description				
			MV/V7/F7	G7	V1000	A1000	MX2
0	Hex	1	Run forward		Input S1		Input 1
1	Hex	2	Run reverse		Input S2		Input 2
2	Hex	4	Input 3		Input S3		Input 3
3	Hex	8	Input 4		Input S4		Input 4
4	Hex	10	Input 5		Input S5		Input 5
5	Hex	20	Input 6		Input S6		Input 6
6	Hex	40	Input 7		NA	Input S7	Input 7
7	Hex	80	NA	Input 8	NA	Input S8	NA
8	Hex	100	External fault				NA
9	Hex	200	Fault reset				NA
10	Hex	400	NA	Input 9	NA	NA	NA
11	Hex	800	NA	Input 10	NA	NA	NA
12	Hex	1000	NA	Input 11	NA	NA	NA
13	Hex	2000	NA	Input 12	NA	NA	NA
14	Hex	4000	Fault history data clear				NA
15	Hex	8000	External BB command				NA

- **alarm_number**
  The number of the alarm to read. See the Inverter manual.
- **from**
  The start address of the input to read.
- **length**
  The length of the input to read.

Example

No example.

See also

N/A

3.2.188 INVERTER_WRITE

Type: System command

Syntax:
INVERTER_WRITE(module, station, 0, param_number, param_size, VR, write_mode [, vr_mode])
INVERTER_WRITE(module, station, 2, value)
INVERTER_WRITE(module, station, 3, value)

Description: **INVERTER_WRITE** writes the parameter, speed reference or torque reference from the Inverter connected to the system via the MECHATROLINK-II bus.
There are three **INVERTER_WRITE** functions:

- 0: Writes an Inverter parameter.
- 2: Writes the speed reference.
- 3: Writes the torque reference.

To use an Inverter via MECHATROLINK-II you should put the command and the reference via communication option:

- Inverter MV/V7: N3=3; N4=9
- Inverter F7/G7: B1-01=3; B1-02=3.
- Inverter V1000/A1000: b1-01=3; b1-02=3.
- Inverter MX2: A001=4; A002=4.
- Inverter RX: A001=5; A002=5.

Make you sure that the Inverter firmware supports the MECHATROLINK-II board.
The command returns -1 if successfully executed and 0 if failed. The result (if any) is returned in the selected VR.

Arguments:

- **module**
  The number of the TJ1-ML__ that the Inverter is connected to.
- **station**
  The MECHATROLINK-II station number of the Inverter
- **param_number**
  The number of the parameter to write. See the Inverter manual.
- **param_size**
  The size of the parameter to write, 2 or 4 bytes. Most of the Inverter parameters are 2 bytes long. See the Inverter manual.
- **VR**
  The address in the VR memory of the TJ2-MC__ where the new value for the parameter is.
- **write_mode**
  0 = just write; 1= write and enter; 2 = write and config.
- **vr_mode** (optional)
  0: Write the parameter from a single VR (default)
  1: Write a parameter from multiple VRs when size > 2 (in parts of 16 bits)
- **value**
  The new value that is written.

Example:
>>INVERTER_WRITE(1,$23,2,3500)
>>INVERTER_READ(1,$23,2,100)
>>PRINT VR(100)
3500.0000

See also: N/A

NOTE
If you have to transfer many parameters at the same time, the most efficient way is to use MODE 0 for all but the last parameter, and MODE 1 for the last parameter.
MODE 0 is executed faster than MODE 1.

3.2.189 IO_STATUS

Type System parameter (read-only)

Syntax **IO_STATUS(unit, address, vr_index [, status_index])**

Description **IO_STATUS** contains the status word of an EtherCAT IO device. The definition of the bits depends on the IO device. When a bit is set (and not masked by **IO_STATUSMASK**) it will result in a system error.

Arguments
- **unit**
  the number of the EtherCAT Master Unit in the Motion Controller system to which the slave is attached
- **address**
  the (assigned) node address of the EtherCAT slave
- **vr_index**
  the VR memory address where the read status word is stored. Use -1 to print the status word to the Command Line Terminal interface.
- **status_index (optional)**
  Index of the status being read. This index is required for EtherCAT IO devices supporting more than one status word. Can be omitted for devices supporting only one status word, like GRT1-ECT.

Example Print the **IO_STATUS** of a GRT1-ECT at address 1000:
IO_STATUS(0,1000,-1)
>>32768
Print the IO_STATUS of a GRT1-ECT at address 1000 when a SmartSlice is removed:
IO_STATUS(0,1000,-1)
>>16385

See also **IO_STATUSMASK**

3.2.190 IO_STATUSMASK

Type System parameter

Syntax **IO_STATUSMASK(unit, address, read_write, vr_index or mask_value [, status index])**
IO_STATUSMASK(unit, address, 0, vr_index [, status index])
IO_STATUSMASK(unit, address, 1, mask_value [, status index])

Description With the status mask system errors triggered by an **IO_STATUS** of a device can be masked out thus preventing a system error. If a bit of an **IO_STATUS** is set and the same bit in the **IO_STATUSMASK** of the same device (and status index if applicable) is set then a system error is triggered. If the same bits in either **IO_STATUS** or **IO_STATUSMASK** (or both) are not set then this will not trigger a system error. So if a bit-wise AND operation between **IO_STATUS** and **IO_STATUSMASK** results in any bit set, it will result in a system error (bit 20 of **SYSTEM_ERROR** set).

Arguments
- **unit**
  the number of the EtherCAT Master Unit in the Motion Controller system to which the slave is attached
- **address**
  the (assigned) node address of EtherCAT slave
- **read_write**
  0: Read status mask
  1: Write status mask
- **vr_index** (if **read_write** is 0)
  Index of the VR entry where the read status mask is stored
  -1 will print the results to the terminal.
- **mask_value** (if **read_write** is 1)
  value of the status mask to be written
- **status_index (optional)**
  Index of the status being read. This index is required for EtherCAT IO devices supporting more than one status word. Can be omitted for devices supporting only one status word, like GRT1-ECT.

Example Print the current **IO_STATUSMASK** of a GRT1-ECT at address 1000:
IO_STATUSMASK(0,1000,0,-1)
>>16384
This is the default value ($4000) for the GRT1-ECT, resulting in a system error (bit 20 set in **SYSTEM_ERROR**) when a Communication Unit Error occurs in the GRT1-ECT. To prevent this, mask bit 14 also:
IO_STATUSMASK(0,1000,1,0)

See also **IO_STATUS**, **SYSTEM_ERROR**

3.2.191 JOGSPEED

Type: Axis parameter

Syntax: **JOGSPEED**

Description: The **JOGSPEED** parameter sets the jog speed in user units for an axis. A jog will be performed when a jog input for an axis has been declared and that input is low. A forward jog input and a reverse jog input are available for each axis, respectively set by **FWD_JOG** and **REV_JOG**. The speed of the jog can be controlled with the **FAST_JOG** input.

Arguments: N/A

Example: No example.

See also: **AXIS AXIS**, **FAST_JOG**, **FWD_JOG**, **REV_JOG**, **UNIT_INIT**.

3.2.192 KEY

Type: Communication parameter

Syntax: **KEY [#n]**

Description: The **KEY** parameter returns **TRUE** or **FALSE** depending on if a character has been received on an input device or not. This command does not read the character but allows the program to test if any character has arrived. A **TRUE** result will reset when the character is read with the **GET** command.
Channels 5 to 7 are logical channels that are superimposed on the programming port 0 when using Trajexia Studio.
Note: Channel 0 is reserved for the connection to Trajexia Studio and/or the Command Line Terminal interface. Please be aware that this channel may give problems for this function.

Arguments:
- **n**
  The specified input device. When this argument is omitted, the port as specified by **INDEVICE** will be used. See the table below.

Value	Input device
0	Programming port 0
1	RS-232C serial port 1
2	RS-422A/485 serial port 2
5	Trajexia Studio port 0 user channel 5
6	Trajexia Studio port 0 user channel 6
7	Trajexia Studio port 0 user channel 7

Example:
WAIT UNTIL KEY#1
GET#1, k
Beware that for using **KEY#1** in an equation may require parentheses in the statement, in this case: **WAIT UNTIL (KEY#1)=TRUE**.

See also: **GET**

3.2.193 LAST_AXIS

Type: System parameter

Syntax: **LAST_AXIS**

Description: The **LAST_AXIS** parameter contains the number of the last axis processed by the system.
Most systems do not use all the available axes. It would therefore be a waste of time to task the idle moves on all axes that are not in use. To avoid this to some extent, the TJ2-MC__ will task moves on the axes from 0 to **LAST_AXIS**, where **LAST_AXIS** is the number of the highest axis for which an **AXIS** or **BASE** command has been processed, whichever of the two is larger. **LAST_AXIS** can be modified to limit the number of virtual axes being processed.

Arguments: N/A

Example: No example.

See also: **AXIS**, **BASE**.

3.2.194 LIMIT_BUFFERED

Type	System parameter
Syntax	**LIMIT_BUFFERED**
Description	This parameter controls the maximum number of move buffers available in the controller. The maximum value is 64, default value is 1 (TJ1-MC__ compatible).
Arguments	N/A
Example	**LIMIT_BUFFERED = 10** will set the total number of available buffered moves in the controller to 10.
See also	N/A

3.2.195 LINPUT

Type	Communication command
Syntax	**LINPUT [#n ,] vr_variable**
Description	The **LINPUT** command assigns the ASCII code of the characters to an array of variables starting with the specified VR variable. Program execution will be paused until the string is terminated with a carriage return, which is also stored. The string is not echoed by the controller. Channels 5 to 7 are logical channels that are superimposed on the programming port 0 when using Trajexia Studio. Note: Channel 0 is reserved for the connection to Trajexia Studio and/or the Command Line Terminal interface. Please be aware that this channel may give problems for this command.
Arguments	• **n** The specified input device. When this argument is omitted, the port as specified by **INDEVICE** will be used. See the table below.

Value	Input device
0	Programming port 0
1	RS-232C serial port 1
2	RS-422A/485 serial port 2
5	Trajexia Studio port 0 user channel 5
6	Trajexia Studio port 0 user channel 6
7	Trajexia Studio port 0 user channel 7

• **vr_variable**
The first VR variable to write to.

Example

Consider the following line in a program.
LINPUT#5, VR(0)
Entering START<CR> on port 5 will give
VR(0)=83 ' ASCII 'S'
VR(1)=84 ' ASCII 'T'
VR(2)=65 ' ASCII 'A'
VR(3)=82 ' ASCII 'R'
VR(4)=84 ' ASCII 'T'
VR(5)=13 ' ASCII carriage return

See also **GET**, **INPUT**, **VR**

3.2.196 LIST

Type	Program command (Trajexia Studio command line only)
Syntax	**LIST ["program_name"]** **TYPE ["program_name"]**
Description	For use only with the Command Line Terminal interface. **LIST** is used as an immediate (command line) command only and must not be used in programs. The **LIST** command prints the current selected program or the program specified by **program_name**. The program name can also be specified without quotes. If the program name is omitted, the current selected program will be listed. Note: This command is implemented for an offline Command Line Terminal. Within Trajexia Studio users can use the terminal window.

Arguments
- **program_name**
  The program to be printed.

Example No example.

See also **SELECT**.

3.2.197 LIST_GLOBAL

Type System command (terminal only)

Syntax **LIST_GLOBAL**

Description When executed from the Command Line Terminal interface (channel 0), all the currently set **GLOBAL** and **CONSTANT** parameters will be printed to the terminal.

Arguments N/A

Example In an application where the following GLOBAL and CONSTANT have been set:

```
CONSTANT "cutter", 23
GLOBAL "conveyor",5

>>LIST_GLOBAL
 Global VR
 ---------------- ----
 conveyor 5
 Constant Value
 ---------------- -------
 cutter 23.0000
```

See also **CONSTANT**, **GLOBAL**

3.2.198 LN

Type Mathematical function

Syntax **LN(expression)**

Description The **LN** function returns the natural logarithm of the expression. The input expression value must be greater than 0.

Arguments
- **expression**
  Any valid BASIC expression.

Example
```
>> PRINT LN(10)
2.3026
```

See also N/A

3.2.199 LOCK

Type System command

Syntax **LOCK(code)**
UNLOCK(code)

Description The **LOCK** command prevents the program from being viewed, modified or deleted by personnel unaware of the security code. The lock code number is stored in the Flash-PROM. The **UNLOCK** command allows the locked state to be unlocked. The code number can be any integer and is held in encoded form. **LOCK** is always an immediate command and can be issued only when the system is **UNLOCKED**.
LOCK and **UNLOCK** are available from within Trajexia Studio, users can select **Lock Device** from the **Online** menu.

Arguments
- **code**
  Any valid integer with maximum 7 digits.

Example
```
>> LOCK(561234)
The programs cannot be modified or seen.
>> UNLOCK(561234)
The system is now unlocked.
```

See also N/A

CAUTION
The security code must be remembered; it will be required to unlock the system. Without the security code the system can not be recovered.

3.2.200 MARK

Type	Axis parameter (read-only)
Syntax	**MARK**
Description	The **MARK** is set to **FALSE** when the **REGIST** command has been executed and is set to **TRUE** when the primary registration event occurs. Only when this parameter is **TRUE**, the **REG_POS** value is correct.
Arguments	N/A
Example	**loop:** **WAIT UNTIL IN(punch_clr)=ON** **MOVE(index_length)** **REGIST(3)** **WAIT UNTIL(MARK)** **MOVEMODIFY(REG_POS + offset)** **WAIT IDLE** **GOTO loop**
See also	**AXIS**, **REGIST**, **REG_POS**.

3.2.201 MARKB

Type	Axis parameter (read-only)
Syntax	**MARKB**
Description	The **MARKB** is set to **FALSE** when the **REGIST** command has been executed and is set to **TRUE** when the primary registration event occurs. Only when this parameter is **TRUE**, the **REG_POS**B value is correct.
Arguments	N/A

Example	**IF MARKB AXIS(2) THEN**
	PRINT "Secondary registration event for axis 2 occurred"
	ENDIF

See also	**AXIS**, **REGIST**, **REG_POSB**.

3.2.202 MECHATROLINK

Type	System command
Syntax	**MECHATROLINK(unit,0)** Detects and connects devices on MECHATROLINK-II Master Unit **unit**. It is necessary to use it to reset the network from a communication problem and to re-detect servos that have been not detected (EG: when the A letter in the **AXISSTATUS** word becomes capital red). **MECHATROLINK(unit,3,VR)** Returns the number of detected MECHATROLINK-II devices after a **MECHATROLINK(unit,0)**. It is used by the **SHELL** program to check that the number of detected MECHATROLINK-II stations corresponds with the expected. **MECHATROLINK(unit,4,station,VR)** Returns the address of MECHATROLINK-II device at that “station” number. The station numbers are a sequence 0..x for all the attached devices. -1 is returned if no device is allocated to that station. It is used by the **SHELL** program to check that the number of detected MECHATROLINK-II stations corresponds with the expected. **MECHATROLINK(unit,5,station,VR)** Reads and clears missed message count. A Non-Axis MECHATROLINK-II device does not report automatically a network problem so, use this command to poll the Inverter and IO modules for checking that the network is alive. Note: • You can use the command **MECHATROLINK(unit,5,station,VR)** to monitor the status of a device during a program execution. If the contents of the VR address is greater than 0 a communication error with the device occurs and the device can malfunction. You can use this command to stop your program when the device has an error.
Description	Note: This command has two forms, depending upon the function required: Master and Station Functions. All **MECHATROLINK** functions return **TRUE** (-1) if the command was successful or **FALSE** (0) if the command failed. The functions are separated out into 2 types, **Master** functions that work on a unit, and **Station** functions that work on a specific **station_address** of a given unit. All functions that retrieve a value store it in the **VR** variable indicated in the last parameter. If this parameter has the value -1 then the value is printed to the command line port.

Arguments N/A

Example No example.

See also N/A

3.2.203 MERGE

Type Axis parameter

Syntax **MERGE**

Description The **MERGE** parameter is a software switch that can be used to enable or disable the merging of consecutive moves. When **MERGE** is ON and the next move already in the next move buffer (**NTYPE**), the axis will not ramp down to 0 speed but will load up the following move enabling a seamless merge. The default setting of **MERGE** is OFF.
It is up to the programmer to ensure that merging is sensible. For example, merging a forward move with a reverse move will cause an attempted instantaneous change of direction.
MERGE will only function if the following are all true:

1. Only the speed profiled moves **MOVE**, **MOVEABS**, **MOVECIRC**, **MHELICAL**, **REVERSE**, **FORWARD** and **MOVEMODIFY** can be merged with each other. They cannot be merged with linked moves **CONNECT**, **MOVELINK** and **CAMBOX**.
2. There is a move in the next move buffer (**NTYPE**).
3. The axis group does not change for multi-axis moves.

When merging multi-axis moves, only the base axis **MERGE** axis parameter needs to be set.
Note: If the moves are short, a high deceleration rate must be set to avoid the TJ2-MC__ decelerating in anticipation of the end of the buffered move.

Arguments N/A

Example **MERGE = OFF ' Decelerate at the end of each move**
MERGE = ON ' Moves will be merged if possible

See also **AXIS**.

3.2.204 MHELICAL

Type Axis command

Syntax **MHELICAL(end1, end2, centre1, centre2, direction, distance3 [,mode]))**
MH(end1, end2, centre1, centre2, direction, distance3 [,mode])

Description Performs a helical move, that is, moves 2 orthogonal axes in such a way as to produce a circular arc at the tool point with a simultaneous linear move on a third axis. The first 5 parameters are similar to those of a **MOVECIRC** command. The sixth parameter defines the simultaneous linear move.
end1 and **centre1** are on the current **BASE** axis. **end2** and **centre2** are on the following axis.
The first 4 distance parameters are scaled according to the current unit conversion factor for the BASE axis. The sixth parameter uses its own axis units.

Arguments

- **end1**
  Position on **BASE** axis to finish at.
- **end2**
  Position on next axis in **BASE** array to finish at.
- **centre1**
  Position on **BASE** axis about which to move.
- **centre2**
  Position on next axis in **BASE** array about which to move.
- **direction**
  The **direction** is a software switch which determines whether the arc is interpolated in a clockwise or anti- clockwise direction. The parameter is set to 0 or 1. See **MOVECIRC**.
- **distance3**
  The distance to move on the third axis in the **BASE** array axis in user units.
- **mode**
  0 = Interpolate the third axis with the main two axis when calculating path speed (true helical path).
  1 = Interpolate only the first two axes for path speed, but move the third axis in coordination with the other 2 axes (circular path with following third axis). See second example below.

Example

The command sequence follows a rounded rectangle path with axis 1 and 2. Axis 3 is the tool rotation so that the tool is always perpendicular to the product. The **UNITS** for axis 3 are set such that the axis is calibrated in degrees.

```
REP_DIST AXIS(3)=360
REP_OPTION AXIS(3)=ON
' all 3 axes must be homed before starting
MERGE=ON
MOVEABS(360) AXIS(3) point axis 3 in correct starting direction
WAIT IDLE AXIS(3)
MOVE(0,12)
MHELICAL(3,3,3,0,1,90)
MOVE(16,0)
MHELICAL(3,-3,0,-3,1,90)
MOVE(0,-6)
MHELICAL(-3,-3,-3,0,1,90)
MOVE(-2,0)
MHELICAL(-3,3,0,3,1,90)
```

fig. 39

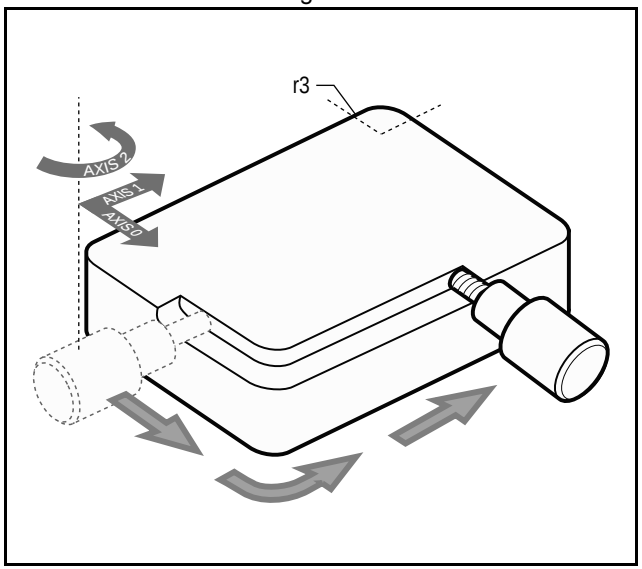

Example

A PVC cutter uses 2 axes similar to a X-Y plotter. The third axis is used to control the cutting angle of the knife. To keep the resultant cutting speed for the x and y axis equal when cutting curves, mode 1 is applied to the helical command.

```
BASE(0,1,2) : MERGE=ON
'merge moves into one continuous movement
MOVE(50,0)
MHELICAL(0,-6,0,-3,1,180,1)
MOVE(-22,0)
WAIT IDLE
MOVE(-90) AXIS(2) 'rotate the knife after stopping at corner
WAIT IDLE AXIS(2)
MOVE(0,-50)
MHELICAL(-6,0,-3,0,1,180,1)
MOVE(0,50)
WAIT IDLE 'pause again to rotate the knife
MOVE(-90) AXIS(2)
WAIT IDLE AXIS(2)
MOVE(-22,0)
MHELICAL(0,6,0,3,1,180,1)
WAIT IDLE
```

fig. 40

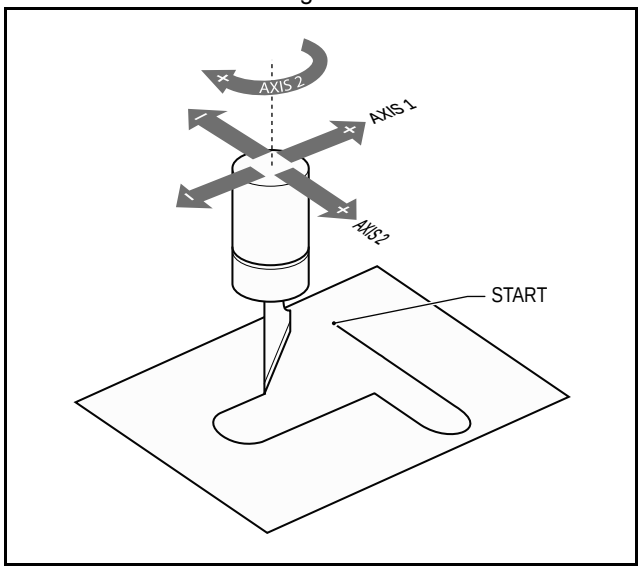

See also **MOVECIRC**.

3.2.205 MHELICALSP

Type: Axis command

Syntax: **MHELICALSP(end1, end2, centre1, centre2, direction, distance3 [,mode]))**

Description: Works as **MHELICALSP** and additionally allows vector speed to be changed when using multiple moves in the look ahead buffer when **MERGE=ON**, using additional parameters **FORCE_SPEED**, **ENDMOVE_SPEED**.
When the command is loaded into the move buffer the **FORCE_SPEED** and **ENDMOVE_SPEED** parameters are copied into the buffer with the move.
FORCE_SPEED defines the speed of the motion command.
ENDMOVE_SPEED defines the ramp to exit speed.
If two forced speed move types are merged, the speed at the merge point is controlled by the **ENDMOVE_SPEED** of the outgoing move. If a forced speed move follows one or more non-forced speed moves the deceleration will occur to the **FORCE_SPEED** of the incoming move.

Arguments:
- **end1**
  Position on **BASE** axis to finish at.
- **end2**
  Position on next axis in **BASE** array to finish at.
- **centre1**
  Position on **BASE** axis about which to move.
- **centre2**
  Position on next axis in **BASE** array about which to move.
- **direction**
  The **direction** is a software switch which determines whether the arc is interpolated in a clockwise or anti- clockwise direction. The parameter is set to 0 or 1. See **MOVECIRC**.
- **distance3**
  The distance to move on the third axis in the **BASE** array axis in user units.
- **mode**
  0 = Interpolate the third axis with the main two axis when calculating path speed (true helical path).
  1 = Interpolate only the first two axes for path speed, but move the third axis in coordination with the other 2 axes (circular path with following third axis).

Example: In a series of buffered moves using the look ahead buffer with **MERGE**=ON a helical move is required where the incoming vector speed is 40 units/second and the finishing vector speed is 20 units/second.
FORCE_SPEED=40
ENDMOVE_SPEED=20
MHELICALSP(100,100,0,100,1,100)

See also: **MHELICAL**, **FORCE_SPEED**, **ENDMOVE_SPEED**

3.2.206 MOD

Type: Mathematical function

Syntax: **expression1 MOD expression2**

Description: The **MOD** function returns the **expression2** modulus of **expression1**. This function will take the integer part of any non-integer input.

Arguments:
- **expression1**
  Any valid BASIC expression.
- **expression2**
  Any valid BASIC expression.

Example:
>> PRINT 122 MOD 13
5.0000

See also: N/A

3.2.207 MOTION_ERROR

Type	System parameter (read-only)
Syntax	**MOTION_ERROR**
Description	The **MOTION_ERROR** parameter contains a bit pattern showing the axes which have a motion error. For example. if axis 2 and 6 have the motion error the **MOTION_ERROR** value would be 68 (4+64). A motion error occurs when the **AXISSTATUS** state for one of the axes matches the **ERRORMASK** setting. In this case the enable switch (**WDOG**) will be turned off, and **MOTION_ERROR** contains a bit pattern showing all axes which have the motion error. The **ERROR_AXIS** parameter will contain the number of the first axis to have the error. Due to technical limitations **MOTION_ERROR** can return an invalid bit pattern when multiple axes have a motion error. To obtain the correct value use the **INTEGER_READ** command to get the bit pattern in 2 parts. A motion error can be cleared executing a **DATUM(0)** command or resetting the controller with an EX command.
Arguments	N/A
Example	No example.
See also	**AXIS**, **AXIS_FS_LIMIT**, **DATUM**, **ERROR_AXIS**, **ERRORMASK**, **WDOG**, **INTEGER_READ**.

3.2.208 MOVE

Type	Axis command
Syntax	**MOVE(distance_1 [, distance_2 [, distance_3 [, distance_4 [, ...]]]])** **MO(distance_1 [, distance_2 [, distance_3 [, distance_4 [, ...]]]])**
Description	The **MOVE** command moves with one or more axes at the demand speed and acceleration and deceleration to a position specified as increment from the current position. In multi-axis moves the movement is interpolated and the speed, acceleration and deceleration are taken from the base axis. The specified distances are scaled using the unit conversion factor in the **UNITS** axis parameter. If, for example, an axis has 4,000 encoder edges/mm, then the number of units for that axis would be set to 4000, and **MOVE**(12.5) would move 12.5 mm. Note that the electronic gear ratio parameters of the Servo Drive can be used to adjust the number of encoder pulses per linear axis distance. For details see 5.1.3. **MOVE** works on the default basis axis group (set with **BASE**) unless **AXIS** is used to specify a temporary base axis. Argument **distance_1** is applied to the base axis, **distance_2** is applied to the next axis, etc. By changing the axis between individual **MOVE** commands, uninterpolated, unsynchronised multi-axis motion can be achieved. Incremental moves can be merged for profiled continuous path movements by turning on the **MERGE** axis parameter. Considering a 2-axis movement, the individual speeds are calculated using the equations below. Given command **MOVE(**x_1,x_2**)** and the profiled speed v_p as calculated from the **SPEED**, **ACCEL** and **DECEL** parameters from the base axis and the total multi-axes distance L = **SQR(**$x_1^2 + x_2^2$**)**. The individual speed v_i for axis i at any time of the movement is calculated as: $v_i = (x_i * v_p) / L$.
Arguments	The command can take up to 64 arguments. • **distance_i** The distance to move for every axis in user units starting with the base axis.
Example	A system works with a unit conversion factor of 1 and has a 1000 line encoder. Note that a 1000 line encoder gives 4000 edges/turn. **MOVE(40000) ' move 10 turns on the motor.**

Example

Axes 3, 4 and 5 must move independently, that is, without interpolation. Each axis moves at its own programmed **SPEED**, **ACCEL** and **DECEL** etc.

```
'setup axis speed and enable
BASE(3)
SPEED=5000
ACCEL=100000
DECEL=150000
SERVO=ON
BASE(4)
SPEED=5000
ACCEL=150000
DECEL=560000
SERVO=ON
BASE(5)
SPEED=2000
ACCEL=320000
DECEL=352000
SERVO=ON
WDOG=ON
MOVE(10) AXIS(5) 'start moves
MOVE(10) AXIS(4)
MOVE(10) AXIS(3)
WAIT IDLE AXIS(5) 'wait for moves to finish
WAIT IDLE AXIS(4)
WAIT IDLE AXIS(3)
```

Example An X-Y plotter can write text at any position within its working envelope. Individual characters are defined as a sequence of moves relative to a start point. Therefore, the same commands can be used regardless of the plot origin. The command subroutine for the letter M is:

```
write_m:
  MOVE(0,12) 'move A > B
  MOVE(3,-6) 'move B > C
  MOVE(3,6) 'move C > D
  MOVE(0,-12)'move D > E
RETURN
```

See also **AXIS**, **MOVEABS**, **UNIT_INIT**.

fig. 41

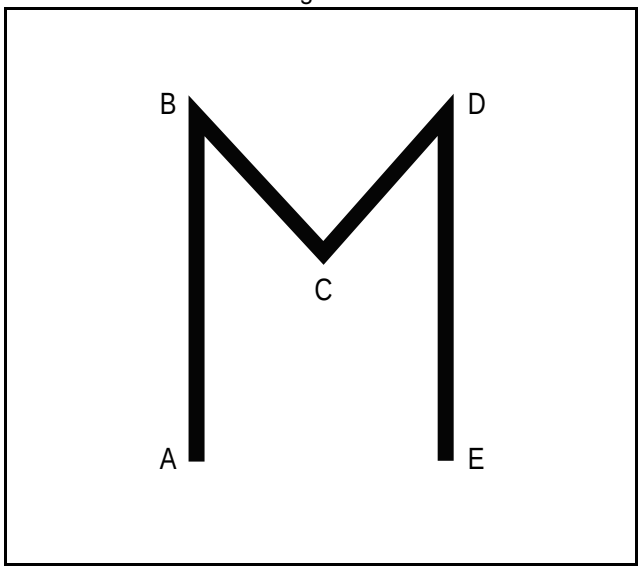

3.2.209 MOVEABS

Type	Axis command
Syntax	**MOVEABS(distance_1 [, distance_2 [, distance_3 [, distance_4 [, ...]]]])** **MA(distance_1 [, distance_2 [, distance_3 [, distance_4 [, ...]]]])**
Description	The **MOVEABS** command moves one or more axes at the demand speed, acceleration and deceleration to a position specified as absolute position, i.e., in reference to the origin. In multi-axis moves the movement is interpolated and the speed, acceleration and deceleration are taken from the base axis. The specified distances are scaled using the unit conversion factor in the **UNITS** axis parameter. If, for example, an axis has 4,000 encoder edges/mm, then the number of units for that axis would be set to 4000, and **MOVEABS**(12.5) would move to a position 12.5 mm from the origin.**MOVEABS** works on the default basis axis group (set with **BASE**) unless **AXIS** is used to specify a temporary base axis. Argument **distance_1** is applied to the base axis, **distance_2** is applied to the next axis, etc. By changing the axis between individual **MOVE** commands, uninterpolated, unsynchronised multi-axis motion can be achieved. Absolute moves can be merged for profiled continuous path movements by turning on the **MERGE** axis parameter. Considering a 2-axis movement, the individual speeds are calculated using the equations below. Given command **MOVE(**ax_1,ax_2**)**, the current position (ay_1,ay_2) and the profiled speed v_p as calculated from the **SPEED**, **ACCEL** and **DECEL** parameters from the base axis and the total multi-axes distance L = **SQR(**$x_1^2 + x_2^2$**)**, where $x_1 = ax_i - ay_i$. The individual speed for axis at any time of the movement is calculated as $v_i = (x_i \times v_p) / L$.
Arguments	The command can take up to 64 arguments. • **distance_i** The position to move every axis *i* to in user units starting with the base axis.

NOTE
Absolute moves are converted to incremental moves as they enter the buffer. This is essential as the vector length is required to calculate the start of deceleration. It should be noted that if any move in the buffer is cancelled by the programmer, the absolute position will not be achieved.

Example A machine must move to one of 3 positions depending on the selection made by 2 switches. The options are home (if both switches are off), position 1 (if the first switch is on and the second switch is off) and position 2 (if the first switch is off and the second switch is on). Position 2 has priority over position 1.

```
'define absolute positions
home=1000
position_1=2000
position_2=3000
WHILE IN(run_switch)=ON
  IF IN(6)=ON THEN 'switch 6 selects position 2
    MOVEABS(position_2)
    WAIT IDLE
  ELSEIF IN(7)=ON THEN 'switch 7 selects position 1
    MOVEABS(position_1)
    WAIT IDLE
  ELSE
    MOVEABS(home)
    WAIT IDLE
  ENDIF
WEND
```

fig. 42

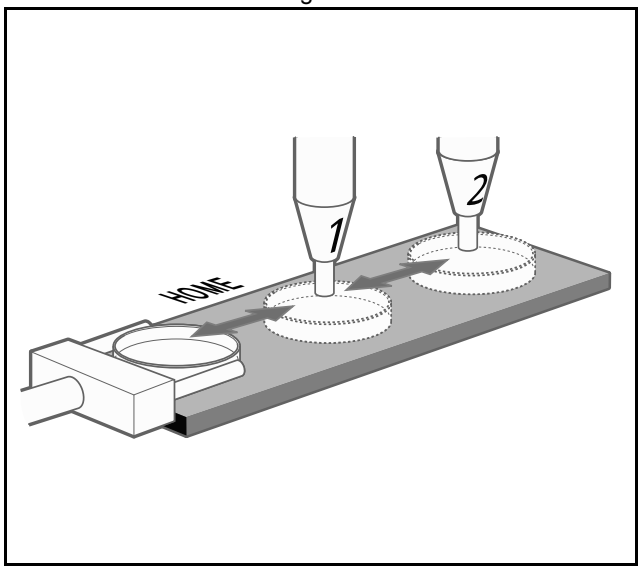

Example An X-Y plotter has a pen carousel. The position of this carousel is fixed relative to the absolute zero position of the plotter. To change pens, an absolute move to the carousel position finds the target irrespective of the plot position.

```
MOVEABS(28.5,350) ' move to just outside the pen holder area
WAIT IDLE
SPEED = pen_pickup_speed
MOVEABS(20.5,350) ' move in to pick up the pen
```

Example A pallet consists of a 6 by 8 grid in which gas canisters are inserted 185 mm apart by a packaging machine. The canisters are picked up from a fixed point. The first position in the pallet is defined as position 0,0 with the **DEFPOS** command. The part of the program to position the canisters in the pallet is:

```
FOR x=0 TO 5
  FOR y=0 TO 7
    MOVEABS(-340,-516.5) 'move to pick-up point
    WAIT IDLE
    GOSUB pick 'call pick up subroutine
    PRINT Move to Position: ;x*6+y+1
    MOVEABS(x*185,y*185) 'move to position in grid
    WAIT IDLE
    GOSUB place 'call place down subroutine
  NEXT y
NEXT x
```

See also **AXIS**, **MOVE**, **MOVEABS**, **UNIT_INIT**.

fig. 43

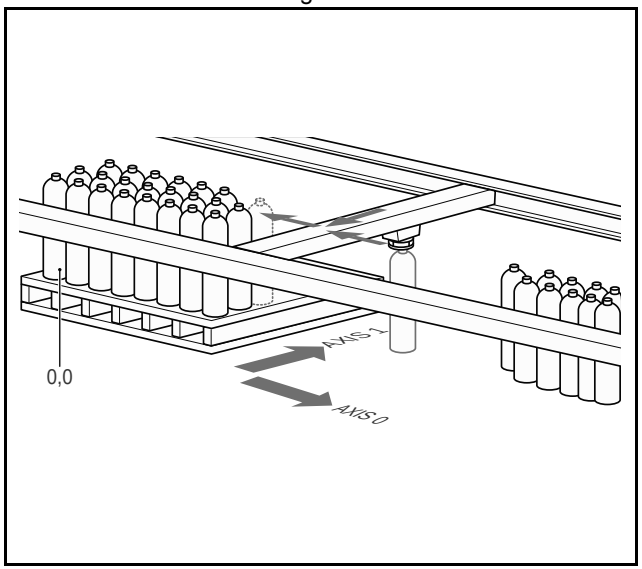

3.2.210 MOVEABSSP

Type Axis command

Syntax **MOVEABSSP(position_1 [, position_2 [, position_3 [, ...]]])**

Description Works as **MOVEABSSP** and additionally allows vector speed to be changed when using multiple moves in the look ahead buffer when **MERGE=ON**, using additional parameters **FORCE_SPEED**, **ENDMOVE_SPEED**.
When the command is loaded into the move buffer the **FORCE_SPEED** and **ENDMOVE_SPEED** parameters are copied into the buffer with the move.
FORCE_SPEED defines the speed of the motion command.
ENDMOVE_SPEED defines the ramp to exit speed.
If two forced speed move types are merged, the speed at the merge point is controlled by the **ENDMOVE_SPEED** of the outgoing move. If a forced speed move follows one or more non-forced speed moves the deceleration will occur to the **FORCE_SPEED** of the incoming move.

Arguments The command can take up to 64 arguments.

- **position_i**
  The position to move to for every axis in user units starting with the base axis.

Example In a series of buffered moves using the look ahead buffer with **MERGE**=ON, an absolute move is required where the incoming vector speed is 40 units/second and the finishing vector speed is 20 units/second.

```
FORCE_SPEED=40
ENDMOVE_SPEED=20
MOVEABSSP(100,100)
```

See also **MOVEABS**, **FORCE_SPEED**, **ENDMOVE_SPEED**

3.2.211 MOVECIRC

Type Axis command

Syntax **MOVECIRC(end_1,end_2,centre_1,centre_2,direction)**
MC(end_1,end_2,centre_1,centre_2,direction)

Description The **MOVECIRC** command interpolates 2 orthogonal axes in a circular arc at the tool point. The path of the movement is determined by the 5 arguments, which are incremental from the current position.
The arguments **end_1** and **centre_1** apply to the **BASE** axis and **end_2** and **centre_2** apply to the following axis. All arguments are given in user units of each axis. The speed of movement along the circular arc is set by the **SPEED**, **ACCEL** and **DECEL** parameters of the **BASE** axis. The first four distance parameters are scaled according to the current unit conversion factor for the **BASE** axis.
MOVECIRC works on the default basis axis group (set with **BASE**) unless **AXIS** is used to specify a temporary base axis.
For **MOVECIRC** to be correctly executed, the two axes moving in the circular arc must have the same number of encoder pulses per linear axis distance. If they do not, it is possible to adjust the encoder scales in many cases by adjusting with **ENCODER_RATIO** axis parameters for a Flexible axis or with the gear ratio in the Servo Drive of a MECHATROLINK-II or EtherCAT axis.

Arguments

- **end_1**
  The end position for the **BASE** axis.
- **end_2**
  The end position for the next axis.
- **centre_1**
  The position around which the **BASE** axis is to move.
- **centre_2**
  The position around which the next axis is to move.
- **direction**
  A software switch that determines whether the arc is interpolated in a clockwise or counterclockwise direction. Value: 0 or 1.
  If the two axes involved in the movement form a right-hand axis, set direction to 0 to produce positive motion about the third (possibly imaginary) orthogonal axis. If the two axes involved in the movement form a left-hand axis. set direction to 0 to produce negative motion about the third (possibly imaginary) orthogonal axis. See the table below.

fig. 44

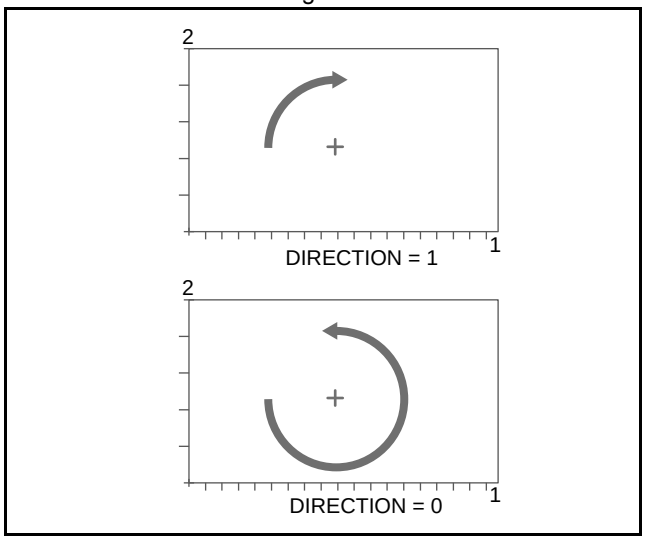

Direction	Right-hand axis	Left-hand axis
0	Positive	Negative
1	Negative	Positive

Note: The **MOVECIRC** computes the radius and the total angle of rotation from the centre, and end-point. If the end point is not on the calculated path, the move simply ends at the computed end and not the specified end point. It is the responsibility of the programmer to ensure that the two points correspond to correct points on a circle.
Note: Neither axis may cross the set absolute repeat distance **REP_DIST** during a **MOVECIRC. Doing so may cause one or both axis to jump or for their FE value to exceed FE_LIMIT.**

fig. 45

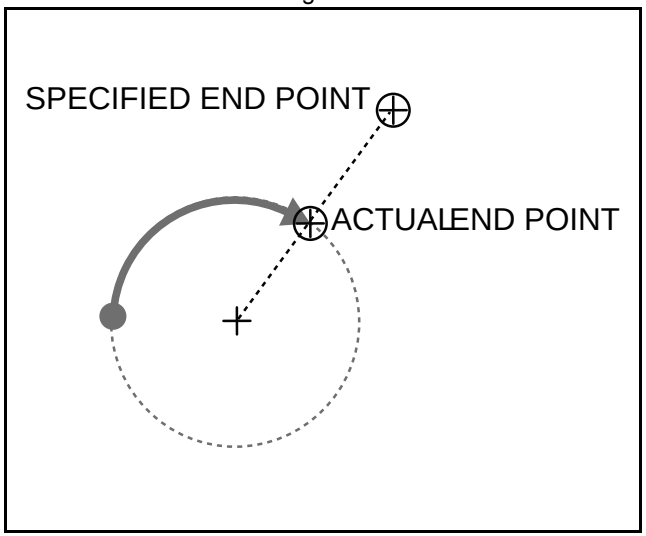

fig. 46

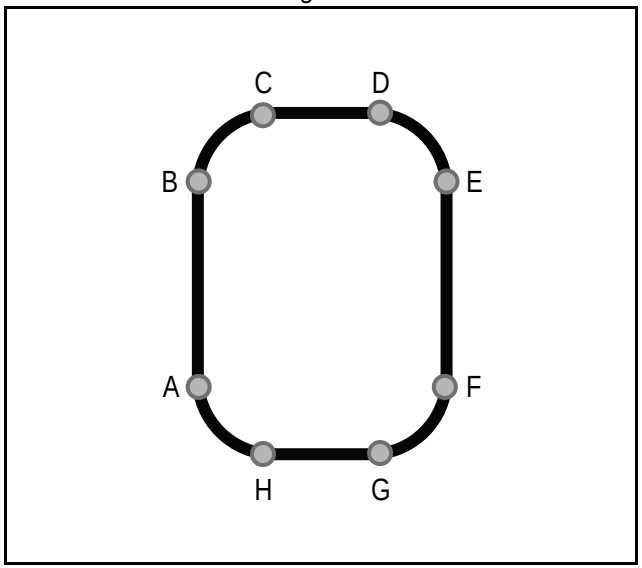

Example The following command sequence plots the letter O:

```
MOVE(0,6) ' Move A -> B
MOVECIRC(3,3,3,0,1) ' Move B -> C
MOVE(2,0) ' Move C -> D
MOVECIRC(3,-3,0,-3,1) ' Move D -> E
MOVE(0,-6) ' Move E -> F
MOVECIRC(-3,-3,-3,0,1) ' Move F -> G
MOVE(-2,0) ' Move G -> H
MOVECIRC(-3,3,0,3,1)  ' Move H -> A
```

Example

A machine is required to drop chemicals into test tubes. The nozzle can move up and down and also along its rail. The most efficient motion for the nozzle is to move in an arc between the test tubes.

```
BASE(0,1)
MOVEABS(0,5) 'move to position above first tube
MOVEABS(0,0) 'lower for first drop
WAIT IDLE
OP(15,ON) 'apply dropper
WA(20)
OP(15,OFF)
FOR x=0 TO 5
   MOVECIRC(5,0,2.5,0,1) 'arc between the test tubes
   WAIT IDLE
   OP(15,ON) 'Apply dropper
   WA(20)
   OP(15,OFF)
NEXT x
MOVECIRC(5,5,5,0,1) 'move to rest position
```

fig. 47

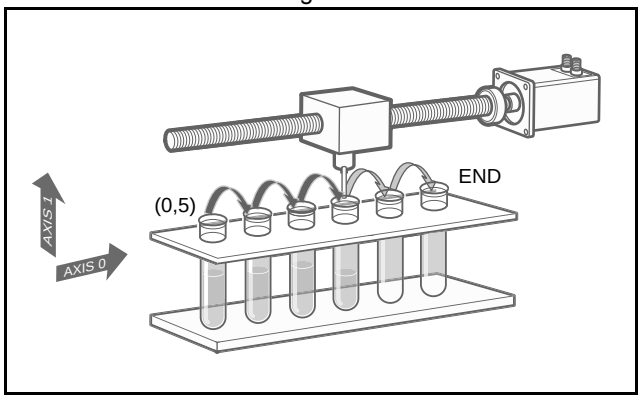

See also **AXIS**, **ENCODER_RATIO**, **UNIT_INIT**

3.2.212 MOVECIRCSP

Type	Axis command
Syntax	**MOVECIRCSP(end_1, end_2, centre_1, centre_2, direction)**
Description	Works as **MOVECIRCSP** and additionally allows vector speed to be changed when using multiple moves in the look ahead buffer when **MERGE=ON**, using additional parameters **FORCE_SPEED**, **ENDMOVE_SPEED**. When the command is loaded into the move buffer the **FORCE_SPEED** and **ENDMOVE_SPEED** parameters are copied into the buffer with the move. **FORCE_SPEED** defines the speed of the motion command. **ENDMOVE_SPEED** defines the ramp to exit speed. If two forced speed move types are merged, the speed at the merge point is controlled by the **ENDMOVE_SPEED** of the outgoing move. If a forced speed move follows one or more non-forced speed moves the deceleration will occur to the **FORCE_SPEED** of the incoming move.
Arguments	• **end_1** The end position for the **BASE** axis. • **end_2** The end position for the next axis. • **centre_1** The position around which the **BASE** axis is to move. • **centre_2** The position around which the next axis is to move. • **direction** A software switch that determines whether the arc is interpolated in a clockwise or counterclockwise direction. Value: 0 or 1. If the two axes involved in the movement form a right-hand axis, set direction to 0 to produce positive motion about the third (possibly imaginary) orthogonal axis. If the two axes involved in the movement form a left-hand axis. set direction to 0 to produce negative motion about the third (possibly imaginary) orthogonal axis.
Example	No example.
See also	**MOVECIRC**, **FORCE_SPEED**, **ENDMOVE_SPEED**

3.2.213 MOVELINK

Type	Axis command
Syntax	**MOVELINK(distance, link_distance, link_acceleration, link_deceleration, link_axis [, link_option [, link_position]])** **MOVELINK(distance, link_distance, link_acceleration, link_deceleration, link_axis [, link_option [, channel]])**
Description	The **MOVELINK** command creates a linear move on the base axis linked via a software gearbox to the measured position of a link axis. The link axis can move in either direction to drive the output motion. The parameters show the distance the BASE axis moves for a certain distance of the link axis (**link_distance**). The link axis distance is divided into three phases that apply to the movement of the base axis. These parts are the acceleration, the constant speed and the deceleration. The link acceleration and deceleration distances are specified by the **link_acceleration** and **link_deceleration** parameters. The constant speed link distance is derived from the total link distance and these two parameters. The three phases can be divided into separate **MOVELINK** commands or can be added up together into one. Consider the following two rules when setting up the **MOVELINK** command. Rule 1: In an acceleration and deceleration phase with matching speed, the **link_distance** must be twice the distance. See the figure. Rule 2: In a constant speed phase with matching speeds, the two axes travel the same distance so the distance to move must equal the **link_distance**. **MOVELINK** works on the default basis axis group (set with **BASE**) unless **AXIS** is used to specify a temporary base axis. The axis set for **link_axis** drives the base axis. **MOVELINK** is designed for controlling movements such as: • Synchronization to conveyors • Flying shears • Thread chasing, tapping etc. • Coil winding Note: If the sum of **link_acceleration** and **link_deceleration** is greater than **link_distance**, they are both reduced in proportion in order to equal the sum to **link_distance**.

Arguments

- **distance**
  The incremental distance in user units to move the BASE axis, as a result of the measured **link_distance** movement on the link axis.
- **link_distance**
  The positive incremental distance in user units that is required to be measured on the link axis to result in the distance motion on the BASE axis.
- **link_acceleration**
  The positive incremental distance in user units on the link axis over which the base axis will accelerate.
- **link_deceleration**
  The positive incremental distance in user units on the link axis over which the base axis will decelerate.
  Note: If the sum of parameter 3 and parameter 4 is greater than parameter 2, they are both reduced in proportion until their sum equals parameter 2.
- **link axis**
  The axis to link to.
- **link_option**
  See the table below.

fig. 48

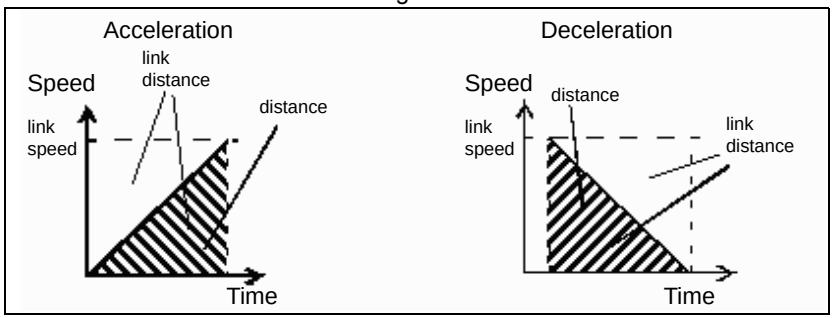

Link option	Description
1	Link starts when primary (**MARK**) registration event occurs on link axis.
2	Link starts at an absolute position on link axis (see **link_position**).
4	**MOVELINK** repeats automatically and bidirectionally. This option is cancelled by setting bit 1 of **REP_OPTION** parameter (that is, **REP_OPTION = REP_OPTION OR 2**).
5	Combination of starting on primary registration and options 4.
6	Combination of options 2 and 4.
256	Link starts when secondary (**MARKB**) registration event occurs on link axis.
260	Combination of starting on secondary registration and options 4.
512	Link starts when **R_MARK(channel)** registration event occurs on link axis.
516	Combination of starting on **R_MARK** and options 4.

- **link_position**
  The absolute position where **MOVELINK** will start when **link_option** is set to 2
- **channel**
  When **link_option** 512 or 516 is selected: registration input number of the TJ2-ECT__

Note: The command uses the **BASE** and **AXIS**, and unit conversion factors in a similar way to other MOVE commands.
Note: The “link” axis may move in either direction to drive the output motion. The link distances specified are always positive.

Example

A flying shear that moves at the speed of the material cuts a long sheet of paper into cards every 160 m. The shear can move up to 1.2 metres, of which 1m is used in this example. The paper distance is measured by an encoder. The unit conversion factor is set to give units of metres on both axes. Note that axis 7 is the link axis.

```
WHILE IN(2)=ON
  MOVELINK(0,150,0,0,7) ' dwell (no movement) for 150m
  MOVELINK(0.3,0.6,0.6,0,7) ' accelerate to paper speed
  MOVELINK(0.7,1.0,0,0.6,7) ' track the paper then decelerate
  WAIT LOADED ' wait until acceleration movelink is finished
  OP(8,ON) ' activate cutter
  MOVELINK(-1.0,8.4,0.5,0.5,7)  retract cutter back to start
  WAIT LOADED
  OP(8,OFF) ' deactivate cutter at end of outward stroke
WEND
```

In this program, the controller waits for the roll to feed out 150 m in the first line. After this distance the shear accelerates to match the speed of the paper, moves at the same speed, and then decelerates to a stop within the 1 m stroke. This movement is specified using two separate **MOVELINK** commands. This allows the program to wait for the next move buffer to be clear, **NTYPE=0**, which indicates that the acceleration phase is complete. Note that the distances on the measurement axis (the link distance in each **MOVELINK** command), 150, 0.8, 1.0 and 8.2, add up to 160 m. To make sure that the speed and the positions of the cutter and paper match during the cut process, the parameters of the **MOVELINK** command must be correct. The easiest way to do this is to consider the acceleration, constant speed and deceleration phases separately, and then combine them as required, according to these 2 rules:

fig. 49

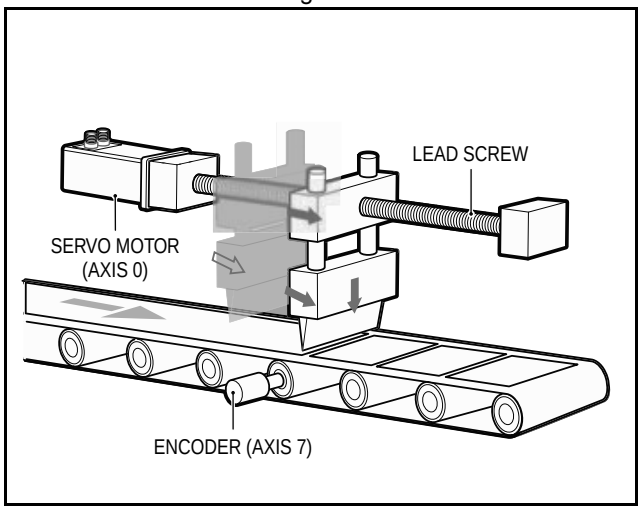

Rule 1: In an acceleration phase to a matching speed, the link distance must be twice the movement distance. Therefore, the acceleration phase can be specified alone as:
MOVELINK(0.3,0.6,0.6,0,1)' move is all accel
Rule 2: In a constant speed phase with matching speed, the two axes move the same distance. Therefore, the distance to move must be equal the link distance. Therefore, the constant speed phase can be specified as:
MOVELINK(0.4,0.4,0,0,1)' all constant speed
The deceleration phase is set in this case to match the acceleration:
MOVELINK(0.3,0.6,0,0.6,1)' all decel
The movements of each phase can be added to give the total movement.
MOVELINK(1,1.6,0.6,0.6,1)' Same as 3 moves above
But in the example above, the acceleration phase is kept separate:
MOVELINK(0.3,0.6,0.6,0,1)
MOVELINK(0.7,1.0,0,0.6,1)
This allows the output to be switched on at the end of the acceleration phase.

Example

MOVELINK can be used to create an exact ratio gearbox between two axes. Suppose it is required to create a gearbox link of 4000/3072. This ratio is inexact (1.30208333). If this ratio is entered into a **CONNECT** command, the axes will slowly creep out of synchronisation. To prevent this problem, set the “link option” to 4 to make **MOVELINK** repeat continuously.
MOVELINK(4000,3072,0,0,linkaxis,4)

Example In this example on coil winding the unit conversion factors **UNITS** are set so that the payout movements are in mm and the spindle position is measured in revolutions. The payout eye therefore moves 50 mm over 25 revolutions of the spindle with the command **MOVELINK(50,25,0,0,linkax)**. To accelerate over the first spindle revolution and decelerate over the final 3 use the command **MOVELINK(50,25,1,3,linkax)**.

```
OP(motor,ON) ' Switch spindle motor on
FOR layer=1 TO 10
  MOVELINK(50,25,0,0,1)
  MOVELINK(-50,25,0,0,1)
NEXT layer
WAIT IDLE
OP(motor,OFF)
```

See also **AXIS**, **UNIT_INIT**, **REP_OPTION**.

fig. 50

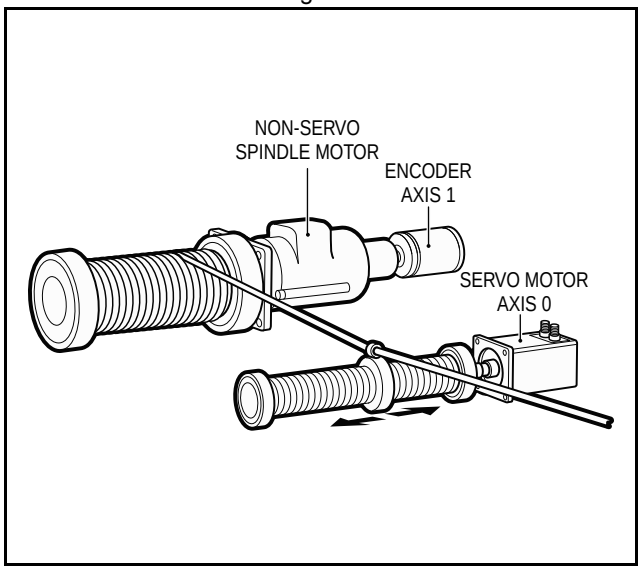

3.2.214 MOVEMODIFY

Type Axis command

Syntax **MOVEMODIFY(position)**
MM(position)

Description The **MOVEMODIFY** command changes the absolute end position of the current single-axis linear move (**MOVE**, **MOVEABS**). If there is no current move or the current move is not a linear move, then **MOVEMODIFY** is treated as a **MOVEABS** command. The **ENDMOVE** parameter will contain the position of the end of the current move in user units.
MOVEMODIFY works on the default basis axis (set with **BASE**) unless **AXIS** is used to specify a temporary base axis.

Arguments
- **position**
  The absolute position to be set as the new end of move.

fig. 51

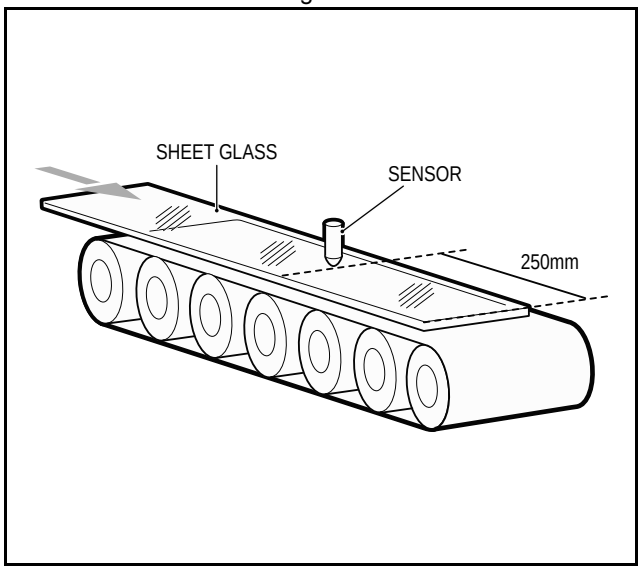

fig. 52

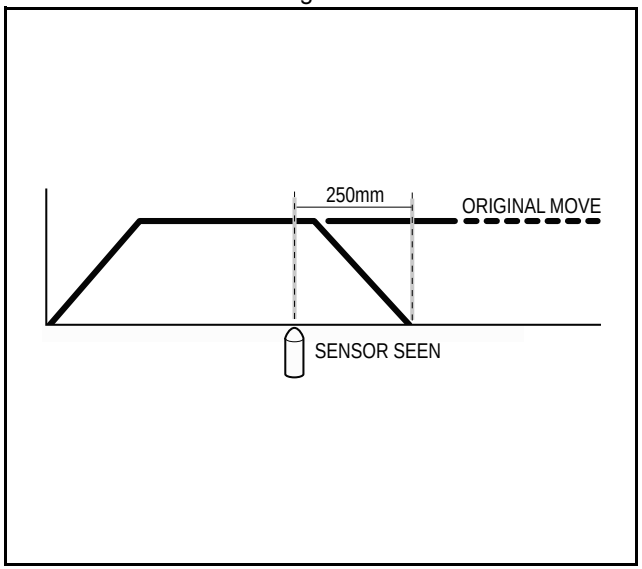

Example A sheet of glass is fed on a conveyor and is required to stop 250 mm after the leading edge is sensed by a proximity switch. The proximity switch is connected to the registration input:

```
MOVE(10000) 'Start a long move on conveyor
REGIST(3) 'set up registration
WAIT UNTIL MARK
'MARK becomes TRUE when sensor detects glass edge
OFFPOS = -REG_POS 'set position where mark was seen to 0
WAIT UNTIL OFFPOS=0 'wait for OFFPOS to take effect
MOVEMODIFY(250) 'change move to stop at 250mm
```

Example A paper feed system slips. To counteract this, a proximity sensor is positioned one third of the way into the movement. This detects at which position the paper passes, and thus how much slip has occurred. The move is then modified to account for this variation.

```
paper_length=4000
DEFPOS(0)
REGIST(3)
MOVE(paper_length)
WAIT UNTIL MARK
slip=REG_POS-(paper_length/3)
offset=slip*3
MOVEMODIFY(paper_length+offset)
```

fig. 53

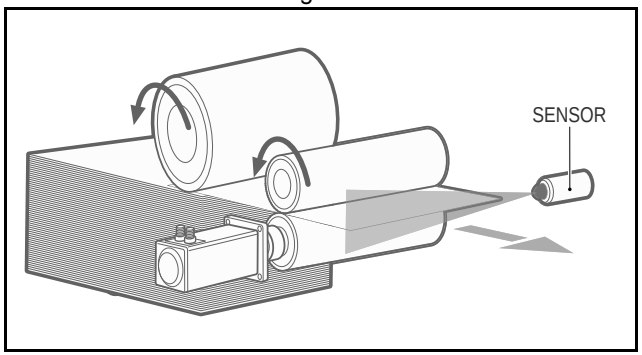

Example A satellite receiver sits on top of a van. It must align correctly to the satellite from data processed in a computer. This information is sent to the controller through the serial link and sets VR(0) and VR(1). This information is used to control the two axes.
MOVEMODIFY is used so that the position can be continuously changed even if the previous set position is not achieved.

```
bearing=0 'set lables for VRs
elevation=1
UNITS AXIS(0)=360/counts_per_rev0
UNITS AXIS(1)=360/counts_per_rev1
WHILE IN(2)=ON
  MOVEMODIFY(VR(bearing))AXIS(0) 'adjust bearing to match VR0
  MOVEMODIFY(VR(elevation))AXIS(1)'adjust elevation to match VR1
  WA(250)
WEND
RAPIDSTOP 'stop movement
WAIT IDLE AXIS(0)
MOVEABS(0) AXIS(0) 'return to transport position
WAIT IDLE AXIS(1)
MOVEABS(0) AXIS (1)
```

fig. 54

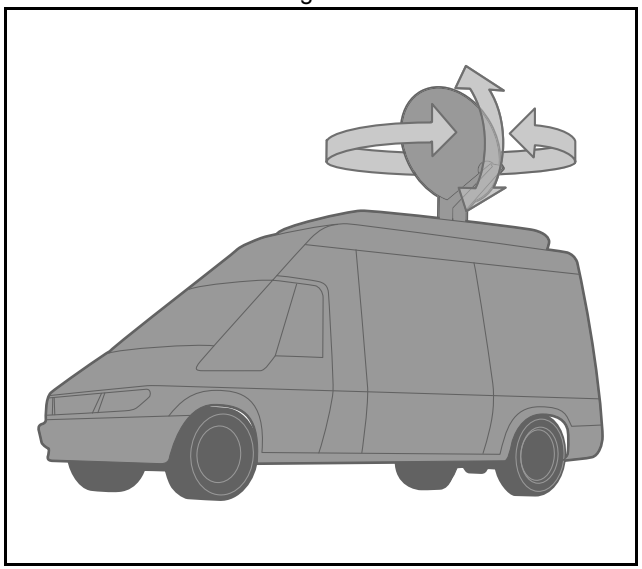

3.2.215 MOVES_BUFFERED

Type	Axis parameter (read only)
Syntax	**MOVES_BUFFERED**
Description	Returns the number of moves being buffered by the axis.
Arguments	N/A
Example	No example.
See also	**ENDMOVE_BUFFER**, **USER_FRAME**

3.2.216 MOVESP

Type	Axis command
Syntax	**MOVESP(distance_1 [, distance_2 [, distance_3 [, distance_4 [, ...]]]])**
Description	Works as **MOVE** and additionally allows vector speed to be changed when using multiple moves in the look ahead buffer when **MERGE=ON**, using additional parameters **FORCE_SPEED**, **ENDMOVE_SPEED**. When the command is loaded into the move buffer the **FORCE_SPEED** and **ENDMOVE_SPEED** parameters are copied into the buffer with the move. **FORCE_SPEED** defines the speed of the motion command. **ENDMOVE_SPEED** defines the ramp to exit speed. If two forced speed move types are merged, the speed at the merge point is controlled by the **ENDMOVE_SPEED** of the outgoing move. If a forced speed move follows one or more non-forced speed moves the deceleration will occur to the **FORCE_SPEED** of the incoming move.
Arguments	The command can take up to 64 arguments. • **distance_i** The distance to move for every axis in user units starting with the base axis.

Example In the following example the first move is finished with the speed of the first move by setting **ENDMOVE_SPEED** to the **FORCE_SPEED** of the first move.

FORCE_SPEED=500
ENDMOVE_SPEED=500
MOVESP(400)
FORCE_SPEED=1000
ENDMOVE_SPEED=0
MOVESP(400)

fig. 55

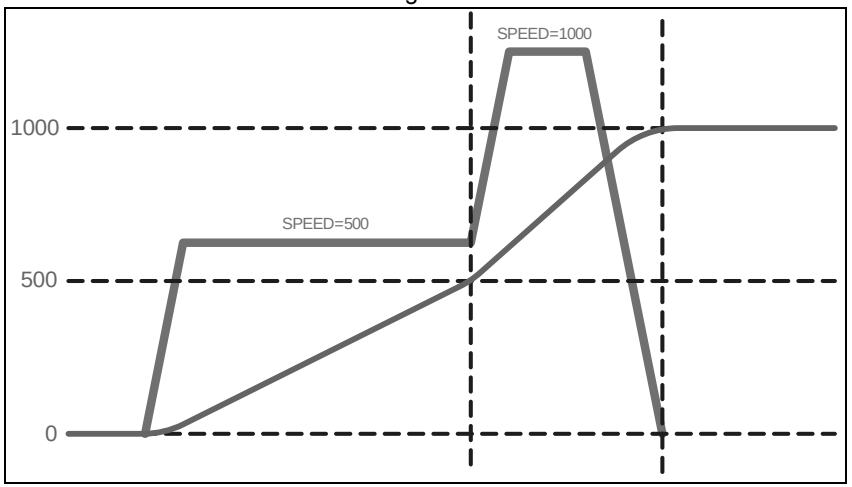

Example In the following example the first move is finished with the speed of the second move by setting **ENDMOVE_SPEED** to the **FORCE_SPEED** of the second move.

FORCE_SPEED=500
ENDMOVE_SPEED=1000
MOVESP(400)
FORCE_SPEED=1000
ENDMOVE_SPEED=0
MOVESP(400)

fig. 56

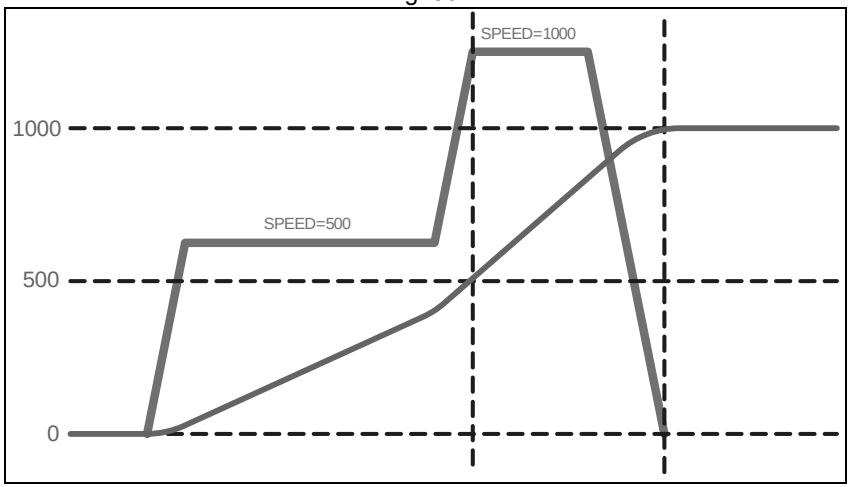

See also **MOVE**, **FORCE_SPEED**, **ENDMOVE_SPEED**

3.2.217 MOVETANG

Type: Axis command

Syntax: **MOVETANG(absolute_position [,link_axis])**

Description: In many X-Y plotting systems, there is a need to keep the stylus oriented in the direction of travel. Each combination of speeds in X and Y results in a Vector value which needs to be fed to a third axis controlling the rotation of the stylus.
Examples of machines that require such a control are; glass cutting, knife blades, powered jig-saws and “pizza wheels”.
MOVETANG Moves the axis to the required position using the programmed **SPEED**, **ACCEL** and **DECEL** for the axis. The direction of movement is determined by a calculation of the shortest path to the position assuming that the axis is rotating and that **REP_DIST** has been set to PI radians (180 degrees) and that **REP_OPTION**=0.
IMPORTANT: The **REP_DIST** value will depend on the **UNITS** value and the number of steps representing PI radians. For example if the rotary axis has 4000 pulses/turn and **UNITS**=1 the **REP_DIST** value would be 2000.
If a **MOVETANG** command is running and another **MOVETANG** is executed for the same axis, the original command will not stop, but the endpoint will become the new absolute position.

Arguments:

- **absolute_position**
  The absolute position to be set as the endpoint of the move. Value must be within the range -PI to +PI in the units of the rotary axis. For example if the rotary axis has 4000 pulses/turn, the **UNITS** value=1 and the angle required is PI/2 (90 deg) the position value would be 1000.
- **link_axis**
  An optional link axis may be specified. When a link_axis is specified the system software calculates the absolute position required each servo cycle based on the link axis **TANG_DIRECTION**. The **TANG_DIRECTION** is multiplied by the **REP_DIST**/PI to calculate the required position. Note that when using a link_axis the absolute_position parameter becomes unused. The position is copied every servo cycle until the **MOVETANG** is **CANCEL**led

Example: An X-Y positioning system has a stylus which must be turned so that it is facing in the same direction as it is travelling at all times. The XY axis pair are axes 4 and 5. The tangential stylus axis is 2:

```
BASE(0,1)
WHILE TRUE
  angle=TANG_DIRECTION
  MOVETANG(angle) AXIS(2)
  WA(1)
WEND
```

Or:

Using the **link_axis** parameter load a **MOVETANG** which remains running to automatically update the stylus position. The XY axis pair are axes 4 and 5. The tangential stylus axis is 2:

```
MOVETANG(0,4) AXIS(2)
```

See also: **TANG_DIRECTION**

3.2.218 MPOS

Type	Axis parameter (read-only)
Syntax	**MPOS**
Description	The **MPOS** parameter is the measured position of the axis in user units as derived from the encoder. This parameter can be set using the **DEFPOS** command. The **OFFPOS** axis parameter can also be used to shift the origin point. **MPOS** is reset to 0 at start-up or after the controller has been reset, except when using absolute encoders. In that case **MPOS** is initialised with the absolute position read from the encoder. The range of the measured position is controlled with the **REP_DIST** and **REP_OPTION** axis parameters.
Arguments	N/A
Example	**WAIT UNTIL MPOS >= 1250** **SPEED = 2.5**
See also	**UNIT_INIT**, **AXIS**, **DEFPOS**, **ENCODER**, **FE**, **OFFPOS**, **REP_DIST**, **REP_OPTION**

3.2.219 MSPEED

Type	Axis parameter (read-only)
Syntax	**MSPEED**
Description	The **MSPEED** parameter contains the measured speed in units/s. It is calculated by taking the change in the measured position in user units in the last servo period and divide it by the servo period (in seconds). The servo period is set with the **SERVO_PERIOD** parameter. **MSPEED** represents a snapshot of the speed and significant fluctuations, which can occur, particularly at low speeds. It can be worthwhile to average several readings if a stable value is required at low speeds.
Arguments	N/A
Example	No example.
See also	**AXIS**, **SERVO_PERIOD**, , **UNIT_INIT**.

3.2.220 MSPHERICAL

Type	Axis command
Syntax	**MSPHERICAL(end_x, end_y, end_z, mid_x, mid_y, mid_z, mode)**
Description	Moves the three axis group defined in **BASE** along a spherical path with a vector speed determined by the **SPEED** set in the X axis. There are 2 modes of operation with the option of finishing the move at an endpoint different to the start, or returning to the start point to complete a circle. The path of the movement in 3D space can be defined either by specifying a point somewhere along the path, or by specifying the centre of the sphere.
Arguments	• **end_x, end_y, end_z** **mode** = 0 or 1: Coordinates of the end point. **mode** = 2: Coordinates of a second point on the curve. • **mid_x, mid_y, mid_z** **mode** = 0 or 2: Coordinates of a point along the path of the curve. **mode** = 1 or 3: Coordinates of the sphere centre. • **mode** Specifies the way the end and mid parameters are used in calculating the curve in 3D space. 0 = specify end point and mid point on curve. 1 = specify end point and centre of sphere 2 = mid point 2 and mid point 1 are specified and the curve completes a full circle 3 = mid point on curve and centre of sphere are specified and the curve completes a full circle. Note.:The coordinates of the mid point and end point must not be co-linear. Semicircles cannot be defined by using mode 1 because the sphere centre would be co-linear with the endpoint

Example A move is needed that follows a spherical path which ends 30mm up in the Z direction:

BASE(3,4,5)
MSPHERICAL(30,0,30,8.7868,0,21.2132,0)

fig. 57

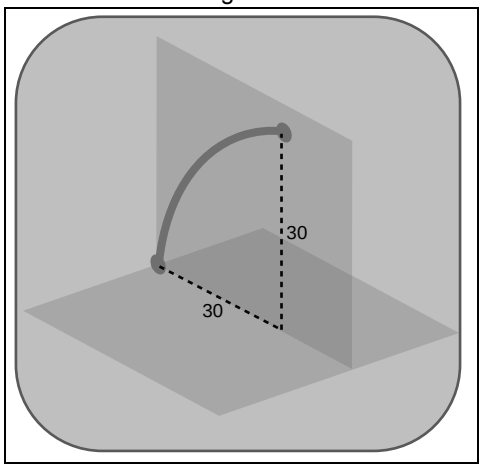

Example A similar move that follows a spherical path but at 45 degrees to the Y axis which ends 30mm above the XY plane:

BASE(0,1,2)
MSPHERICAL(21.2132,21.2132,30,6.2132,6.2132,21.2132,0)

fig. 58

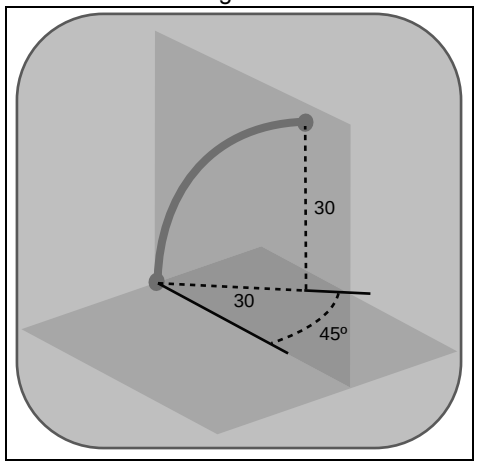

See also N/A

3.2.221 MSPHERICALSP

Type	Axis command
Syntax	**MSPHERICALSP(end_x, end_y, end_z, mid_x, mid_y, mid_z, mode)**
Description	Works as **MSPHERICAL** and additionally allows vector speed to be changed when using multiple moves in the look ahead buffer when **MERGE=ON**, using additional parameters **FORCE_SPEED**, **ENDMOVE_SPEED**. When the command is loaded into the move buffer the **FORCE_SPEED** and **ENDMOVE_SPEED** is copied into the buffer with the move. **FORCE_SPEED** defines the speed of the motion command. **ENDMOVE_SPEED** defines the ramp to exit speed. If two forced speed move types are merged, the speed at the merge point is controlled by the **ENDMOVE_SPEED** of the outgoing move. If a forced speed move follows one or more non-forced speed moves the deceleration will occur to the **FORCE_SPEED** of the incoming move.
Arguments	Refer to the **MSPHERICAL** description
Example	N/A
See also	**MSPHERICAL**, **FORCE_SPEED**, **ENDMOVE_SPEED**

3.2.222 MTYPE

Type	Axis parameter (read-only)
Syntax	**MTYPE**
Description	The **MTYPE** parameter contains the type of move currently being executed. The possible values are given in the table below.

Move number	Move type
0	**IDLE** (no move)
1	**MOVE**
2	**MOVEABS**
3	**MHELICAL**
4	**MOVECIRC**
5	**MOVEMODIFY**
6	**MOVESP**
7	**MOVEABSSP**
8	**MOVECIRCSP**
9	**MHELICALSP**
10	**FORWARD**
11	**REVERSE**
12	**DATUM**
13	**CAM**
14	JOG_FORWARD refer to **FWD_JOG**
15	JOG_REVERSE refer to **REV_JOG**
20	**CAMBOX**
21	**CONNECT**
22	**MOVELINK**
30	**MOVETANG**
31	**MSPHERICAL**
40	**MSPHERICALSP**

MTYPE can be used to determine whether a move has finished or if a transition from one move type to another has taken place.
A non-idle move type does not necessarily mean that the axis is actually moving. It can be at 0 speed part way along a move or interpolating with another axis without moving itself.

Arguments	N/A
Example	No example.
See also	**AXIS**, **NTYPE**.

3.2.223 N_ANA_IN

Type	System parameter (read-only)
Syntax	**N_ANA_IN**
Description	This parameter returns the number of analogue input channels connected on the MECHATROLINK-II or EtherCAT network. For example a TJ2-MC__ will return 8 if there are 2 x AN2900 Units connected as each has 4 analogue input channels.
Arguments	N/A
Example	No example.
See also	N/A

3.2.224 N_ANA_OUT

Type	System parameter (read-only)
Syntax	**N_ANA_OUT**
Description	This parameter returns the number of analogue output channels connected on the MECHATROLINK-II EtherCAT network. For example a TJ2-MC__ will return 4 if there are 2 x AN2910 Units connected as each has 4 analogue input channels.
Arguments	N/A
Example	No example.
See also	N/A

3.2.225 NEG_OFFSET

Type	System parameter
Syntax	**NEG_OFFSET=value**
Description	For Piezo Operation. This allows a negative offset to be applied to the output **DAC** signal from the servo loop. The offset is applied after the **DAC_SCALE** function. An offset of 327 will represent an offset of 0.1 volts. It is suggested that as offset of 65% to 70% of the value required to make the stage move in an open loop situation is used.
Arguments	• **value** A BASIC expression.
Example	No example.
See also	N/A

3.2.226 NEW

Type	Program command
Syntax	**NEW ["program_name"]**
Description	The **NEW** command deletes all program lines of the program in the controller. **NEW** without a program name can be used to delete the currently selected program (using **SELECT**). The program name can also be specified without quotes. **NEW ALL** will delete all programs. The command can also be used to delete the TABLE memory. **NEW "TABLE"** The name **"TABLE"** must be in quotes. Note: This command is implemented for a Command Line Terminal. Within Trajexia Studio users can select the command from the Program menu.
Arguments	N/A
Example	No example.
See also	**COPY**, **DEL**, **RENAME**, **SELECT**, **TABLE**

3.2.227 NEXT

See **FOR..TO..STEP..NEXT**.

3.2.228 NIN

Type System parameter

Syntax **NIN**

Description Returns the number of inputs fitted to the system, or connected on the MECHATROLINK-II or EtherCAT network. A TJ2-MC__ with no MECHATROLINK-II or EtherCAT I/O will return **NIO=32**. The built-in inputs are channels 0 to 15. Channels 16 to 27 can be used as “virtual” I/Os which are connected together. Input channels 28 to 31 are reserved to allow each axis to use the MECHATROLINK-II and EtherCAT Drive input channels for axis control functions.
Note
- A TJ2-ECT__ unit adds 8 inputs, which reflects the status of the 8 registration inputs on the unit.
- A TJ2-KS02 adds 8 inputs, of which the first 2 inputs reflect the status of the 2 registration inputs.

Arguments N/A

Example No example.

See also **NIO**, **NOP**

3.2.229 NIO

Type System parameter

Syntax **NIO**

Description Returns the number of inputs/outputs fitted to the system, or connected on the MECHATROLINK-II or EtherCAT network. A TJ2-MC__ with no MECHATROLINK-II or EtherCAT I/O will return **NIO=32**. The built-in inputs are channels 0 to 15. The built-in outputs are channels 8 to 15. Channels 16 to 27 can be used as “virtual” I/Os which are connected together. Input channels 28 to 31 are reserved to allow each axis to use the MECHATROLINK-II and EtherCAT Drive input channels for axis control functions.
NIO is defined as the maximum of the **NIN** and **NOP** parameters.

Arguments N/A

Example No example.

See also **NOP**, **NIN**

3.2.230 NOP

Type System parameter

Syntax **NOP**

Description Returns the number of outputs fitted to the system, or connected on the MECHATROLINK-II or EtherCAT network. A TJ2-MC__ with no MECHATROLINK-II or EtherCAT I/O will return **NOP=32**. The built-in outputs are channels 8 to 15. Channels 16 to 27 can be used as “virtual” I/Os which are connected together.

Arguments N/A

Example No example.

See also **NIN**, **NIO**

3.2.231 NOT

Type Mathematical operation

Syntax **NOT expression**

Description The **NOT** operator performs the logical **NOT** function on all bits of the integer part of the expression.
The logical **NOT** function is defined as in the table below.

Bit	Result
0	1
1	0

Arguments
- **expression.**
  Any valid BASIC expression.

Example
>> PRINT 7 AND NOT 1
6.0000

See also N/A

3.2.232 NTYPE

Type Axis parameter (read-only)

Syntax **NTYPE**

Description The **NTYPE** parameter contains the type of the move in the next move buffer. Once the current move has finished, the move present in the **NTYPE** buffer will be executed. The values are the same as those for the **MTYPE** axis parameter.
NTYPE is cleared by the **CANCEL(1)** command.

Arguments N/A

Example No example.

See also **AXIS**, **MTYPE**.

3.2.233 OFF

Type Constant (read-only)

Syntax **OFF**

Description The **OFF** constant returns the numerical value 0.

Arguments N/A

Example **OP (lever,OFF)**
The above line sets the output named lever to OFF.

See also N/A

3.2.234 OFFPOS

Type Axis parameter

Syntax **OFFPOS**

Description The **OFFPOS** parameter contains an offset that will be applied to the demand position (**DPOS**) without affecting the move which is in progress in any other way. The measured position will be changed accordingly in order to keep the Following Error. OFFPOS can therefore be used to effectively datum a system at full speed. The value set in **OFFPOS** will be reset to 0 by the system as the offset is loaded.
Note: The offset is applied on the next servo period. Other commands may be executed prior to the next servo period. Be sure that these commands do not assume the position shift has occurred. This can be done by using the **WAIT UNTIL** statement (see example).

Arguments N/A

Example Change the current position by 125, with the Command Line Terminal:
>>?DPOS
300.0000
>>OFFPOS=125
>>?DPOS
425.0000

Example Define the current demand position as 0
OFFPOS=-DPOS
WAIT UNTIL OFFPOS=0 ' wait until applied
This is equivalent to **DEFPOS(0)**.

Example A conveyor transports boxes. Labels must be applied onto these boxes. The **REGIST** function can capture the position at which the leading edge of the box is seen. Then, the **OFFPOS** command can adjust the measured position of the axis to make it 0 at that point. Thus, after the registration event has occurred, the measured position (seen in **MPOS**) reflects the absolute distance from the start of the box. The mechanism that applies the label can take advantage of the absolute position start mode of the **MOVELINK** or **CAMBOX** commands to apply the label.

```
BASE(conv)
REGIST(3)
WAIT UNTIL MARK
OFFPOS = -REG_POS ' Leading edge of box is now zero
```

See also **AXIS**, **DEFPOS**, **DPOS**, **MPOS**, **UNIT_INIT**.

fig. 59

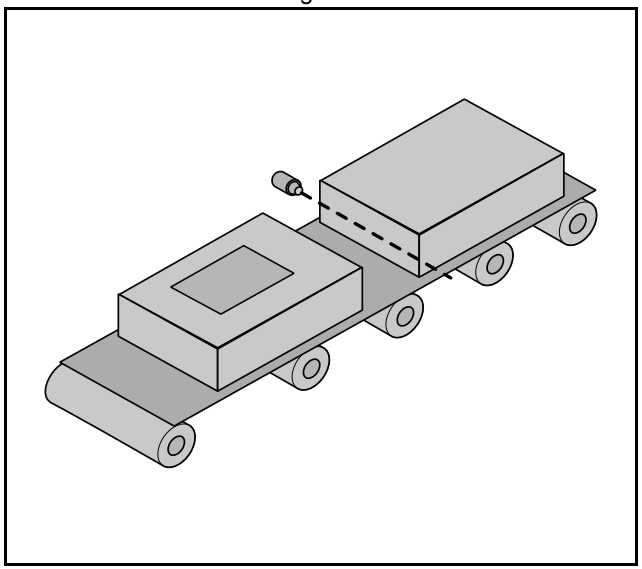

3.2.235 ON

Type Constant (read-only)

Syntax **ON**

Description The **ON** constant returns the numerical value 1.

Arguments N/A

Example **OP (lever,ON)**
The above line sets the output named lever to **ON**.

See also N/A

3.2.236 ON.. GOSUB

Type Program control command

Syntax **ON expression GOSUB label [,label[,...]]**

Description The **ON..GOSUB** and **ON..GOTO** structures enable a conditional jump. The integer expression is used to select a label from the list. If the expression has value 1 the first label is used, for value 2 the second label is used, and so on. Once the label is selected, subroutine **GOSUB** jump to that label is performed. Note: If the expression is not valid e.g. the result of the expression is less than 1 or greater that the number of available labels in the program, no jump is performed.

Arguments
- **expression**
  Any valid BASIC expression.
- **label**
  Any valid label in the program.

Example
```
REPEAT
  GET#5,char
UNTIL 1<=char and char<=3
ON char GOSUB mover, stopper, change
```

See also **GOSUB..RETURN**, **GOTO**.

3.2.237 ON.. GOTO

Type Program control command

Syntax **ON expression GOTO label [,label[,...]]**

Description The expression is evaluated and then the integer part is used to select a label from the list. If the expression has the value 1 then the first label is used, 2 then the second label is used, and so on. If the value of the expression is less than 1 or greater than the number of labels then an error occurs. Once the label is selected, subroutine **GOTO** jump to that label is performed.

Arguments
- **expression**
  Any valid BASIC expression.
- **label**
  Any valid label in the program.

Example
```
REPEAT
  GET #1,char
UNTIL 1<=char and char<=3
ON char GOTO mover,stopper,change
```

See also N/A

3.2.238 OP

Type I/O command

Syntax **OP(output_number, value)**
OP(binary_pattern)
OP

Description The **OP** command sets one or more outputs or returns the state of the first 32 outputs. **OP** has three different forms depending on the number of arguments.
- Command **OP(output_number,value)** sets a single output channel. The range of **output_number** depends on the number of additional digital I/O connected over the MECHATROLINK-II or EtherCAT network and **value** is the value to be output, either 0 or 1.
- Command **OP(binary_pattern)** sets the binary pattern to the 32 outputs according to the value set by **binary_pattern**.
- Function **OP (without arguments)** returns the status of the first 32 outputs. This allows multiple outputs to be set without corrupting others which are not to be changed.

Note: The first 8 outputs (0 to 7) do not physically exist on the TJ2-MC__. They can not be written to and will always return 0.

Arguments
- **output_number**
  The number of the output to be set. The range for this parameter depends on the number of additional digital I/O connected over the MECHATROLINK-II or EtherCAT network. If there are no digital I/O connected, the range for this parameter is 8..31
- **value**
  The value to be output, either OFF (0) or ON (1). All non-0 values are considered as ON.
- **binary_pattern**
  The integer equivalent of the binary pattern is to be output.

Example
```
OP(12,1)
OP(12,ON)
```
These two lines are equivalent.

Example **OP(18*256)**
This line sets the bit pattern 10010 on the first 5 physical outputs, outputs 13 to 17 would be cleared. The bit pattern is shifted 8 bits by multiplying by 256 to set the first available outputs as outputs 0 to 7 do not exist.

Example **VR(0) = OP**
VR(0) = VR(0) AND 65280
OP(VR(0))
This routine sets outputs 8 to 15 **ON** and all others off.
The above programming can also be written as follows:
OP(OP AND 65280)

Example **val = 8 ' The value to set**
mask = OP AND NOT(15*256) ' Get current status and mask
OP(mask OR val*256) ' Set val to OP(8) to OP(11)
This routine sets value **val** to outputs 8 to 11 without affecting the other outputs by using masking.

See also **IN**.

3.2.239 OPEN_WIN

Type Axis parameter

Syntax **OPEN_WIN**
OW

Description The **OPEN_WIN** parameter defines the beginning of the window inside or outside which a registration event is expected. The value is in user units.
Note: **OPEN_WIN** must be the numerically smaller than **CLOSE_WIN**

Arguments N/A

Example **only look for registration marks between 170 and 230**
OPEN_WIN = 170
CLOSE_WIN = 230
REGIST(256+3)
WAIT UNTIL MARK

See also **CLOSE_WIN**, **REGIST**, **UNIT_INIT**.

3.2.240 OR

Type Mathematical operation

Syntax **expression1 OR expression2**

Description The **OR** operator performs the logical **OR** function between corresponding bits of the integer parts of two valid BASIC expressions.
The logical **OR** function between two bits is defined as in the table below.

Bit 1	Bit 2	Result
0	0	0
0	1	1
1	0	1
1	1	1

Arguments
- **expression1**
  Any valid BASIC expression.
- **expression2**
  Any valid BASIC expression.

Example **result = 10 OR (2.1*9)**
The parentheses are evaluated first, but only the integer part of the result, 18, is used for the operation. Therefore, this expression is equivalent to the following:
result = 10 OR 18
The **OR** is a bit operator and so the binary action taking place is:
01010 OR 10010 = 11010
Therefore, result will contain the value 26.

Example **IF KEY OR VR(0) = 2 THEN GOTO label**

See also N/A

3.2.241 OUTDEVICE

Type Communication parameter

Syntax **OUTDEVICE**

Description The **OUTDEVICE** parameter defines the default output device. This device will be selected for the **PRINT** command when the **#n** option is omitted. The **OUTDEVICE** parameter is task specific. The supported values are listed in the table below.

Value	Description
0	Programming port 0 (default)
1	RS-232C serial port 1
2	RS-422A/485 serial port 2
5	Trajexia Studio port 0 user channel 5
6	Trajexia Studio port 0 user channel 6
7	Trajexia Studio port 0 user channel 7

Arguments N/A

Example No example.

See also **PRINT**, **INDEVICE**.

3.2.242 OUTLIMIT

Type Axis parameter

Syntax **OUTLIMIT**

Description The output limit restricts the demand output from a servo axis to a lower value than the maximum. The value required varies depending on the maximum demand output possible. If the voltage output is generated by a 16 bit DAC values an **OUTLIMIT** of 32767 will produce the full +/-10v range. A MECHATROLINK-II or EtherCAT speed axis has a 32 bit maximum demand.
Note: **OUTLIMIT** only makes sense for Axis types using speed reference.

Arguments N/A

Example **OUTLIMIT AXIS(1) = 16384**
The above will limit the voltage output to a +/-5V output range from the TJ1-FL02 unit. This will apply to the DAC command if SERVO=OFF, or to the voltage output by the servo loop if SERVO=ON.

See also **AXIS**, **S_REF**, **S_REF_OUT**, **SERVO**.

3.2.243 OV_GAIN

Type Axis parameter

Syntax **OV_GAIN**

Description The **OV_GAIN** parameter contains the output velocity gain. The output velocity output contribution is calculated by multiplying the change in measured position with the **OV_GAIN** parameter value. The default value is 0.
Adding NEGATIVE output velocity gain to a system is mechanically equivalent to adding damping. It is likely to produce a smoother response and allow the use of a higher proportional gain than could otherwise be used, but at the expense of higher Following Errors. High values may cause oscillation and produce high Following Errors.
Note: Negative values are normally required for OV_GAIN.
Note: In order to avoid any instability the servo gains should be changed only when the **SERVO** is off.

Arguments N/A

Example No example.

See also **D_GAIN**, **I_GAIN**, **P_GAIN**, **VFF_GAIN**.

3.2.244 P_GAIN

Type	Axis parameter
Syntax	**P_GAIN**
Description	The **P_GAIN** parameter contains the proportional gain. The proportional output contribution is calculated by multiplying the Following Error with the **P_GAIN** parameter value. The default value of **P_GAIN** for MECHATROLINK-II Speed axis (**ATYPE = 41**) is 131072. The default value for Flexible axis Servo (**ATYPE = 44**) is 1.0. The proportional gain sets the stiffness of the servo response. Values that are too high will cause oscillation. Values that are too low will cause large Following Errors. Note: In order to avoid any instability the servo gains should be changed only when the **SERVO** is off.
Arguments	N/A
Example	No example.
See also	**D_GAIN**, **I_GAIN**, **OV_GAIN**, **VFF_GAIN**.

3.2.245 PI

Type	Constant (read-only)
Syntax	**PI**
Description	The **PI** constant returns the numerical constant value of approximately 3.14159.
Arguments	N/A
Example	**circum = 100** **PRINT "Radius = "; circum/(2*PI)**
See also	N/A

3.2.246 PMOVE

Type	Task parameter (read-only)
Syntax	**PMOVE**
Description	The **PMOVE** parameter contains the status of the task buffers. The parameter returns **TRUE** if the task buffers are occupied, and **FALSE** if they are empty. When the task executes a movement command, the task loads the movement information into the task move buffers. The buffers can hold one movement instruction for any group of axes. **PMOVE** will be set to **TRUE** when loading of the buffers has been completed. When the next servo interrupt occurs, the motion generator loads the movement into the next move (**NTYPE**) buffer of the required axes if they are available. When this second transfer has been completed, **PMOVE** is cleared to 0 until another move is executed in the task. Each task has its own **PMOVE** parameter. Use the **PROC** modifier to access the parameter for a certain task. Without **PROC** the current task will be assumed.
Arguments	N/A
Example	No example.
See also	**NTYPE**, **PROC**.

3.2.247 POS_OFFSET

Type	System parameter
Syntax	**POS_OFFSET=value**
Description	For Piezo Operation. This keyword allows a positive offset to be applied to the output **DAC** signal from the servo loop. The offset is applied after the **DAC_SCALE** function. An offset of 327 will represent an offset of 0.1 volts for axis with servo output generated by a 16 bit DAC. It is suggested that as offset of 65% to 70% of the value required to make the stage move in an open loop situation is used.
Arguments	N/A
Example	No example.
See also	N/A

3.2.248 PRINT

Type: Communication command

Syntax: **PRINT [#n,] expression { , expression}**
? [#n,] expression { , expression }

Description: The **PRINT** command outputs a series of characters to the communication ports. **PRINT** can output parameters, fixed ASCII strings, and single ASCII characters. By using **PRINT #n**, any port can be selected to output the information to.
Multiple items to be printed can be put on the same line separated by a comma or a semi-colon. A comma separator in the print command places a tab between the printed items. The semi-colon separator prints the next item without any spaces between printed items.
The width of the field in which a number is printed can be set with the use of [w,x] after the number to be printed. The width of the column is given by w and the number of decimal places is given by x. Using only one parameter [x] takes the default width and specifies the number of decimal places to be printed. The numbers are right aligned in the field with any unused leading characters being filled with spaces. If the number is too long, then the field will be filled with asterisks to signify that there was not sufficient space to display the number. The maximum field width allowable is 127 characters.
The backslash \ command can be used to print a single ASCII character.

Arguments:
- **n**
  The specified output device. When this argument is omitted, the port as specified by **OUTDEVICE** will be used. See the table below.
- **expression**
  The expression to be printed.

Value	Description
0	Programming port 0 (default)
1	RS-232C serial port 1
2	RS-422A/485 serial port 2
5	Trajexia Studio port 0 user channel 5
6	Trajexia Studio port 0 user channel 6
7	Trajexia Studio port 0 user channel 7

Example: **PRINT "CAPITALS and lower case CAN BE PRINTED"**

Example: Consider VR(1) = 6 and **variab** = 1.5, the print output will be as follows:
PRINT 123.45, VR(1)-variab
123.4500 4.5000

Example: **length:**
PRINT "DISTANCE = ";mpos
DISTANCE = 123.0000
In this example, the semi-colon separator is used. This does not tab into the next column, allowing the programmer more freedom in where the print items are placed.

Example: **PRINT VR(1)[4,1]; variab[6,2]**
6.0 1.50

Example: **params:**
PRINT "DISTANCE = ";mpos[0];" SPEED = ";v[2];
DISTANCE = 123 SPEED = 12.34

Example: **PRINT "ITEM ";total" OF ";limit;CHR(13);**

Example: **>> PRINT HEX(15),HEX(-2)**
F 1FFFFFFFFFFFFE

See also: **$ (HEXADECIMAL INPUT)**, **OUTDEVICE**.

3.2.249 PROC

Type	Task command
Syntax	**PROC(task_number)**
Description	The **PROC** modifier allows a process parameter from a particular process to be read or written. If omitted, the current task will be assumed.
Arguments	• **task_number** The number of the task to access.
Example	**WAIT UNTIL PMOVE PROC(3)=0**
See also	N/A

3.2.250 PROC_STATUS

Type	Task parameter
Syntax	**PROC_STATUS**
Description	The **PROC_STATUS** parameter returns the status of the process or task specified. The parameter is used with the **PROC** modifier and can return values listed in the table below.

Value	Description
0	Process stopped
1	Process running
2	Process stepping
3	Process paused

Arguments	N/A
Example	**WAIT UNTIL PROC_STATUS PROC(3)=0**
See also	**PROCNUMBER**, **PROC**.

3.2.251 PROCESS

Type	Program command
Syntax	**PROCESS**
Description	The **PROCESS** command displays the running status of all current tasks with their task number.
Arguments	N/A
Example	No example.
See also	**HALT**, **RUN**, **STOP**.

3.2.252 PROCNUMBER

Type	Task parameter (read-only)
Syntax	**PROCNUMBER**
Description	The **PROCNUMBER** parameter contains the number of the task in which the currently selected program is running. **PROCNUMBER** is often required when multiple copies of a program are running on different tasks.
Arguments	N/A
Example	**MOVE(length) AXIS(PROCNUMBER)**
See also	**PROC_STATUS**, **PROC**.

3.2.253 PROFIBUS

Type	System command
Syntax	**PROFIBUS(unit_number, 2,1,VR_start_outputs,no_outputs, VR_start_inputs,no_inputs)** **PROFIBUS(unit_number,4,0)**

Description **PROFIBUS** function 2 configures the TJ1-PRT for data exchange with the PROFIBUS-DP master unit and defines areas in the VR memory where I/O exchange takes place. **PROFIBUS** function 4 returns the data exchange status of the TJ1-PRT. Refer to the table below for the description of the bits in the data exchange status word.

Bit	Value	Description
0	0	Failed configuration of I/O data exchange
	1	I/O data exchange configured successfully
1	0	I/O data not available
	1	I/O data available
2	0	Data exchange active in OPERATE mode
	1	Data exchange active in CLEAR mode

Arguments
- **unit_number**
  Specifies the unit number of the TJ1-PRT in the Trajexia system.
- **VR_start_outputs**
  The starting address in VR memory of the controller where the output data from the PROFIBUS-DP master is located.
- **no_outputs**
  The number of output words from the PROFIBUS-DP master in VR memory.
- **VR_start_inputs**
  The starting address in VR memory of the controller where the input data for the PROFIBUS-DP master is located.
- **no_inputs**
  The number of input words to the PROFIBUS-DP master in VR memory.

Example **PROFIBUS (0,2,1,10,16,150,31)**
In this example, the TJ1-PRT is configured to exchange data with PROFIBUS-DP master with 16 output words (received from the master) located at VR(10) to VR(25), and 31 input words (sent to the master) located at VR(150) to VR(180).

See also N/A

3.2.254 PSWITCH

Type I/O command

Syntax **PSWITCH(switch, enable [, axis, output_number, output_state, set_position, reset_position])**

Description The **PSWITCH** command turns on an output when a predefined position is reached, and turns off the output when a second position is reached. The positions are specified as the measured absolute positions.
There are 16 position switches each of which can be assigned to any axis. Each switch has assigned its own ON and OFF positions and output number. The command can be used with 2 or all 7 arguments. With only 2 arguments a given switch can be disabled.
PSWITCHs are calculated on each servo cycle and the output result applied to the hardware. The response time is therefore 1 servo cycle period approximately.
Note: An output may remain ON if it was ON when the **PSWITCH** was disabled. In such cases the **OP** command can be used to turn off an output as follows:
PSWITCH(2,OFF):OP(14,OFF) ' Turn OFF pswitch controlling OP 14
Note: The physical switches that are used with **PSWITCH** are not fast hardware switches, so switching is done by software, which can introduce some small delays in operation. Fast hardware switching can be used only with axes connected via the TJ1-FL02. Use the **HW_PSWITCH** command.

Arguments
- **switch**
  The switch number. Range: [0,15].
- **enable**
  The switch enable. Range: [on, off].
- **axis**
  The number of the axis providing the position input.
- **output_number**
  The physical output to set (from 8), including remote outputs
- **output_state**
  The state to output. Range: [on, off].
- **set_position**
  The absolute position in user units at which output is set.
- **reset_position**
  The absolute position in user units at which output is reset.

Example

A rotating shaft has a cam operated switch which has to be changed for different size work pieces. There is also a proximity switch on the shaft to indicate the TDC of the machine. With a mechanical cam, the change from job to job is time consuming. This can be eased by using PSWITCH as a software cam switch. The proximity switch is wired to input 7 and the output is output 11. The shaft is controlled by axis 0. The motor has a 900ppr encoder. The output must be on from 80 units.

PSWITCH uses the unit conversion factor to allow the positions to be set in convenient units. First the unit conversion factor must be calculated and set. Each pulse on an encoder gives four edges for the TJ2-MC__ to count. There are thus 3,600 edges/rev or 10 edges/degree. If you set the unit conversion factor to 10, you can work in degrees.

Next you have to determine a value for all the **PSWITCH** arguments.

sw:The switch number can be any switch that is not in use. In this example, you will use number 0.

en: The switch must be enabled to work; set the enable to **ON**.

axis: The shaft is controlled by axis 0.

opno: The output being controlled is output 11.

opst: The output must be on so set to **ON**.

setpos: The output is to produced at 80 units.

rspos: The output is to be on for a period of 120 units.

This can all be put together in the following lines of BASIC code:

```
switch:
  UNITS AXIS(0) = 10 ' Set unit conversion factor
  REP_DIST = 360
  REP_OPTION = ON
  PSWITCH(0,ON,0,11,ON,80,200)
```

This program uses the repeat distance set to 360 degrees and the repeat option on so that the axis position will be maintained between 0 and 360 degrees.

See also **HW_PSWITCH**, **OP**, **UNIT_INIT**.

3.2.255 R_MARK

Type: Axis parameter (read-only)

Syntax: **R_MARK(channel)**

Description: The **R_MARK(channel)** is set to FALSE when the **R_REGIST(channel)** command has been executed and is set to TRUE when the registration event for that channel occurs. Only when this parameter is TRUE, the **R_REGPOS(channel)** value is valid.

Arguments:

- **channel**
  Registration input number of the TJ2-ECT__

Example: N/A

See also: **R_REGIST**

3.2.256 R_REGIST

Type: Axis command

Syntax: **R_REGIST(channel, edge, window)**

Description: The **R_REGIST** command sets up the operation of the registration inputs of a TJ2-ECT__. The command captures an axis position when a registration signal is detected. The TJ2-ECT__ supports up to 8 registration inputs (channels). Each channel can be assigned to only one axis. The selected axis must be attached to the TJ2-ECT__ of that channel.

When a registration event has occurred, the **R_MARK(channel)** parameter is set to ON, the position is stored in the **R_REGPOS(channel)** axis parameter and the speed is stored in the **R_REGISTSPEED(channel)** axis parameter.

Arguments
- **channel**
  Registration input number of the TJ2-ECT__
- **edge**
  0 = Rising edge.
  1 = Falling edge
- **window**
  0 = No windowing.
  1 = Inclusive windowing (position inside **OPEN_WIN**...**CLOSE_WIN**)
  2 = Exclusive windowing (position outside **OPEN_WIN**...**CLOSE_WIN**)

Example
Assign registration input 1 to EtherCAT axis 2, with rising edge detection and no windowing:
R_REGIST(1,0,0) AXIS(2)

Assigning the same input to more than 1 axis will cancel the previous assignments for that input:
R_REGIST(1,0,0) AXIS(2)
R_REGIST(1,0,0) AXIS(3)
This will assign registration of input 1 to axis 3

See also **REGIST**

3.2.257 R_REGISTSPEED

Type Axis parameter (read-only)

Syntax **R_REGISTSPEED(channel)**

Description The **R_REGISTSPEED(channel)** parameter stores the speed at the time the registration event for the selected channel occurred.

Arguments
- **channel**
  Registration input number of the TJ2-ECT__

Example N/A

See also **R_REGIST**

3.2.258 R_REGPOS

Type Axis parameter (read-only)

Syntax **R_REGPOS(channel)**

Description The **R_REGPOS(channel)** parameter stores the position in user units at which the primary registration event occurred.

Arguments
- **channel**
  Registration input number of the TJ2-ECT__

Example N/A

See also **R_REGIST**

3.2.259 RAISE_ANGLE

Type Axis parameter

Syntax **RAISE_ANGLE**

Description Used to define the angle change in radians above which an X-Y system will interact with a BASIC program to allow for a large change in direction on a tangential axis. **RAISE_ANGLE** does not control speed directly so should be greater than or equal to **STOP_ANGLE**. When a change in direction in a sequence of **MOVESP**/**MOVEABSSP**/**MOVECIRCSP** moves exceeds **RAISE_ANGLE** the system will set axis parameter **CORNER_STATE** according to the following sequence:
1 - System sets **CORNER_STATE** to 1 to indicate move ready to be loaded with large angle change.
2 - BASIC program raises knife.
3 - BASIC program sets **CORNER_STATE** to 3.
4 - System will load following move but with speed overridden to zero. This allows the direction to be obtained from **TANG_DIRECTION**.
5 - BASIC program orients knife possibly using **MOVE_TANG**.
6 - BASIC program clears **CORNER_STATE** to 0.
7 - System will ramp up speed to perform the next move.

fig. 60

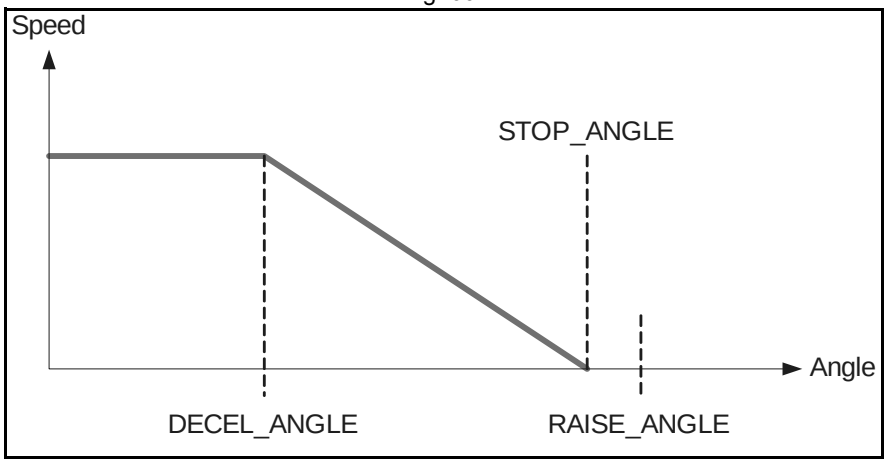

Arguments N/A

Example **' Raise knife above 25 deg (0.4363 rad)**
RAISE_ANGLE = 0.4363

See also **CORNER_MODE**, **CORNER_STATE**

3.2.260 RAPIDSTOP

Type	Axis command
Syntax	**RAPIDSTOP**
Description	The **RAPIDSTOP** command cancels the current move on all axes from the current move buffer (**MTYPE**). Moves for speed profiled move commands (**MOVE**, **MOVEABS**, **MOVEMODIFY**, **FORWARD**, **REVERSE**, **MOVECIRC** and **MHELICAL**) will decelerate to a stop with the deceleration rate as set by the **DECEL** parameter. Moves for other commands will be immediately stopped. Notes: • **RAPIDSTOP** cancels only the presently executing moves. If further moves are buffered in the next move buffers (**NTYPE**), look ahead buffer or the task buffers they will then be loaded. • **RAPIDSTOP(2)** cancels all executing and buffered moves. • During the deceleration of the current moves additional **RAPIDSTOP**s will be ignored.
Arguments	N/A

Example

This example shows the implementation of a stop override button that cuts out all motion.

```
CONNECT (1,0) AXIS(1) 'axis 1 follows axis 0
BASE(0)
REPEAT
MOVE(1000) AXIS (0)
MOVE(-100000) AXIS (0)
MOVE(100000) AXIS (0)
UNTIL IN (2)=OFF 'stop button pressed?
RAPIDSTOP
WA(10) 'wait to allow running move to cancel
RAPIDSTOP 'cancel the second buffered move
WA(10)
RAPIDSTOP 'cancel the third buffered move
```

fig. 61

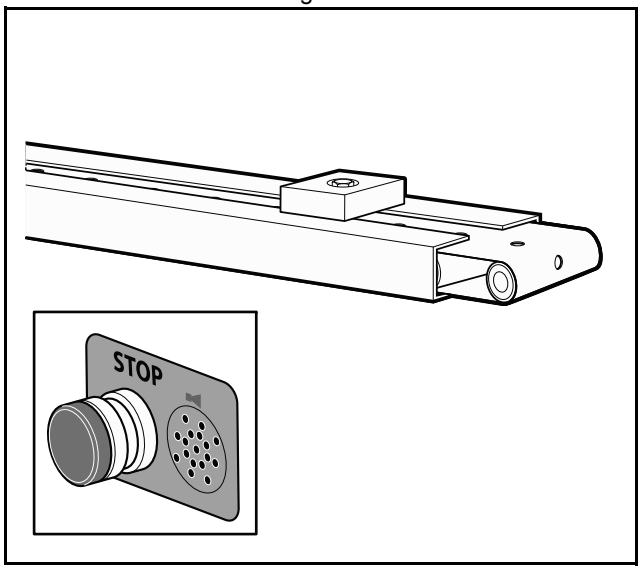

Example This example shows the use of **RAPIDSTOP** to cancel a **MOVE** on the main axis and a **FORWARD** on the second axis. When the axes have stopped, a **MOVEABS** is applied to re-position the main axis.

```
BASE(0)
REGIST(3)
FORWARD AXIS(1)
MOVE (100000) 'apply a long move
WAIT UNTIL MARK
RAPIDSTOP
WAIT IDLE 'for MOVEABS to be accurate, the axis must stop
MOVEABS(3000)
```

fig. 62

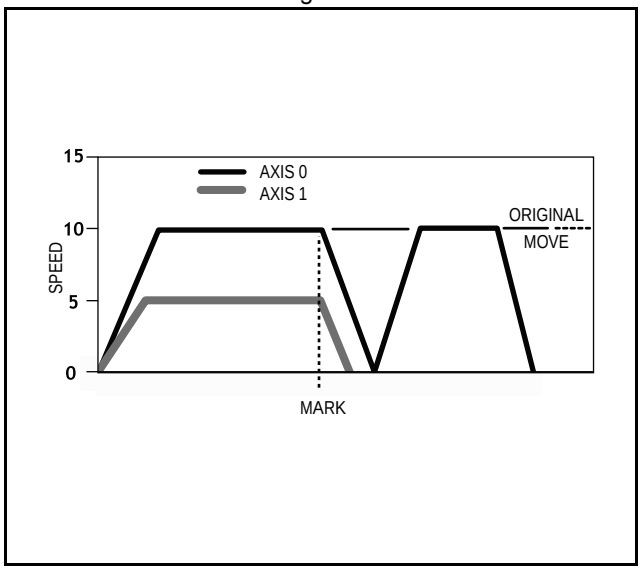

Example This example shows the use of **RAPIDSTOP** to break a **CONNECT** and stop the motion. The connected axis stops immediately on the **RAPIDSTOP** command. The forward axis decelerates at the **DECEL** value.

```
BASE(0)
CONNECT(1,1)
FORWARD AXIS(1)
WAIT UNTIL VPSPEED=SPEED 'let the axis get to full speed
WA(1000)
RAPIDSTOP
WAIT IDLE AXIS(1) 'wait for axis 1 to decel
CONNECT(1,1) 're-connect axis 0
REVERSE AXIS(1)
WAIT UNTIL VPSPEED=SPEED
WA(1000)
RAPIDSTOP
WAIT IDLE AXIS(1)
```

fig. 63

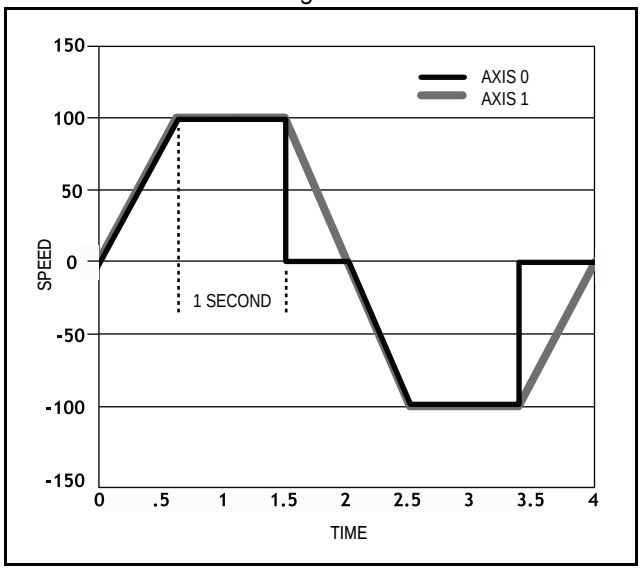

See also **CANCEL**, **MTYPE**, **NTYPE**.

3.2.261 READ_BIT

Type	System command
Syntax	**READ_BIT(bit_number, vr_number)**
Description	The **READ_BIT** command returns the value of the specified bit in the specified VR variable, either 0 or 1.
Arguments	• **bit_number** The number of the bit to be read. Range: [0,52]. • **vr_number** The number of the VR variable for which the bit is read. Range: [0,64999].
Example	No example.
See also	**CLEAR_BIT**, **SET_BIT**.

3.2.262 READ_OP

Type	I/O command
Syntax	**READ_OP(output_no)** **READ_OP(first_output_no, last_output_no)**
Description	**READ_OP(output_no)**, returns the binary value (0 or 1) of the digital output **output_no**. **READ_OP(first_output_no, last_output_no)**, returns the number that is the decimal representation of the concatenation of the binary values of the range **first_output_no** to **final_output_no**. Note: The difference between **first_output_no** and **last_output_no** must be less than 32. Note: Outputs 0 to 7 do not physically exist on the TJ2-MC__. They cannot be written. Their return value is always 0. Note: **READ_OP** checks the state of the output logic. **READ_OP** can return the value 1 even if no actual output is present.
Arguments	• **output_no** The number of the output. • **first_output_no** The number of the first output of the output range. • **last_output_no** The number of the last output of the output range.
Example	If output 11 has value 1, output 12 has value 1, output 13 has value 0, and output 14 has value 1, **READ_OP(11,14)** returns 13 (1101 bin).
Example	In this example a single output is tested: **WAIT UNTIL READ_OP(12) = ON** **GOSUB place**

Example	Check a range of 8 outputs and call a routine if one of them has value 1:
	op_bits = READ_OP(16, 23)
	IF op_bits <> 0 THEN
	GOSUB check_outputs
	ENDIF

See also	N/A

3.2.263 REG_POS

Type	Axis parameter (read-only)
Syntax	**REG_POS**
Description	The **REG_POS** parameter stores the position in user units at which the primary registration event occurred.
Arguments	N/A

Example

A paper cutting machine uses a CAM profile shape to quickly draw paper through servo driven rollers, and stop the paper so it can be cut. The paper is printed with a registration mark. This mark is detected and the length of the next sheet is adjusted by scaling the CAM profile with the third parameter of the CAM command:

```
' Example Registration Program using CAM stretching:
' Set window open and close:
length=200
OPEN_WIN=10
CLOSE_WIN=length-10
GOSUB Initial
Loop:
  TICKS=0' Set millisecond counter to 0
  IF MARK THEN
    offset=REG_POS
    ' This next line makes offset -ve if at end of sheet:
    IF ABS(offset-length)<offset THEN offset=offset-length
    PRINT "Mark seen at:"offset[5.1]
  ELSE
    offset=0
    PRINT "Mark not seen"
  ENDIF
  ' Reset registration prior to each move:
  DEFPOS(0)
  REGIST(3+768)' Allow mark at first 10mm/last 10mm of sheet
  CAM(0,50,(length+offset*0.5)*cf,1000)
  WAIT UNTIL TICKS<-500
GOTO Loop
```

Note: variable **cf** is a constant that is calculated depending on the draw length of the machine per encoder edge.

See also **AXIS**, **MARK**, **REGIST**.

3.2.264 REG_POSB

Type	Axis parameter (read-only)
Syntax	**REG_POSB**
Description	The **REG_POSB** parameter stores the position in user units at which the secondary registration event occurred.
Arguments	N/A
Example	No example.
See also	**AXIS**, **MARKB**, **REGIST**, **REG_POS**.

3.2.265 REGIST

Type: Axis command

Syntax: **REGIST(mode)**

Description: Depending on the type of unit or Servo Drive, up to 2 registration positions can be captured simultaneously. When a primary registration event has occurred, the **MARK** axis parameter is set to **ON** and the position is stored in the **REG_POS** axis parameter. When a secondary registration event has occurred, the **MARKB** axis parameter is set to **ON** and the position is stored in the **REG_POSB** axis parameter.
The TJ1-FL02 and TJ2-KS02 support 2 registration events. Only TJ2-KS02 supports registration with absolute encoder encoders.
MECHATROLINK-II and EtherCAT registration can be performed using encoder Z-marker or external registration inputs EXT1, EXT2 or EXT3 on a Servo Drive.
For Sigma-II and Sigma-V Servo Drives the registration signals EXT1, EXT2 and EXT3 must be allocated to CN1 inputs with the Drive parameter Pn511.
For Junma Servo Drives only one physical input is available, so no settings of Servo Drive parameters are necessary.
For G-Series Servo Drives there are three physical inputs. The physical input is associated to logical latch EXT1, EXT2 and EXT3, but the corresponding locations on the CN1 connector are fixed, so no settings of Servo parameters are necessary.
For G5-Series Servo Drives the registration signals EXT1, EXT2 and EXT3 must be allocated to CN1 inputs with the Drive parameters Pn400 to Pn407.
G5-Series Servo Drives supports 2 registration events.
The Accurax G-A/P Servo Drive also supports 2 registration events. For an Accurax G5-A/P Servo Drive the registration signals EXT1 and EXT2 must be allocated to CN1. EXT1 can only bet allocated to SI4 (Pn403) and EXT2 can only be allocated to SI5 (Pn404). When allocating EXT1 and/or EXT2 this must be done for all control-modes.

NOTE
For the mapping of the registration signals of the specific Servo Drives, refer to section 5.1.6.

Inclusive windowing lets the registration to occur only within a specified window of axis positions. With this windowing function, registration events are ignored if the axis measured position is not greater than the **OPEN_WIN** axis parameter, and less than the **CLOSE_WIN** parameter.
Exclusive windowing allows the registration to occur only outside of the specified window of axis positions. With this windowing function, the registration events are ignored if the axis measured position is not less than the **OPEN_WIN** axis parameter, and greater than the **CLOSE_WIN** parameter.

Arguments

- **mode**
  The mode parameter specifies the registration input and event for use and the signal edge the registration event occurs. The mode parameter also specifies the use of the windowing function and filtering.
  Use -1 to disable registration.

  The mode parameter differs per device. The function of each bit in the mode parameter is explained in the tables below.

Bit	Function (MECHATROLINK-II, EtherCAT and Accurax G5-A/P) Note: secondary registration only supported by Accurax G5
1, 0	Primary registration occurs for: • 00: Z-mark of the encoder • 01: EXT1 input • 10: EXT2 input • 11: EXT3 input (not supported by Accurax G5-A/P)
2	Set this bit to use primary registration event
3	Not used
5, 4	Secondary registration occurs for: • 00: Z-mark of the encoder • 01: EXT1 input • 10: EXT2 input • 11: EXT3 input (not supported by Accurax G5-A/P)
6	Set this bit to use secondary registration event
7	Not used
9, 8	Windowing function choice: • 00: No windowing • 01: Inclusive windowing • 11: Exclusive windowing
10	Not used

Bit	Function (Encoder interface of TJ1-FL02 and TJ2-KS02)
1, 0	Primary registration occurs for: • 00: Z-mark of the encoder • 01: REG 0 input • 10: REG 1 input • 11: AUX IN input (not supported in TJ2-KS02)
2	Set this bit to use primary registration event
3	Primary registration event occurs on signal: • 0: rising edge • 1: falling edge

Bit	Function (Encoder interface of TJ1-FL02 and TJ2-KS02)
5, 4	Secondary registration occurs for: • 00: Z-mark of the encoder • 01: REG 0 input • 10: REG 1 input • 11: AUX IN input (not supported in TJ2-KS02)
6	Set this bit to use secondary registration event
7	Secondary registration event occurs on signal: • 0: rising edge • 1: falling edge
9, 8	Windowing function choice: • 00: No windowing • 01: Inclusive windowing • 11: Exclusive windowing
10	Set this bit to use filtering function

Bit	Function (EtherCAT encoder)
1, 0	Primary registration occurs for: • 00: Latch A
2	Set this bit to use primary registration event
3	Not used
5, 4	Secondary registration occurs for: • 00: Latch B
6	Set this bit to use secondary registration event
7	Not used
9, 8	Windowing function choice: • 00: No windowing • 01: Inclusive windowing • 11: Exclusive windowing
10	Not used

Example

A disc used in a laser printing process requires registration to the Z marker before it can start to print. The example code locates to the Z marker, and then sets it as the zero position.

```
REGIST(0) 'set registration point on Z mark
FORWARD 'start movement
WAIT UNTIL MARK
CANCEL 'stops movement after Z mark
WAIT IDLE
MOVEABS (REG_POS) 'relocate to Z mark
WAIT IDLE
DEFPOS(0) 'set zero position
```

fig. 64

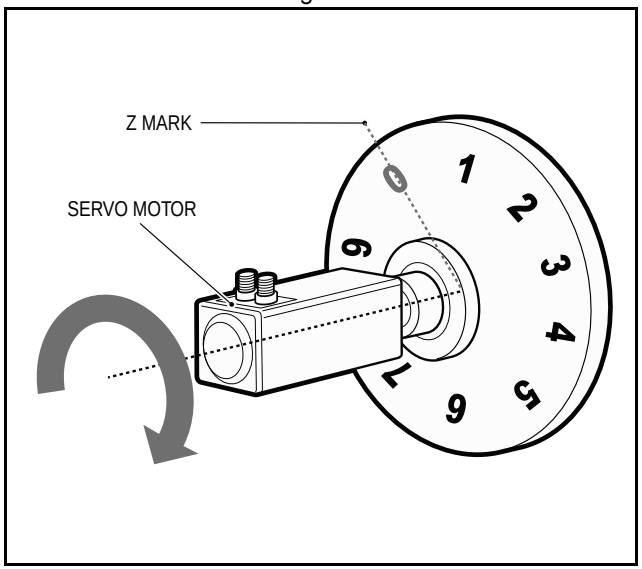

Example

Components are placed on a flighted belt. The flights are 120 mm apart. The components are on the belt 30 mm from the flights. When a component is found, an actuator pushes it off the belt. To prevent that the sensor finds a flight instead of a component, registration with windowing is used.

```
REP_DIST=120 ‘sets repeat distance to pitch of belt flights
REP_OPTION=ON
OPEN_WIN=30 ' sets window open position
CLOSE_WIN=90 ' sets window close position
REGIST(4+256) ' R input registration with windowing
FORWARD ' start the belt
box_seen=0
REPEAT
  WAIT UNTIL MPOS<60 ' wait for centre point between flights
  WAIT UNTIL MPOS>60 ' so that actuator is fired between flights
  IF box_seen=1 THEN ' was a box seen on the previous cycle?
    OP(8,ON) ' fire actuator
    WA(100)
    OP(8,OFF) ' retract actuator
    box_seen=0
  ENDIF
  IF MARK THEN box_seen=1 ' set “box seen” flag
  REGIST(4+256)
UNTIL IN(2)=OFF
CANCEL ' stop the belt
WAIT IDLE
```

fig. 65

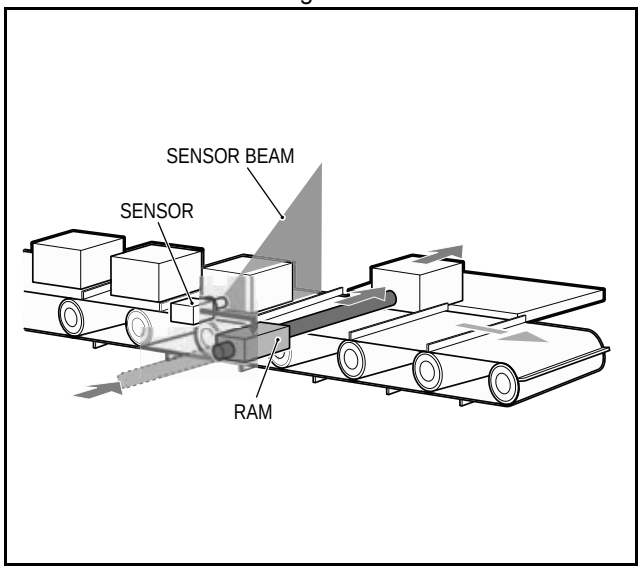

Example A machine adds glue to the top of a box. To do this, it must switch output 8. It must detect the rising edge (appearance) and the falling edge (end) of a box. Also, the MPOS must be set to zero when the Z position is detected.

```
reg=6 'select registration mode 6 (rising edge R, rising edge Z)
REGIST(reg)
FORWARD
WHILE IN(2)=OFF
  IF MARKB THEN 'on a Z mark mpos is reset to zero
    OFFPOS=-REG_POSB
    REGIST(reg)
  ELSEIF MARK THEN 'on R input output 8 is toggled
    IF reg=6 THEN
      'select registration mode 8 (falling edge R, rising edge Z)
      reg=8
      OP(8,ON)
    ELSE
      reg=6
      OP(8,OFF)
    ENDIF
    REGIST(reg)
  ENDIF
WEND
CANCEL
```

fig. 66

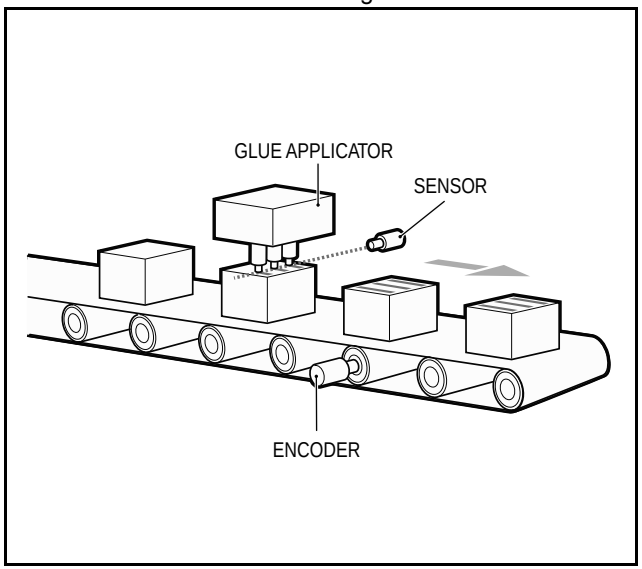

See also **AXIS**, **MARK**, **MARKB**, **REG_POS**, **REG_POSB**, **OPEN_WIN**, **CLOSE_WIN**.

3.2.266 REGIST_SPEED

Type Axis parameter (read-only)

Syntax **REGIST_SPEED**

Description Provides access to the **MSPEED** at the time of the primary registration event.

Arguments N/A

Example No example.

See also **REGIST**

3.2.267 REGIST_SPEEDB

Type	Axis parameter (read-only)
Syntax	**REGIST_SPEEDB**
Description	Provides access to the **MSPEED** at the time of the secondary registration event.
Arguments	N/A
Example	No example.
See also	**REGIST**

3.2.268 REMAIN

Type	Axis parameter (read-only)
Syntax	**REMAIN**
Description	The **REMAIN** parameter contains the distance remaining to the end of the current move. It can be checked to see how much of the move has been completed. The units in which **REMAIN** is expressed depends on the type of the motion command: • If a master axis is moved by **MOVELINK** or **CAMBOX**, **REMAIN** is expressed in user units set by **UNITS**. • If a slave axis is moved by **MOVELINK** or **CAMBOX**, **REMAIN** is expressed in encoder counts. • If a master or a slave axis is moved by a motion command that is not **MOVELINK** or **CAMBOX**, **REMAIN** is expressed in user units set by **UNITS**. The **CONNECT** command moves an axis without a defined end. For this command, **REMAIN** has the fixed value of 1000.
Arguments	N/A
Example	To change the speed to a slower value 5mm from the end of a move. **start:** **SPEED = 10** **MOVE(45)** **WAIT UNTIL REMAIN < 5** **SPEED = 1** **WAIT IDLE**
See also	**AXIS**, **UNIT_INIT**

3.2.269 RENAME

Type	Program command
Syntax	**RENAME "old_program_name" "new_program_name"**
Description	The **RENAME** command changes the name of a program in the TJ2-MC__ directory. The program names can also be specified without quotes. Note: This command is implemented for a Command Line Terminal only and should not be used from within programs.
Arguments	• **old_program_name** The current name of the program. • **new_program_name** The new name of the program.
Example	**RENAME "car" "voiture"**
See also	**COPY**, **DEL**, **NEW**.

3.2.270 REP_DIST

Type: Axis parameter

Syntax: **REP_DIST**

Description: The **REP_DIST** parameter contains the repeat distance, which is the allowable range of movement for an axis before the demand position (**DPOS**) and measured position (**MPOS**) are corrected. **REP_DIST** is defined in user units. The exact range is controlled by **REP_OPTION**. The **REP_DIST** can have any non-0 positive value.
When the measured position has reached its limit, the TJ2-MC__ will adjust the absolute positions without affecting the move in progress or the servo algorithm. Note that the demand position can be outside the range because the measured position is used to trigger the adjustment. When measured position reaches REP_DIST, twice that distance is subtracted to ensure that the axis always stays in the range [-REP_DIST, REP_DIST], assuming that REP_OPTION=OFF, or in the range [0, REP_OPTION], assuming that REP_OPTION=ON.
For every occurrence (**DEFPOS**, **OFFPOS**, **MOVEABS**, **MOVEMODIFY**) which defines a position outside the range, the end position will be redefined within the range.
The default value for all axes is 5000000.

Arguments: N/A

Example: No example.

See also: **AXIS**, **DPOS**, **MPOS**, **REP_OPTION**, **UNIT_INIT**.

3.2.271 REP_OPTION

Type: Axis parameter

Syntax: **REP_OPTION**

Description: The **REP_OPTION** parameter controls the application of the **REP_DIST** axis parameter and the repeat option of the **CAMBOX** and **MOVELINK** Axis commands. The default value is 0. See the table below.

Bit	Description
0	The repeated distance range is controlled by bit 0 of the **REP_OPTION** parameter. • If **REP_OPTION** bit 0 is off, the range of the demanded and measured positions will be between **-REP_DIST** and **REP_DIST**. • If **REP_OPTION** bit 0 is on, the range of the demanded and measured positions will be between 0 and **REP_DIST**.
1	The automatic repeat option of the **CAMBOX** and **MOVELINK** commands are controlled by bit 1 of the **REP_OPTION** parameter. The bit is set on to request the system software to end the automatic repeat option. When the system software has set the option off it automatically clears bit 1 of **REP_OPTION**.

Arguments: N/A

Example: No example.

See also: **AXIS**, **CAMBOX**, **MOVELINK**, **REP_DIST**.

3.2.272 REPEAT..UNTIL

Type: Program control command

Syntax:
REPEAT
commands
UNTIL condition

Description: The **REPEAT ... UNTIL** structure allows the program segment between the **REPEAT** and the **UNTIL** statement to be repeated a number of times until the condition becomes **TRUE**.
Note: **REPEAT ... UNTIL** construct can be nested indefinitely.

Arguments:
- **commands**
  Any valid set of BASIC commands
- **condition**
  Any valid BASIC logical expression

Example A conveyor is to index 100mm at a speed of 1000mm/s, wait for 0.5s and then repeat the cycle until an external counter signals to stop by turning on input 4.

```
cycle:
SPEED = 1000
REPEAT
   MOVE(100)
   WAIT IDLE
   WA(500)
UNTIL IN(4) = ON
```

See also **FOR..TO..STEP..NEXT**, **WHILE..WEND**.

3.2.273 RESET

Type System command

Syntax **RESET**

Description The **RESET** command sets the value of all local variables of the current BASIC task to 0.

Arguments N/A

Example No example.

See also **CLEAR**.

3.2.274 RETURN

See **GOSUB..RETURN**.

3.2.275 REV_IN

Type Axis parameter

Syntax **REV_IN**

Description The **REV_IN** parameter contains the input number to be used as a reverse limit input. The valid input range is 0 to 31. Values 0 to 15 represent physically present inputs of TJ2-MC__ I/O connector and are common for all axes. Values 16 to 31 are mapped directly to Drive inputs that are present on the CN1 connector. They are unique for each axis. It depends on the type of Servo Drive which Servo Drive inputs are mapped into inputs 16 to 31.
As default the parameter is set to -1, no input is selected.
If an input number is set and the limit is reached, any reverse motion on that axis will be stopped. Bit 5 of the **AXISSTATUS** axis parameter will also be set.
Note: This input is active low.

Arguments N/A

Example No example.

See also **AXIS**, **AXIS_FS_LIMIT**, **FWD_IN**.

3.2.276 REV_JOG

Type Axis parameter

Syntax **REV_JOG**

Description The **REV_JOG** parameter contains the input number to be used as a jog reverse input. The input can be from 0 to 31. As default the parameter is set to -1, no input is selected.
Note: This input is active low.

Arguments N/A

Example No example.

See also **AXIS**, **FAST_JOG**, **FWD_JOG**, **JOGSPEED**, **UNIT_INIT**.

3.2.277 REVERSE

Type Axis command

Syntax **REVERSE**
RE

Description The **REVERSE** command moves an axis continuously in reverse at the speed set in the **SPEED** parameter. The acceleration rate is defined by the **ACCEL** axis parameter.
REVERSE works on the default basis axis (set with **BASE**) unless **AXIS** is used to specify a temporary base axis.
Note: The reverse motion can be stopped by executing the **CANCEL** or **RAPIDSTOP** command, or by reaching the reverse limit, inhibit, or origin return limit.

Arguments N/A

Example Run an axis in reverse. When an input signal is detected on input 5, stop the axis.

```
back:
  REVERSE
  WAIT UNTIL IN(0) = ON ' Wait for stop signal
  CANCEL
```

Example Run an axis in reverse. When it reaches a certain position, slow down.

```
DEFPOS(0) ' set starting position to zero
REVERSE
WAIT UNTIL MPOS<-129.45
SPEED=slow_speed
WAIT UNTIL VP_SPEED=slow_speed ' wait until the axis slows
OP(11,ON) ' turn on an output to show that speed is now slow
```

fig. 67

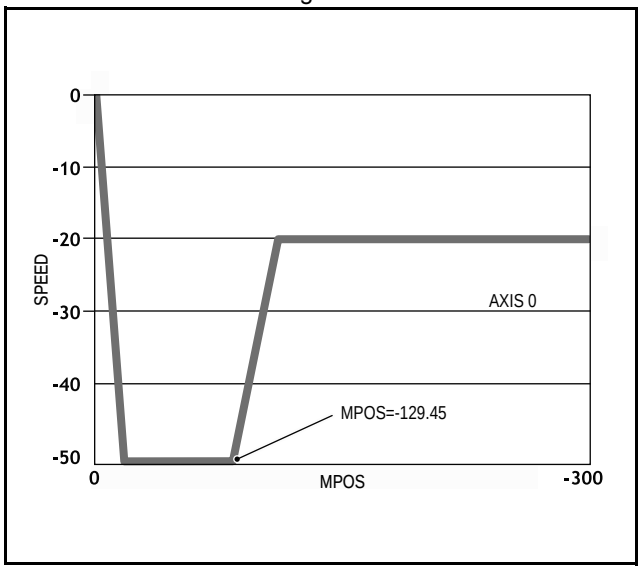

Example A joystick is used to control the speed of a platform. A deadband is required to prevent oscillations from the joystick midpoint. This is done with the **REVERSE** command, which sets the correct direction relative to the operator. Then, the joystick adjusts the speed through analog input 0.

```
REVERSE
WHILE IN(2)=ON
  IF AIN(0)<50 AND AIN(0)>-50 THEN 'sets a deadband in the input
    SPEED=0
  ELSE
    SPEED=AIN(0)*100 'sets speed to a scale of AIN
  ENDIF
WEND
CANCEL
```

See also **AXIS**, **CANCEL**, **FORWARD**, **RAPIDSTOP**.

fig. 68

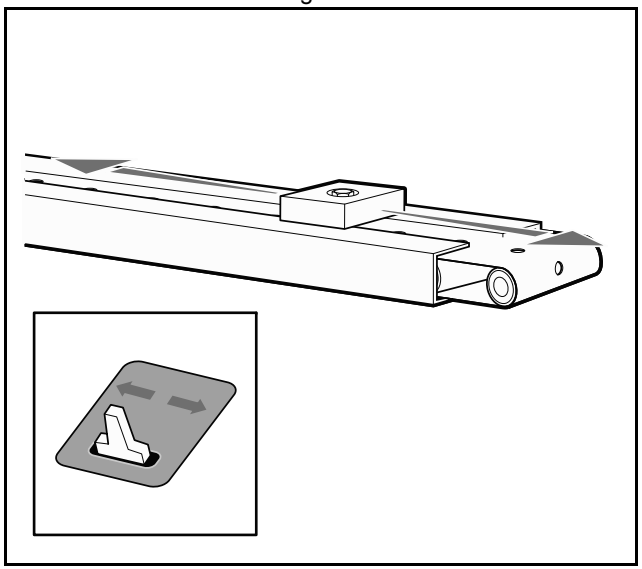

3.2.278 RS_LIMIT

Type Axis parameter

Syntax **RS_LIMIT**
RSLIMIT

Description The **RS_LIMIT** parameter contains the absolute position of the reverse software limit in user units.
A software limit for reverse movement can be set from the program to control the working range of the machine. When the limit is reached, the TJ2-MC__ will decelerate to 0, and then cancel the move. Bit 10 of the **AXISSTATUS** axis parameter will be turned on while the axis position is smaller than / below **RS_LIMIT**.

Arguments N/A

Example No example.

See also **AXIS**, **FS_LIMIT**, **UNIT_INIT**.

3.2.279 RUN

Type	Program command
Syntax	**RUN ["program_name" [, task_number]]**
Description	The **RUN** command executes the program in the TJ2-MC__ as specified with **program_name**. **RUN** with the program name specification will run the current selected program. The program name can also be specified without quotes. The task number specifies the task number on which the program will be run. If the task number is omitted, the program will run on the highest available task. **RUN** can be included in a program to run another program. Note: Execution continues until one of the following occurs: • There are no more lines to execute. • **HALT** is typed at the command line to stop all programs. • **STOP** is typed at the command line to stop a single program. • The **STOP** command in the program is encountered. • A run-time error is encountered.
Arguments	• **program_name** Any valid program name. • **task_number** Any valid task number. Range: [2,21].
Example	**>> SELECT "PROGRAM"** **PROGRAM selected** **>> RUN** This example executes the currently selected program.
Example	**RUN "sausage"** This example executes the program named **sausage**.
Example	**RUN "sausage",3** This example executes the program named **sausage** on task 3.
See also	**HALT**, **STOP**.

3.2.280 RUN_ERROR

Type	Task parameter (read-only)
Syntax	**RUN_ERROR**
Description	The **RUN_ERROR** parameter contains the number of the last BASIC run-time error that occurred on the specified task. Each task has its own **RUN_ERROR** parameter. Use the **PROC** modifier to access the parameter for a certain task. Without **PROC** the current task will be assumed. The table below gives an overview of error numbers and the associated error messages.

Number	Message	Number	Message
1	Command not recognized	25	Command is runtime only
2	Invalid transfer type	26	LABEL expected
3	Error programming Flash	27	Program not found
4	Operand expected	28	Duplicate label
5	Assignment expected	29	Program is locked
6	QUOTES expected	30	Program(s) running
7	Stack overflow	31	Program is stopped
8	Too many variables	32	Cannot select program
9	Divide by zero	33	No program selected
10	Extra characters at end of line	34	No more programs available
11	] expected in **PRINT**	35	Out of memory
12	Cannot modify a special program	36	No code available to run
13	**THEN** expected in **IF**/**ELSEIF**	37	Command out of context
14	Error erasing Flash	38	Too many nested structures
15	Start of expression expected	39	Structure nesting error
16	) expected	40	**ELSE**/**ELSEIF**/**ENDIF** without previous **IF**
17	, expected	41	**WEND** without previous **WHILE**
19	Parameter out of range	42	**UNTIL** without previous **REPEAT**
20	No process available	43	Variable expected
21	Value is read only	44	**TO** expected after **FOR**
22	Modifier not allowed	45	Too may nested **FOR**/**NEXT**
23	Remote axis is in use	46	**NEXT** without **FOR**
23	Remote axis is in use	47	**UNTIL**/**IDLE** expected after **WAIT**
24	Command is command line only	48	**GOTO**/**GOSUB** expected

Number	Message	Number	Message
49	Too many nested **GOSUB**	69	Scope period should exceed number of **AIN** parameters
50	**RETURN** without **GOSUB**	70	Value is incorrect
51	LABEL must be at start of line	71	Invalid I/O channel
52	Cannot nest one line **IF**	72	Value cannot be set. Use **CLEAR_PARAMS** command
53	LABEL not found	73	Directory not locked
54	LINE NUMBER cannot have decimal point	74	Directory already locked
55	Cannot have multiple instances of REMOTE	75	Program not running on this process
56	Invalid use of $	76	Program not running
57	**VR(x)** expected	77	Program not paused on this process
58	Program already exists	78	Program not paused
59	Process already selected	79	Command not allowed when running Trajexia Studio
60	Duplicate axes not permitted	80	Directory structure invalid
61	PLC type is invalid	81	Directory is locked
62	Evaluation error	82	Cannot edit program
63	Reserved keyword not available on this controller	83	Too many nested OPERANDS
64	VARIABLE not found	84	Cannot reset when drive servo on
65	Table index range error	87	Slave error
66	Features enabled do not allow **ATYPE** change	88	Master error
67	Invalid line number	89	Network timeout
68	String exceeds permitted length	90	Network protocol error

Number	Message	Number	Message
91	Global definition is different	110	String expected
92	Invalid program name	111	Invalid **MSPHERICAL** input
93	Program corrupt	112	Too many labels
94	More than one program running when trying to set GLOBAL/CONSTANT	113	Symbol table locked
95	Program encrypted	114	Incorrect symbol type
96	TOKEN definition incorrect	115	Invalid mix of data types
97	Cannot change program type once it has been created	116	Command not allowed when running Trajexia Studio
98	Command expected	117	Parameter expected
99	Invalid command	118	Firmware error: Device in use
100	Invalid parameter for command	119	Device error: Timeout waiting for device
101	Too many tokens in block	120	Device error: Command not supported by device
102	Invalid mix of modal groups	121	Device error: CRC error
103	Variable defined outside include file	122	Device error: Error writing to device
104	Invalid program type	123	Device error: Invalid response from device
105	Variable not declared	124	Firmware error: Cannot reference data outside current block
106	(expected	133	Command only allowed when running Trajexia Studio
107	Number expected	134	# expected
108	AS expected	135	**FOR** expected
109	STRING, VECTOR or ARRAY expected	136	INPUT/OUTPUT/APPEND expected

Number	Message	Number	Message
141	Invalid Floating-Point operation	145	Numerical error: Infinity used
144	Numerical error: Not-a-Number (NaN) used	146	Numerical error: Subnormal value used

Arguments N/A

Example **>> PRINT RUN_ERROR PROC(5)**
9.0000

See also **BASICERROR**, **ERROR_LINE**, **PROC**.

3.2.281 RUNTYPE

Type Program command

Syntax **RUNTYPE "program_name", auto_run [, task_number]**

Description The **RUNTYPE** command determines whether the program, specified by **program_name**, is run automatically at start-up or not and which task it is to run on. The task number is optional, if omitted the program will run at the highest available task.
The current **RUNTYPE** status of each programs is displayed when a **DIR** command is executed. If any program has compilation errors no programs will be started at power up. To set the **RUNTYPE** using Trajexia Studio, use the **Startup Priority** setting of the program **Properties**.

Arguments
- **program_name**
  The name of the program whose **RUNTYPE** is being set.
- **auto_run**
  0 = Running manually on command; 1 = Automatically execute on power up. All non-zero values are considered as 1.
- **task_number**
  The number of the task on which to execute the program. Range: [0, 21].

Example **>> RUNTYPE progname,1,3**
This line sets the program **progname** to run automatically at start-up on task 3.

Example **>> RUNTYPE progname,0**
This line sets the program **progname** to manual running.

See also **AUTORUN**, **EX**.

3.2.282 S_REF

Type Axis parameter

Syntax **S_REF**
DAC

Description This parameter contains the speed reference value which is applied directly to the Servo Drive when the axis is in open loop (**SERVO=OFF**).
For MECHATROLINK-II the available range is [-1073741824, 1073741824], which corresponds to a range [-*servomotor overspeed*, *servomotor overspeed*].
For EtherCAT axes **S_REF** is specified in units/s.
For TJ2-KS02 axes **S_REF** is specified in pulses/s.
For Flexible Axis axes, **S_REF** takes 16 bits, so the available range is [-32768, 32767], which corresponds to a voltage range [-10V, 10V].
These ranges can be limited by using the **OUTLIMIT** parameter.
The value currently being applied to the Servo Drive can be read using the **S_REF_OUT** axis parameter.

Arguments N/A

Example
```
WDOG = ON
SERVO = OFF
square:
   S_REF AXIS(0) = 2000
   WA(250)
   S_REF AXIS(0) = -2000
   WA(250)
GOTO square
```
These lines can be used to force a square wave of positive and negative movement with a period of approximately 500ms on axis 0.

See also **AXIS**, **S_REF_OUT**, **OUTLIMIT**, **SERVO**.

3.2.283 S_REF_OUT

Type Axis parameter (read-only)

Syntax **DAC_OUT**
S_REF_OUT

Description The **S_REF_OUT** parameter contains the speed reference value being applied to the Servo Drive for both open and closed loop.
In closed loop (**SERVO=ON**), the motion control algorithm will output a speed reference signal determined by the control gain settings and the Following Error. The position of the servo motor is determined using the Axis commands. In open loop (**SERVO=OFF**), the speed reference signal is determined by the **S_REF** axis parameter.

Arguments N/A

Example **>> PRINT S_REF_OUT AXIS(0)**
288.0000

See also **AXIS**, **S_REF**, **OUTLIMIT**, **SERVO**.

3.2.284 SCOPE

Type System command

Syntax **SCOPE(control, period, table_start, table_stop, P0 [, P1 [, P2 [, P3]]])**

Description The **SCOPE** command programs the system to automatically store up to 4 parameters every sample period. The storing of data will start as soon as the **TRIGGER** command has been executed.
The sample period can be any multiple of the servo period. The parameters are stored in the TABLE array and can then be read back to a computer and displayed on the Trajexia Studio Data Trace or written to a file for further analysis using **Save Data** of the selected **Data Trace**.
The current TABLE position for the first parameter which is written by **SCOPE** can be read from the **SCOPE_POS** parameter.
Notes:
1.Trajexia Studio uses the **SCOPE** command when running the Oscilloscope function.
2.Applications like the **CAM** command, **CAMBOX** command and the **SCOPE** command all use the same TABLE as the data area.

Arguments
- **control**
  Set on or off to control **SCOPE** execution. If turned on the **SCOPE** is ready to run as soon as the **TRIGGER** command is executed.
- **period**
  The number of servo periods between data samples.
- **table_start**
  The address of the first element in the TABLE array to start storing data.
- **table_stop**
  The address of the last element in the TABLE array to be used.
- **P0**
  First parameter to store.
- **P1**
  Optional second parameter to store.
- **P2**
  Optional third parameter to store.
- **P3**
  Optional fourth parameter to store.

Example **SCOPE(ON,10,0,1000,MPOS AXIS(1),DPOS AXIS(1))**
This example programs the **SCOPE** function to store the **MPOS** parameter for axis 1 and the **DPOS** parameter for axis 1 every 10 servo cycles. The **MPOS** parameter will be stored in TABLE locations 0 to 499; the **DPOS** parameters, in TABLE locations 500 to 999. The **SCOPE** function will wrap and start storing at the beginning again unless stopped. Sampling will not start until the **TRIGGER** command is executed.

Example **SCOPE(OFF)**
This above line turns the scope function off.

See also **SCOPE_POS**, **TABLE**, **TRIGGER**.

3.2.285 SCOPE_POS

Type System parameter (read-only)

Syntax **SCOPE_POS**

Description The **SCOPE_POS** parameter contains the current TABLE position at which the **SCOPE** command is currently storing its parameters.

Arguments N/A

Example No example.

See also **SCOPE**.

3.2.286 SELECT

Type Program command

Syntax **SELECT "program_name"**

Description The **SELECT** command specifies the current program for editing, running, listing, etc. **SELECT** makes a new program if a program with the name entered does not exist. The program name can also be specified without quotes.
When a program is selected, the commands **COMPILE**, **DEL**, **LIST**, **NEW**, **RUN**, **STEPLINE**, **STOP** and **TROFF** will apply to the currently selected program unless a program name is specified in the command line. When another program is selected, the previously selected program will be compiled. The selected program cannot be changed when a program is running.
Note: This command is implemented for a Command Line Terminal.

Arguments N/A

Example
```
>> SELECT "PROGRAM"
PROGRAM selected
>> RUN
```

See also **COMPILE**, **DEL**, **LIST**, **NEW**, **RUN**, **STEPLINE**, **STOP**, **TROFF**.

3.2.287 SERVO

Type Axis parameter

Syntax **SERVO**

Description The **SERVO** parameter determines whether the base axis runs under servo closed loop control (**SERVO=ON**) or open loop (**SERVO=OFF**). In closed loop, the motion control algorithm will output a speed reference signal determined by the control gain settings and the Following Error. The position of the servo motor is determined using the Axis commands.
In open loop, the speed reference signal is determined by the **S_REF** axis parameter (not for position mode).

Arguments N/A

Example **SERVO AXIS(0) = ON ' Axis 0 is under servo control**
SERVO AXIS(1) = OFF ' Axis 1 is run open loop

See also **AXIS**, **FE_LIMIT**, **S_REF**, **S_REF_OUT**, **WDOG**.

3.2.288 SERVO_PERIOD

Type System parameter

Syntax **SERVO_PERIOD**

Description The **SERVO_PERIOD** parameter sets the servo cycle period of the TJ2-MC__. The timing of the execution of the program tasks and the refreshing of the control data and I/O of the Unit are all depending on this setting. The parameter is defined in microseconds. The TJ2-MC__ can be set in either 0.5, 1.0 or 2.0ms servo cycle. See the table below. The controller must be reset before the new servo period will be applied.

Value	Description
250	0.25ms
500	0.5ms
1000	1.0ms
2000	2.0ms

Arguments N/A

Example No example.

See also **EX**.

CAUTION
When the parameter has been set, a power down or software reset (using **EX**) must be performed for the complete system. Not doing so may result in undefined behaviour.

3.2.289 SET_BIT

Type System command

Syntax **SET_BIT(bit_number, vr_number)**

Description The **SET_BIT** command sets the specified bit in the specified VR variable to one. Other bits in the variable will keep their values.

Arguments
- **bit_number**
  The number of the bit to be set. Range: [0,52].
- **vr_number**
  The number of the VR variable for which the bit is set. Range: [0,63999].

Example No example.

See also **CLEAR_BIT**, **READ_BIT**, **VR**.

3.2.290 SETCOM

Type Communication command

Syntax **SETCOM(baud_rate, data_bits, stop_bits, parity, port_number, mode [, data_config [,comms_timeout]])**

Description The **SETCOM** command sets the serial communications for the serial ports. The command will enable the Host Link and ModbusRTU protocols or define the general-purpose communication.
The serial ports have 9,600 baud rate, 7 data bits, 2 stop bits, even parity and XON/XOFF enabled for general-purpose communication by default. These default settings are recovered at start-up.

Arguments
- **baud_rate**
  1200, 2400,4800, 9600,19200, 38400
- **data_bits**
  7, 8
- **stop_bits**
  1, 2
- **parity**
  0 = None; 1 = Odd; 2 = Even.
- **port_number**
  See the table below.

port_number value	Description
1	RS-232C serial port 1
2	RS-422A/485 serial port 2

- **mode**
  Select one of the modes listed in the table below for serial ports 1 and 2.

Mode	Description
0	General-purpose communication (no XON/XOFF mechanism)
4	ModbusRTU Slave Protocol (transfer as 16-bit integers)
5	Host Link Slave protocol
6	Host Link Master protocol
7	ModbusRTU Slave Protocol (transfer as 32-bit IEEE floating pointer)

- **data_config**
  0 = Transfer of VR memory as Modbus registers.
  1 = Transfer of TABLE memory as Modbus register.
- **comms_timeout**
  Timeout for ModbusRTU communication (defaults to 4ms).

Example **SETCOM(19200, 7, 2, 2, 1, 6)**
This sets RS-232C port to 19200 baud rate, 7 data bits, 2 stop bits, even parity for communication as a Host Link Master.

See also N/A

3.2.291 SGN

Type Mathematical function

Syntax **SGN(expression)**

Description The **SGN** function returns the sign of a number. It returns value 1 for positive values (including 0) and value -1 for negative values.

Arguments
- **expression**
  Any valid BASIC expression.

Example **>> PRINT SGN(-1.2)**
-1.0000

See also N/A

3.2.292 SIN

Type Mathematical function

Syntax **SIN(expression)**

Description The **SIN** function returns the sine of the expression. Input values are in radians and may have any value. The result value will be in the range from -1 to 1.

Arguments
- **expression**
  Any valid BASIC expression.

Example **>> PRINT SIN(PI/2)**
1.0000

See also N/A

3.2.293 SLOT

Type	Slot modifier
Syntax	**SLOT**
Description	Modifier specifies the unit number for a parameter such as **COMMSTYPE**. Trajexia unit numbers are 0 to 6, counting from the left most unit.
Arguments	N/A
Example	No example.
See also	N/A

3.2.294 SPEED

Type	Axis parameter
Syntax	**SPEED**
Description	The **SPEED** parameter contains the demand speed for an axis in units/s. It can have any positive value (including 0). The demand speed is the maximum speed for the speed profiled motion commands.
Arguments	N/A
Example	**SPEED = 1000** **PRINT "Set speed = ";SPEED**
See also	**ACCEL**, **AXIS**, **DATUM**, **DECEL**, **FORWARD**, **MOVE**, **MOVEABS**, **MOVECIRC**, **MOVEMODIFY**, **REVERSE**, **UNIT_INIT**.

3.2.295 SPEED_SIGN

Type	Axis parameter
Syntax	**SPEED_SIGN**
Description	The **SPEED_SIGN** parameter configures the voltage range of the analog speed reference output of the TJ1-FL02 when the axis type **ATYPE** is set to 44. If **SPEED_SIGN = OFF**, the voltage range of the analog speed reference output is [-10V, 10V]. The positive reference voltage corresponds to forward movements, in which case **DPOS** and **MPOS** increment. The negative reference voltage corresponds to reverse movements, in which case **DPOS** and **MPOS** decrement. OFF is the default setting at power-on. If **SPEED_SIGN = ON**, the voltage range of the analog speed reference output is [0V, 10V]. The OUT1 signal of the TJ1-FL02 for the corresponding axis is used as a direction signal. During forward movements, the controller sets OUT1 to OFF. During reverse movements, the controller sets OUT1 to ON. This setting is to be used for Servo Drives that require both speed and direction signals as a speed reference.
Arguments	N/A
Example	No example.
See also	**ATYPE**, **S_REF**, **S_REF_OUT**.

3.2.296 SPHERE_CENTRE

Type	Axis command
Syntax	**SPHERE_CENTRE(table_x, table_y, table_z)**
Description	Returns the coordinates of the centre point (x, y, z) of the most recent **MSPHERICAL**. x, y and z are returned in the **TABLE** memory area and can be printed to the terminal as required.
Arguments	• **table_x, table_y, table_z** TABLE memory locations to store the x, y and z coordinates.
Example	**SPHERE_CENTRE(10, 11, 12)** **PRINT TABLE(10);", ";TABLE(11);", ";TABLE(12)**
See also	**MSPHERICAL**

3.2.297 SQR

Type: Mathematical function

Syntax: **SQR(expression)**

Description: The **SQR** function returns the square root of the expression. The expression must have positive (including 0) value.

Arguments:
- **expression**
  Any valid BASIC expression.

Example:
```
>> PRINT SQR(4)
2.0000
```

See also: N/A

3.2.298 SRAMP

Type: Axis parameter

Syntax: **SRAMP**

Description: The **SRAMP** parameter contains the S-curve factor. The S-curve factor controls the amount of rounding applied to the trapezoidal profiles. **SRAMP** should be set, when a move is not in progress, to a maximum of half the **ACCEL**/**DECEL** time. The setting takes a short while to be applied after changes. The default value of the parameter is 0.
SRAMP is applied to the **FORWARD**, **MOVE**, **MOVEABS**, **MOVECIRC**, **MHELICAL** and **REVERSE** commands.
Notes:
- Using S-curves increases the time required for the movement to complete.
- The S-curve factor must not be changed while a move is in progress. If for example **SRAMP** is changed from 0 to 200, then start a move within 200 ms, the full **SRAMP** setting will not be applied.

Arguments: Time between 0..250 ms

Example: To provide smooth transition into the acceleration, an S-curve is applied with a time of 50ms.

```
SPEED = 160000
ACCEL = 1600000
DECEL = 1600000
SRAMP = 50
WA(50)
MOVEABS(100000)
```

Without the S-curve factor, the acceleration takes 100 ms to reach the set speed. With **SRAMP=50**, the acceleration takes 150 ms but the rate of change of force (torque) is controlled. i.e. Jerk is limited.

See also: **AXIS**.

3.2.299 START_DIR_LAST

Type: Axis parameter (read only)

Syntax: **START_DIR_LAST**

Description: Allows the program to examine the start direction in radians of the last programmed **MOVESP**/**MOVEABSSP**/**MOVECIRCSP** move of 2 or more axes.

Arguments: N/A

Example:
```
>>MOVESP(10000,10000)
>>? START_DIR_LAST
0.7854
>>MOVESP(0,10000)
>>? START_DIR_LAST
0.0000
```

See also: **MOVESP**.

3.2.300 STEP

See **FOR..TO..STEP..NEXT**.

3.2.301 STEP_RATIO

Type: Axis command

Syntax: **STEP_RATIO(numerator, denominator)**

Description: This command sets up a ratio for the output of the stepper axis. Every servo-period the number of steps is passed through the **STEP_RATIO** function before it goes to the step pulse output.
Pulse Count Out = (numerator / denominator) * **DPOS**.
STEP_RATIO affects both **MOVECIRC** and **CAMBOX**.
Notes:

- The **STEP_RATIO** function operates before the divide by 16 factor in the stepper axis.
- Large ratios should be avoided as they will lead to either loss of resolution or much reduced smoothness in the motion. The actual physical step size x 16 is the basic resolution of the axis and use of this command may reduce the ability of the Motion Controller to accurately achieve all positions.
- **STEP_RATIO** does not replace **UNITS**. Do not use **STEP_RATIO** to remove the x16 factor on the stepper axis as this will lead to poor step frequency control.
- Executing **STEP_RATIO** without parameters will print the current numerator and denominator.

Arguments:

- **numerator**
  An integer number between 0 and 16777215 that is used to define the numerator in the above equation.
- **denominator**
  An integer number between 0 and 16777215 that is used to define the denominator in the above equation.

Example: Two axes are set up as X and Y but the axes ' steps per mm are not the same. Interpolated moves require identical **UNITS** values on both axes in order to keep the path speed constant and for **MOVECIRC** to work correctly. The axis with the lower resolution is changed to match the higher step resolution axis so as to maintain the best accuracy for both axes.

```
' Axis 0: 500 counts per mm (31.25 steps per mm)
' Axis 1: 800 counts per mm (50.00 steps per mm)
BASE(0)
STEP_RATIO(500,800)
UNITS = 800
BASE(1)
UNITS = 800
```

See also: **ENCODER_RATIO**

3.2.302 STEPLINE

Type: Program command

Syntax: **STEPLINE ["program_name" [, task_number]]**

Description: The **STEPLINE** command executes one line (i.e., "steps") in the program specified by **program_name**. The program name can also be specified without quotes. If **STEPLINE** is executed without program name on the command line the current selected program will be stepped. If **STEPLINE** is executed without program name in a program this program will be stepped.
If the program is specified then all occurrences of this program will be stepped. A new task will be started when there is no copy of the program running. If the task is specified as well then only the copy of the program running on the specified task will be stepped. If there is no copy of the program running on the specified task then one will be started on it.

Arguments:

- **program_name**
  The name of the program to be stepped.
- **task_number**
  The number of the task with the program to be stepped. Range: [0,21].

Example: **>> STEPLINE "conveyor"**

Example: **>> STEPLINE "maths",2**

See also: **RUN**, **SELECT**, **STOP**, **TROFF**, **TRON**.

3.2.303 STOP

Type: Program command

Syntax: **STOP ["program_name" [, task_number]**

Description: The **STOP** command will halt execution of the program specified with **program_name**. If the program name is omitted, then the currently selected program will be halted. The program name can also be specified without quotes.
In case of multiple executions of a single program on different tasks the **task_number** can be used to specify the specific task to be stopped.

Arguments:
- **program_name**
  The name of the program to be stopped.
- **task_number**
  The number of the task with the program to be stopped. Range: [2,21].

Example: **>> STOP progname**

Example: The lines from label on will not be executed in this example.

```
STOP
label:
  PRINT var
  RETURN
```

See also: **HALT**, **RUN**, **SELECT**.

3.2.304 STOP_ANGLE

Type: Axis parameter

Syntax: **STOP_ANGLE**

Description: Used to define the angle change in radians above which an X-Y system should decelerate to zero speed. Operation of **STOP_ANGLE** applies to **MOVESP**/**MOVEABSSP**/**MOVECIRCSP** and depends on setting of **DECEL_ANGLE** and **CORNER_MODE**. If the X-Y system turns through an angle between **STOP_ANGLE** and **DECEL_ANGLE** the system will slow down to an intermediate speed.

Arguments: N/A

Example:

```
' Stop above 25 deg (0.4363 rad)
STOP_ANGLE = 0.4363
```

See also: **DECEL_ANGLE**

3.2.305 SYNC

Type: Axis command

Syntax: **SYNC(control, sync_time, [sync_position, sync_axis, pos1[, pos2 [,pos3]]])**

Description: The **SYNC** command is used to synchronise one axis with a moving position on another axis. This can be used to synchronise a robot to a point on a conveyor. The user can define a time to synchronise and de-synchronise.
The synchronising movement on the base axis is the sum of two parts:
1. The conveyor movement from the ‘sync_pos’, this is the movement of the demand point along the conveyor.
2. The movement to ‘pos1’, this is the position in the current coordinate system where the sync_pos was captured on the slave axis.
When the axis is synchronised it will follow the movements on the ‘sync_axis’.
As the **SYNC** does not fill the **MTYPE** buffer you can perform movements while synchronised.
Warning:
As **SYNC** does not get loaded in to the move buffer it is not cancelled by **CANCEL** or **RAPIDSTOP**, you have to perform **SYNC**(4). When a software or hardware limit is reached the **SYNC** is immediately stopped with no deceleration.
Tip:
Typically you can use the captured position **REG_POS**, or a position from a vision system for the ‘sync_position’. The pos1, pos2 and pos3 are typically the position of the sensor/ vision system in the current **USER_FRAME**.

Arguments

- **control**
  1 = Start synchronisation, requires minimum first 5 parameters
  4 = Stop synchronisation, requires minimum first 2 parameters
  10 = Re-synchronise to another axis belonging to the same **USER_FRAME**, requires minimum first 5 parameters
  20 = Re-synchronise to another axis belonging to **USER_FRAMEB** (for example a conveyor which is not aligned with any of the axes of the robot), requires minimum first 5 parameters
- **sync_time**
  Time to complete the synchronisation movement in milliseconds
- **sync_position**
  The captured position on the sync_axis.
- **sync_axis**
  The axis to synchronise with.
- **pos1**
  Absolute position on the first axis on the base array
- **pos2**
  Absolute position on the second axis on the base array
- **pos3**
  Absolute position on the third axis on the base array

Example

The robot must pick up the components from one conveyor and place them at 100mm pitch on the second. The registration sensor is at 385mm from the robots origin and the start of the second conveyor is 400mm from the robots origin.

```
'axis(0) - robot axis x, axis(1) - robot axis y
'axis(2) - robot axis z
'axis(3) - robot wrist rotate
'These are the actual robot axis, FRAME=14 can be applied to these
'axis(10) - conveyor axis
'axis(11) - conveyor axis
'These are the real conveyors that you wish to link to
'Sensor and conveyor offsets
sen_xpos = 385
conv1_yoff = 200
conv2_yoff = -250
conv2_xoff = 40
place_pos = 0
BASE(0,1)
'Move to home position.
MOVEABS(200,50)
'start conveyors
DEFPOS(0) AXIS(11) ' reset conveyor position for place
FORWARD AXIS(10)
FORWARD AXIS(11)
WAIT IDLE
WHILE(running)
  REGIST(20,0,0,0,0) AXIS(10)
  WAIT UNTIL MARK AXIS(10)
  SYNC(1, 1000, REG_POS, 10, sen_xpos , conv1_yoff)
  WAIT UNTIL SYNC_CONTROL AXIS(0)=3
  'Now synchronised
  GOSUB pick
  SYNC(10, 1000, place_pos, 11, conv2_xoff, conv2_yoff)
  WAIT UNTIL SYNC_CONTROL AXIS(0)=3
  'Now synchronised
  GOSUB place
  SYNC(4, 500)
  place_pos = place_pos + 100
WEND
```

See also

SYNC_CONTROL, **SYNC_TIMER**, **USER_FRAME**, **USER_FRAMEB**

3.2.306 SYNC_CONTROL

Type	Axis parameter (Read Only)
Syntax	**SYNC_CONTROL**
Description	**SYNC_CONTROL** returns the current **SYNC** state of the axis
Arguments	• **value** 0 = No synchronisation 1 = Starting synchronisation 2 = Performing synchronisation movement 3 = Synchronised 4 = Stopping synchronisation 5 = Starting interpolated movement on second or third axis 6 = Performing interpolated movement on second or third axis 10 = Starting re- synchronisation 11 = Performing re- synchronisation 20 = Starting re-synchronisation to a different **USER_FRAME** 21 = Performing re-synchronisation to a different **USER_FRAME**
Example	Synchronise to a conveyor linking to a position defined from registration, then wait until synchronisation before picking a part **'Set up start position and link to conveyor** **SYNC(10, 500, REG_POS AXIS(5), 5) AXIS(0)** **WAIT UNTIL SYNC_CONTROL AXIS(0)= 3** **GOSUB pick_part**
See also	**SYNC**

3.2.307 SYNC_TIMER

Type	Axis parameter (Read Only)
Syntax	**SYNC_TIMER**
Description	**SYNC_TIMER** returns the elapsed time of the synchronisation or re-synchronisation phase. Once the synchronisation is complete the **SYNC_TIMER** will return the completed synchronisation time.
Arguments	• **value** The elapsed time of the synchronisation phase in milliseconds
Example	Synchronise to a conveyor linking to a position defined from registration, then wait until synchronisation before picking a part **'Set up start position and link to conveyor** **SYNC(10, 500, REG_POS AXIS(5), 5) AXIS(0)** **WAIT UNTIL SYNC_TIMER AXIS(0)= 500** **GOSUB pick_part**
See also	**SYNC**

3.2.308 TOOL_OFFSET

Type Axis parameter

Syntax **TOOL_OFFSET(identity, x_offset, y_offset, z_offset)**

fig. 69

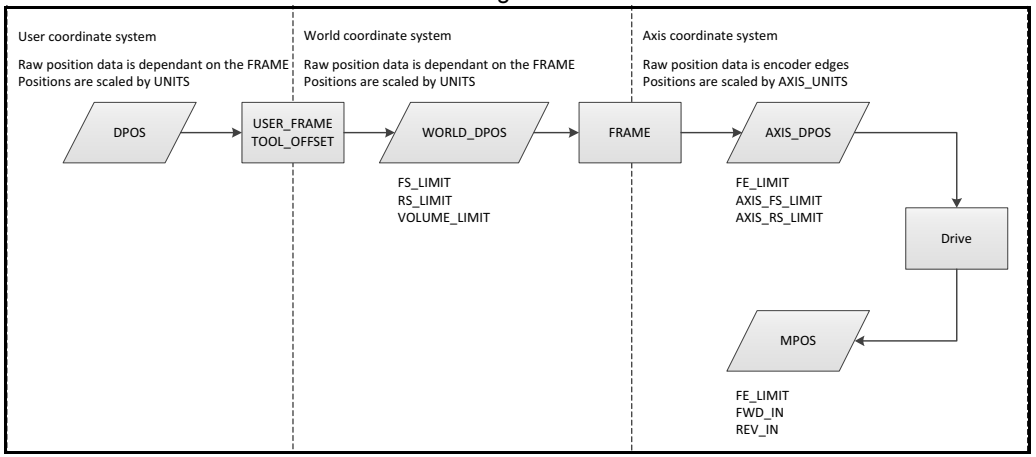

Description **TOOL_OFFSET** can be used to adjust the position of a coordinate system to align with a tool point. It does not affect to the definition of the coordinate system, but changes (compensates) the position of the robot to achieve the target position with the selected tool.
Multiple tool points can be assigned and the user can switch between points on the fly.
The default **TOOL_OFFSET** has the identity 0 and is equal to the world coordinate system origin, this cannot be modified. If you wish to disable the **TOOL_OFFSET** select **TOOL_OFFSET**(0).
TOOL_OFFSETs are applied on the axis **FRAME_GROUP**. If no **FRAME_GROUP** is defined then a runtime error will be generated.
Movements are loaded with the selected **TOOL_OFFSET**. This means that you can buffer a sequence of movements on different tools. The active **TOOL_OFFSET** is the one associated with the movement in the **MTYPE**. If the **FRAME_GROUP** is **IDLE** then the active **TOOL_OFFSET** is the selected **TOOL_OFFSET**.
Tip:
If you wish to check which **USER_FRAME**, **TOOL_OFFSET** and **VOLUME_LIMIT** are active you can print the details using **FRAME_GROUP**(group).

Arguments
- **identity**
  0 = default group which is set to the world coordinate system
  1 to 31 = Identification number for the user defined tool offset.
- **x_offset**
  Offset in the x axis from the world origin to the user origin.
- **y_offset**
  Offset in the y axis from the world origin to the user origin.
- **z_offset**
  Offset in the z axis from the world origin to the user origin.

Example A tool is rotated 45degrees about the y axis and has an offset of 20mm in the x direction, 30mm in the y direction and 300mm in the z direction. The programmer wants to move the tool forward on its axis so a **TOOL_OFFSET** is applied to adjust the position to the tool tip, then a **USER_FRAME** is applied to allow programming about the tool axis.

```
'Configure USER_FRAME and TOOL_OFFSET
FRAME_GROUP(0,0,0,1,2)
USER_FRAME(1, 20, 30, 300, 0, PI/4, 0)
TOOL_OFFSET(1, 20, 30, 300)
'Select tool and frame and start motion.
USER_FRAME(1)
TOOL_OFFSET(1)
BASE(2)
FORWARD
```

See also **USER_FRAME**, **FRAME_GROUP**

3.2.309 SYSTEM_ERROR

Type System parameter (read only)

Syntax **SYSTEM_ERROR**

Description The **SYSTEM_ERROR** parameter contains system errors that occurred in the TJ2 system since the last time it was initialized. The bits in the **SYSTEM_ERROR** parameter are given in the table below.

Bit	Description
0	SRAM memory error
1	Battery low error
2 - 7	Reserved for future use
8	Configuration unit error (Any unit in the system)
9	Configuration device error (Any device in the system)
10 - 15	Reserved for future use
16	Unit lost error (Any unit in the system)
17	Terminator not fitted / too many units connected
18	Device lost error (Any device in the system)
19	Unsupported unit (Any unit in the system)
20	Device error (Any device in the system)

Arguments N/A.

Example No example.

See also N/A

3.2.310 T_REF

Type Axis parameter

Syntax **T_REF**
DAC

Description The **T_REF** parameter contains the torque reference value which will be applied to the servo motor.
For MECHATROLINK-II axes, the available range is [-1073741824, 1073741824], which corresponds to a torque range [-*Peak torque*, *Peak torque*].
For EtherCAT and TJ2-KS02 axes, the available range is [-5000, 5000], which corresponds to a torque range [-500.0%, 500.0%].
These ranges can be limited by using the **OUTLIMIT** parameter.
The actual torque reference is depending on the servo motor.

Arguments N/A

Example **T_REF AXIS(0)=1000**

See also **AXIS**, **S_REF**, **OUTLIMIT**.

3.2.311 TABLE

Type System command

Syntax **TABLE(address, value {, value})**
TABLE(address)

Description The **TABLE** command loads data to and reads data from the TABLE array. The TABLE has a maximum length of 500000 elements. The TABLE values are floating-point numbers with fractions. The TABLE can also be used to hold information, as an alternative to variables. The **TABLE** command has two forms.

- **TABLE(address, value{, value})** writes a sequence of values to the TABLE array. The location of the first element to write is specified by address. The sequence can have a maximum length of 20 elements.
- **TABLE(address)** returns the TABLE value at the entry specified by address.

A value in the TABLE can be read-only if a value of that number or higher has been previously written to the TABLE. For example, printing **TABLE(1001)** will produce an error message if the highest TABLE location previously written to the TABLE is location 1000. The total TABLE size is indicated by the **TSIZE** parameter. Note that this value is one more than the highest defined element address.The TABLE can be deleted with by using **DEL "TABLE"** or **NEW "TABLE"** on the command line.
Notes:

- Applications like the **CAM** command, **CAMBOX** command and the **SCOPE** command in Trajexia Studio all use the same TABLE as the data area. Do not use the same data area range for different purposes.
- The TABLE and VR data can be accessed from all different running tasks. To avoid problems of two program tasks writing unexpectedly to one global variable, write the programs in such a way that only one program writes to the global variable at a time.

Arguments
- **address**
  The first location in the TABLE to read or write. Range: [0,499999]
- **value**
  The value to write at the given location and at subsequent locations.

Example **TABLE(100,0,120,250,370,470,530,550)**
The above line loads an internal table as below.

Table entry	Value
100	0
101	120
102	250
103	370
104	470
105	530
106	550

Example The following line will print the value at location 1000.
>> PRINT TABLE(1000)

See also **CAM**, **CAMBOX**, **DEL**, **NEW**, **SCOPE**, **TSIZE**, **VR**.

3.2.312 TABLE_POINTER

Type Axis parameter (read only)

Syntax **value = TABLE_POINTER**

Description Using the **TABLE_POINTER** parameter it is possible to determine which TABLE memory location is currently being used by the CAM allowing the user to load new CAM data into previously processed **TABLE** location ready for the next CAM cycle. This is ideal for allowing a technician to finely tune a complex process, or changing recipes on the fly whilst running. **TABLE_POINTER** returns the current table location that the CAM function is using. The returned number contains the table location and divides up the interpolated distance between the current and next **TABLE** location to indicate exact location.

Arguments N/A

Example In this example a CAM profile is loaded into TABLE location 1000 and is setup on axis 0 and is linked to a master axis 1. A copy of the CAM table is added at location 100. The Analogue input is then read and the CAM TABLE value is updated when the table pointer is on the next value.

```
'CAM Pointer demo
' store the live table points
TABLE(1000,0,0.8808,6.5485,19.5501,39.001,60.999,80.4499,93.4515)
TABLE(1008,99.1192,100)
' Store another copy of original points
TABLE(100,0,0.8808,6.5485,19.5501,39.001,60.999,80.4499,93.4515)
TABLE(108,99.1192,100)
' Initialise axes
BASE(0)
WDOG=ON
SERVO=ON
' Set up CAM
CAMBOX(1000,1009,10,100,1, 4, 0)
'Start Master axis
BASE(1)
SERVO=ON
SPEED=10
FORWARD
'Read Analog input and scale CAM based on input
pointer=0
WHILE 1
  'Read Analog Input (Answer 0-10)
  scale=AIN(32)*0.01
  'Detects change in table pointer
  IF INT(TABLE_POINTER)<>pointer THEN
    pointer=INT(TABLE_POINTER)
    'First value so update last value
    IF pointer=1000 THEN
      TABLE(1008,(TABLE(108)*scale))
      'Second Value, so must update First & Last but 1 value
    ELSEIF pointer=1001 THEN
      TABLE(1000,(TABLE(100)*scale))
      TABLE(1009,(TABLE(109)*scale))
      'Update previous value
    ELSE
      TABLE(pointer-1, (TABLE(pointer-901)*scale))
    ENDIF
  ENDIF
WEND
```

See also **CAM**, **TABLE**

3.2.313 TABLEVALUES

Type System command

Syntax **TABLEVALUES(address, number_of_points, format)**

Description Returns a list of TABLE points starting at the number specified. There is only one format supported at the moment, and that is comma delimited text.
Note: **TABLEVALUES** is provided mainly for Trajexia Studio to allow for fast access to banks of TABLE values.

Arguments
- **address**
  Number of the first point to be returned
- **number_of_points**
  Total number of points to be returned
- **format**
  Format for the list (0 = comma delimited text)

Example No example.

See also N/A

3.2.314 TAN

Type Mathematical function

Syntax **TAN(expression)**

Description The **TAN** function returns the tangent of the expression. The expression is assumed to be in radians.

Arguments
- **expression**
  Any valid BASIC expression.

Example
```
>> print TAN(PI/4)
1.0000
```

See also N/A

3.2.315 TANG_DIRECTION

Type: Axis parameter

Syntax: **TANG_DIRECTION**

Description: When used with a 2 axis X-Y system, this parameter returns the angle in radians that represents the vector direction of the interpolated axes. The value returned is between –PI and +PI and is determined by the directions of the interpolated axes as follows:

X	Y	Value
0	1	0
1	0	PI/2
0	-1	PI (+PI or –PI)
-1	0	-PI/2

Arguments: N/A

Example:

```
' Note scale_factor_x MUST be the same as scale_factor_y
UNITS AXIS(4)=scale_factor_x
UNITS AXIS(5)=scale_factor_y
BASE(4,5)
MOVE(100,50)
angle = TANG_DIRECTION
```

See also: **MOVETANG**

3.2.316 THEN

See **IF..THEN..ELSE..ENDIF**.

3.2.317 TICKS

Type: Task parameter

Syntax: **TICKS**

Description: The **TICKS** parameter contains the current count of the task clock pulses. **TICKS** is a 64-bit counter that is decremented on each servo cycle. **TICKS** can be written and read. It can be used to measure cycles times, add time delays, etc.
Each task has its own **TICKS** parameter. Use the **PROC** modifier to access the parameter for a certain task. Without **PROC** the current task will be assumed.

Arguments: N/A

Example:

```
delay:
  TICKS = 3000
  OP(9,ON)
test:
  IF TICKS <= 0 THEN
    OP(9,OFF)
  ELSE
    GOTO test
  ENDIF
```

See also: N/A

3.2.318 TIME

Type	System parameter
Syntax	**TIME**
Description	Sets and returns the time from the real time clock. The time returned as an integer is the number of seconds since midnight 00:00:00.
Arguments	N/A
Example	Sets the real time clock in 24 hour format; hh:mm:ss **'Set the real time clock** **>>TIME = 13:20:00** **>> PRINT TIME** **>> 48002.0000** Print executed after 2 seconds
See also	N/A

3.2.319 TIME$

Type	System command
Syntax	**TIME$**
Description	Prints the current time as defined by the real time clock as a string in 24-hour format.
Arguments	N/A
Example	When the time is 13:20:00 **>> PRINT TIME$** **>> 13:20:00**
See also	N/A

3.2.320 TO

See **FOR..TO..STEP..NEXT**.

3.2.321 TRANS_DPOS

Type	Axis parameter (read-only)
Syntax	**TRANS_DPOS**
Description	Axis demand position at output of frame transformation. **TRANS_DPOS** is normally equal to **DPOS** on each axis. The frame transformation is therefore equivalent to 1:1 for each axis. For some machinery configurations it can be useful to install a frame transformation which is not 1:1, these are typically machines such as robotic arms or machines with parasitic motions on the axes. Frame transformations have to be specially written in the C language and downloaded into the controller. It is essential to contact OMRON if you want to install frame transformations.
Arguments	N/A
Example	No example.
See also	**FRAME**.

3.2.322 TRIGGER

Type	System command
Syntax	**TRIGGER**
Description	The **TRIGGER** command starts a previously set up **SCOPE** command. Note: Trajexia Studio uses **TRIGGER** automatically for its oscilloscope function.
Arguments	N/A
Example	No example.
See also	**SCOPE**.

3.2.323 TROFF

Type	Program command
Syntax	**TROFF ["program_name"]**
Description	The **TROFF** command suspends a trace at the current line and resumes normal program execution for the program specified with **program_name**. The program name can also be specified without quotes. If the program name is omitted, the selected program will be assumed.
Arguments	• **program_name** The name of the program for which to suspend tracing.
Example	**>> TROFF "lines"**
See also	**SELECT**, **TRON**.

3.2.324 TRON

Type	Program command
Syntax	**TRON**
Description	The **TRON** command creates a breakpoint in a program that will suspend program execution at the line following the **TRON** command. The program can then for example be executed one line at a time using the **STEPLINE** command. Notes: • Program execution can be resumed without using the **STEPLINE** command by executing the **TROFF** command. • The trace mode can be stopped by issuing a **STOP** or **HALT** command.
Arguments	N/A
Example	**TRON** **MOVE(0,10)** **MOVE(10,0)** **TRON** **MOVE(0,-10)** **MOVE(-10,0)**
See also	**SELECT**, **TROFF**.

3.2.325 TRUE

Type	Constant (read-only)
Syntax	**TRUE**
Description	The **TRUE** constant returns the numerical value -1.
Arguments	N/A

Example	**test:**
	t = IN(0) AND IN(2)
	IF t = TRUE THEN
	PRINT "Inputs are ON"
	ENDIF

See also	N/A

3.2.326 TSIZE

Type	System parameter (read-only)
Syntax	**TSIZE**
Description	The **TSIZE** parameter returns the size of the TABLE array, which is one more than the currently highest defined TABLE element. **TSIZE** is reset to 0 when the TABLE array is deleted using **DEL "TABLE"** or **NEW "TABLE"** on the command line.
Arguments	N/A
Example	The following example assumes that no location higher than 1000 has been written to the TABLE array. **>> TABLE(1000,3400)** **>> PRINT TSIZE** **1001.0000**
See also	**DEL**, **NEW**, **TABLE**.

3.2.327 UNIT_CLEAR

Type	System command
Syntax	**UNIT_CLEAR [SLOT(unit_number)]**
Description	This command clears the error of the specified unit.
Arguments	• **unit_number** Unit numbers are 0 to 6, with 0 being the unit immediately to the right of the TJ2-MC__.
Example	N/A
See also	**UNIT_ERROR**

3.2.328 UNIT_DISPLAY

Type	System parameter
Syntax	**UNIT_DISPLAY [SLOT(unit_number)] = value**
Description	The **UNIT_DISPLAY** parameter enables different data to be displayed by the LEDs on the front cover of the TJ2-ECT__ unit. LEDs affected by this parameter setting are four yellow LEDs showing the input status. The default value of this parameter on start-up is 0. Set value to the following to define the function of the LEDs: 0 = the LEDs show the status of the first 4 inputs 1 = the LEDs show the status of the last 4 inputs
Arguments	• **unit_number** Unit numbers are 0 to 6, with 0 being the unit immediately to the right of the TJ2-MC__.
Example	The following example causes the 4 yellow LEDs of the TJ2-ECT__ in slot 1 (second extension unit) to show the status of inputs 4, 5, 6 and 7. **UNIT_DISPLAY SLOT(1) = 1**
See also	N/A

3.2.329 UNIT_ERROR

Type	System parameter (read only)
Syntax	**UNIT_ERROR**
Description	This parameter returns a bitfield indicating which units are in error where each bit corresponds with a unit.
Arguments	N/A
Example	N/A
See also	**UNIT_CLEAR**

3.2.330 UNIT_INIT

Type	System command
Syntax	**UNIT_INIT(unit_number)**
Description	The **UNIT_INIT** command will initialise communication with all drives attached to the TJ2-KS02 and will assign the initial **ATYPE**s for connected drives. This command is required when drives are powered-on or attached after startup of the controller. Upon successful execution, this command returns -1. If this command fails, it returns 0. Note: a virtual axis will be assigned when a TJ2-KS02 connector is not connected to a Servo Drive, or when the connected Servo Drive is not powered. The **ATYPE** parameter can be used to verify if the Servo Drive has been detected.
Arguments	• **unit_number** Unit numbers are 0 to 6, with 0 being the unit immediately to the right of the TJ2-MC__.
Example	The following example shows a succesful initialisation of a TJ2-KS02, resulting in 3 axes: **>> PRINT UNIT_INIT(0)** **KS02[0]: 0 1 2** **-1.0000**
See also	N/A

3.2.331 UNITS

Type	Axis parameter
Syntax	**UNITS**
Description	The **UNITS** parameter contains the unit conversion factor. The unit conversion factor enables the user to define a more convenient user unit like m, mm or motor revolutions by specifying the amount of encoder edges to include in a user unit. Axis parameters like speed, acceleration, deceleration and the Axis commands are specified in these user units. Note: The **UNITS** parameter can be any non-zero value, but it is recommended to design systems with an integer number of encoder pulses per user unit. Changing **UNITS** will affect all axis parameters which are dependent on **UNITS** in order to keep the same dynamics for the system. Note: The Gear ratio inside the MECHATROLINK-II and EtherCAT servo drives affects the resolution of the motor encoder.
Arguments	N/A
Example	A leads crew arrangement has a 5mm pitch and a 1,000-pulse/rev encoder. The units must be set to allow moves to be specified in mm. The 1,000 pulses/rev will generate 1,000 x 4 = 4,000 edges/rev. One rev is equal to 5mm. Therefore, there are 4,000/5 = 800 edges/mm. **UNITS** is thus set as following. **>> UNITS = 1000*4/5**
See also	**AXIS**, **ENCODER_RATIO**.

3.2.332 UNLOCK

See **LOCK**.

3.2.333 UNTIL

See **REPEAT..UNTIL**.

3.2.334 USER_FRAME

Type Axis parameter

Syntax **USER_FRAME(identity [, x_offset, y_offset, z_offset [, x_rotation [, y_rotation [, z_rotation]]]])**

Description The **USER_FRAME** allows the user to program in a different coordinate system. The **USER_FRAME** can be defined up to a 3-axis translation and rotation from the world coordinate origin. The rotations are applied using the Euler ZYX convention. This means that the z rotation is applied first, then the y is applied on the new coordinate system and finally the x is applied. The coordinate system is defined using the 'right hand rule' and the rotation of the origin is defined using the 'right hand turn'.
The default coordinate system has the identity 0 and is equal to the world coordinate system, this cannot be modified. If you wish to disable the **USER_FRAME** select **USER_FRAME**(0).
USER_FRAMEs are applied on the axis **FRAME_GROUP**. If no **FRAME_GROUP** is defined then a runtime error will be generated.
Movements are loaded with the selected **USER_FRAME**. This means that you can buffer a sequence of movements on different **USER_FRAME**s. The active **USER_FRAME** is the one associated with the movement in the **MTYPE**. If the **FRAME_GROUP** is **IDLE** then the active **USER_FRAME** is the selected **USER_FRAME**.
Note:
The **USER_FRAME** is applied to all the axes in the **FRAME_GROUP**. This can be the same group as used by **FRAME**. The **FRAME_GROUP** does not have to be 3 axis, however the **USER_FRAME** will only process position for the axes in the **FRAME_GROUP**. It can be useful in a 2 axes **FRAME_GROUP** to perform a **USER_FRAME** rotation about the third axis.
Tip:
If you wish to check which **USER_FRAME**, **TOOL_OFFSET** and **VOLUME_LIMIT** are active you can print the details using **FRAME_GROUP**(group).

fig. 70

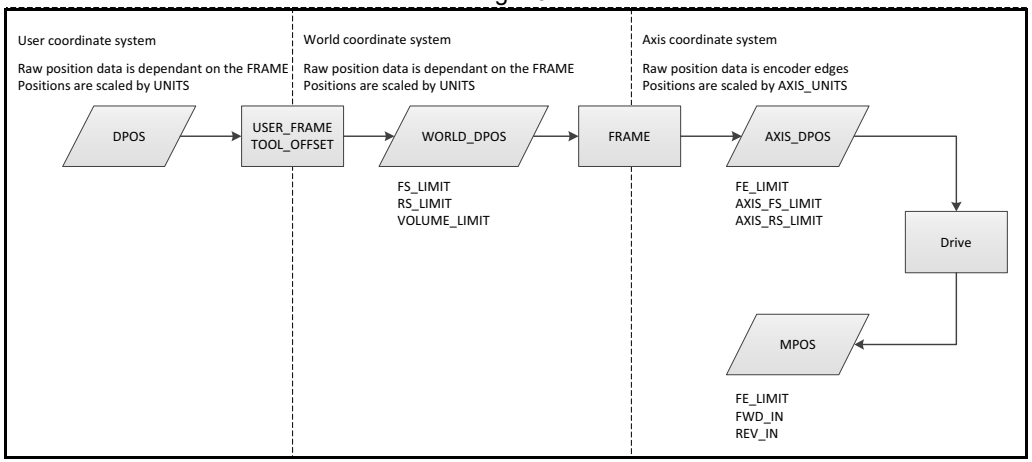

Arguments

- **identity**
  0 = default group which is set to the world coordinate system
  1 to 31 = Identification number for the user defined frame.
- **x_offset**
  Offset in the x axis from the world origin to the user origin.
- **y_offset**
  Offset in the y axis from the world origin to the user origin.
- **z_offset**
  Offset in the z axis from the world origin to the user origin.
- **z_rot**
  Rotation about the items z axis in radians.
- **y_rot**
  Rotation about the items y axis in radians.
- **x_rot**
  Rotation about the items x axis in radians.

Example

A conveyors origin is at 45 degrees to the world coordinate (robots) origin, as shown in the image. To ease programming a **USER_FRAME** is assigned to align the x axis with the conveyor so that it is possible to program in the conveyor coordinate system.

FRAME_GROUP(0,0,0,1,2)
USER_FRAME(1,0,0,0,PI/4)

fig. 71

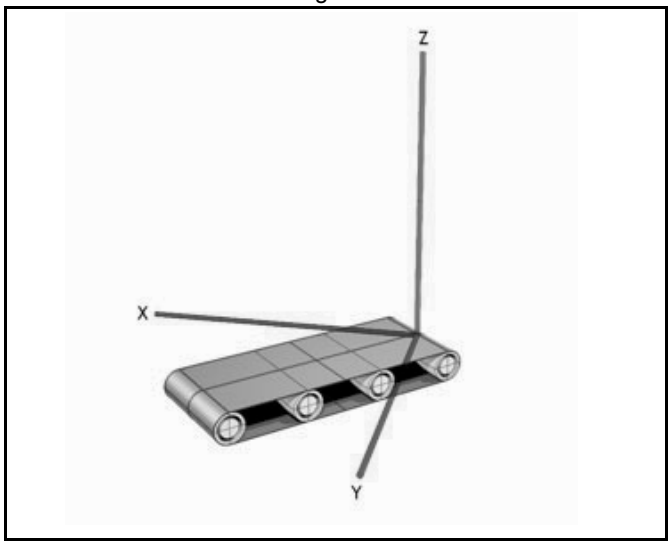

Example

Initialise a user coordinate system then perform a movement on the world coordinate system before starting a **FORWARD** on the first user coordinate system.

FRAME_GROUP(0,0,0,1,2)
BASE(0,1,2)
DEFPOS(10,20,30)
USER_FRAME(1,10,20,30,PI/2)
USER_FRAME(0)
MOVEABS(100,100,50)
WAIT IDLE
USER_FRAME(1)
FORWARD

See also **FRAME**

3.2.335 USER_FRAMEB

Type	Axis parameter
Syntax	**USER_FRAMEB(identity)**
Description	**USER_FRAMEB** is only used with **SYNC**. It defines the new **USER_FRAME** to resynchronise to when performing the **SYNC**(20) operation. When the resynchronisation is complete **USER_FRAMEB** is the active **USER_FRAME**. **USER_FRAMEB** selects one of the defined **USER_FRAME**s.
Arguments	• **identity** 0 = default group which is set to the world coordinate system 1 to 31 = Identification number for the user defined frame.
Example	The robot must pick up the components from one conveyor and place them on a second conveyor which is in a different **USER_FRAME**.

```
WHILE(running)
   USER_FRAMEB(conv1)
   REGIST(20,0,0,0,0) AXIS(10)
   WAIT UNTIL MARK AXIS(10)
   SYNC(1, 1000, REG_POS, 10, sen_xpos , conv1_yoff)
   WAIT UNTIL SYNC_CONTROL AXIS(0)=3
   'Now synchronised
   GOSUB pick
   USER_FRAMEB(conv2)
   SYNC(20, 1000, place_pos, 11, conv2_xoff, conv2_yoff)
   WAIT UNTIL SYNC_CONTROL AXIS(0)=3
   'Now synchronised
   GOSUB place
   SYNC(4, 500)
   place_pos = place_pos + 100
WEND
```

See also	**SYNC**, **USER_FRAME**

3.2.336 USER_FRAME_TRANS

Type: Mathematical Function

Syntax: **USER_FRAME_TRANS(user_frame_in, user_frame_out, tool_offset_in, tool_offset_out, table_in, table_out, [scale])**

fig. 72

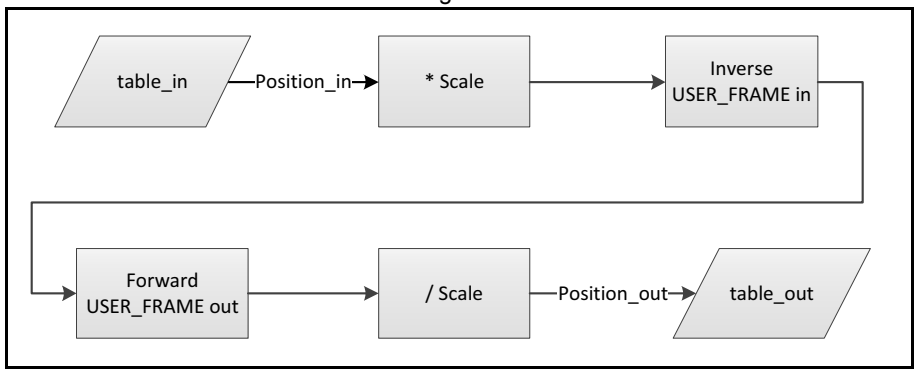

Description: This function enables you to transform a set of positions from one frame to another. This could be used to take a set of positions from a vision system and transform them so that they are a set of positions relative to a conveyor. It is required to set-up a **FRAME_GROUP** and **USER_FRAME** to use this function. If you do not wish to set up a **USER_FRAME** with real axis you can use virtual.

Tip:

The **USER_FRAME** calculations are performed on raw position data which are integers. The table data is scaled by the scale parameter, for optimal resolution scale should be set to the **UNITS** of the robot.

Note:

As all the **USER_FRAME** transformations use the same coordinate scale it does not matter if the positions are supplied as raw positions or scaled by **UNITS**.

Arguments:

- **user_frame_in**
  The USER_FRAME identity that the points are supplied in
- **user_frame_out**
  The USER_FRAME identity that the points are transformed to
- **tool_offset_in**
  The TOOL_OFFSET identity that the points are supplied in
- **tool_offset_out**
  The TOOL_OFFSET identity that the points are transformed to
- **table_in**
  The start of the input positions
- **table_out**
  The start of the generated positions
- **scale**
  This parameter allows you to scale the table values (default 1000)

Example	**USER_FRAME**(vision) has been configured to the vision system relative to the robot origin. The conveyor has been configures in **USER_FRAME**(conveyor). To use the vision system positions on the conveyor **USER_FRAME** they must be transformed through **USER_FRAME_TRANS**. **USER_FRAME_TRANS(vision, conveyor, 0, 0, 200,300)**
See also	**USER_FRAME**

3.2.337 VECTOR_BUFFERED

Type	Axis parameter (read only)
Syntax	**VECTOR_BUFFERED**
Description	This holds the total vector length of the buffered moves. It is effectively the amount the system can assume is available for deceleration.
Arguments	N/A
Example	No example.
See also	**ENDMOVE_BUFFER**, **MOVES_BUFFERED**

3.2.338 VERSION

Type	System parameter (read-only)
Syntax	**VERSION**
Description	The **VERSION** parameter returns the current firmware version number of the current system installed in the TJ2-MC__.
Arguments	N/A
Example	**>> PRINT VERSION** **1.6100**
See also	N/A

3.2.339 VFF_GAIN

Type	Axis parameter
Syntax	**VFF_GAIN**
Description	The **VFF_GAIN** parameter contains the speed feed forward gain. The speed feed forward output contribution is calculated by multiplying the change in demand position with the **VFF_GAIN** parameter value. The default value is 0. Adding speed feed forward gain to a system decreases the Following Error during a move by increasing the output proportionally with the speed. Note: In order to avoid any instability the servo gains should be changed only when the **SERVO**=OFF.
Arguments	N/A
Example	No example.
See also	**D_GAIN**, **I_GAIN**, **OV_GAIN**, **P_GAIN**.

3.2.340 VOLUME_LIMIT

Type	Axis Function
Syntax	**VOLUME_LIMIT(mode [,table_offset])**
Description	**VOLUME_LIMIT** enables a software limit that restricts the motion into a defined three dimensional shape. The calculations are performed on **DPOS** and so it can be used in addition to a **FRAME**. The limit applies to axes defined in a **FRAME_GROUP**. ***Warning:*** If no **FRAME_GROUP** is defined then a 'parameter out of range' run time error will be returned when **VOLUME_LIMIT** is called. All axes in the **FRAME_GROUP** must have the same **UNITS** When the limit is active moves on all axes in the **FRAME_GROUP** are cancelled and so will stop with the programmed **DECEL** or **FAST_DEC**. Any active **SYNC** is also stopped. **AXISSTATUS** bit 15 is also set. This means you should set your **VOLUME_LIMIT** smaller than the absolute operating limits of the robot.
Arguments	• **mode** 0 = **VOLUME_LIMIT** is disabled 1 = Cylinder with cone base volume • **table_offset** The start position in the table to store the **VOLUME_LIMIT** configuration

fig. 73

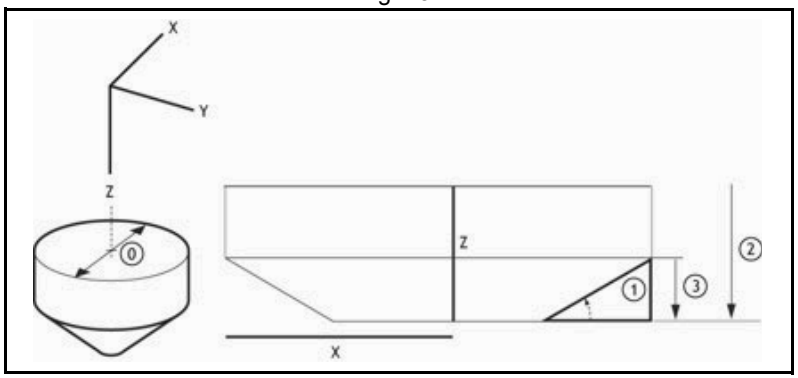

Mode 1	Mode 1 enables a cylinder with a cone base, this is a typical working volume for a delta robot. The origin for the shape is the top middle. It is possible to align this with your coordinate system using the X,Y and Z offsets ***Tip:*** If you wish to check which **USER_FRAME**, **TOOL_OFFSET** and **VOLUME_LIMIT** are active you can print the details using **FRAME_GROUP**(group).

Arguments
Mode 1

- **mode**
  1 = Cylinder with cone base volume
- **table_offset**
  0 = Cylinder Diameter
  1 = Cone angle in radians
  2 = Total height
  3 = Cone height
  4 = X offset
  5 = Y offset
  6 = Z offset

Example

The cylinder with a flat base is typically used with delta robots (**FRAME**=14), the following example configures the **VOLUME_LIMIT** with this configuration.

TABLE(100,1100)' Cylinder diameter
TABLE(101,(60/360)* 2* PI)' Cone angle
TABLE(102,400)' Total height
TABLE(103,150)' Cone height
TABLE(104,0)' X offset
TABLE(105,0)' Y offset
TABLE(106,750)' Z offset
VOLUME_LIMIT(1,100)

See also **USER_FRAME**

fig. 74

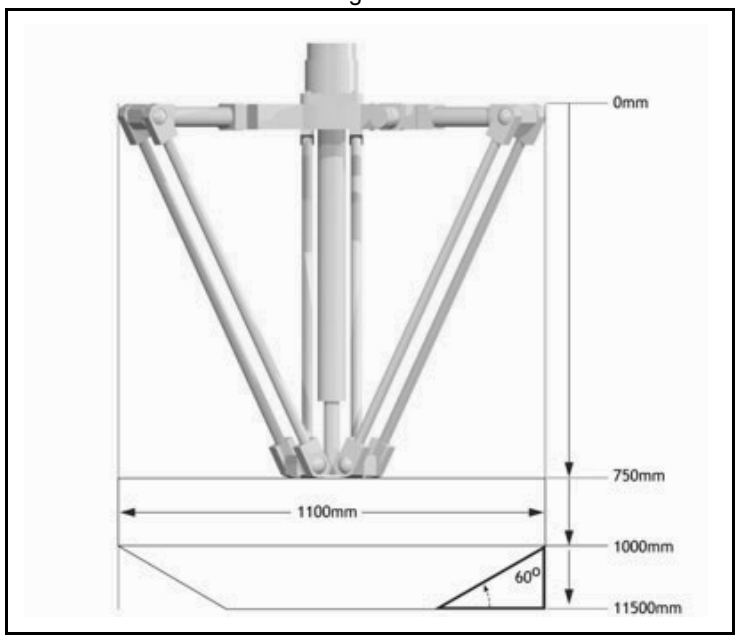

3.2.341 VP_SPEED

Type: Axis parameter (read-only)

Syntax: **VP_SPEED**

Description: The **VP_SPEED** parameter contains the speed profile speed in user units/s. The speed profile speed is an internal speed which is accelerated and decelerated as the movement is profiled.

Arguments: N/A

Example:

```
' Wait until at command speed
MOVE(100)
WAIT UNTIL SPEED = VP_SPEED
```

See also: **AXIS**, **MSPEED**, **UNIT_INIT**.

3.2.342 VR

Type: System command

Syntax: **VR(address)**

Description: The **VR** command reads or writes the value of a global (**VR**) variable. These **VR** variables hold real numbers and can be easily used as an element or as an array of elements. The TJ2-MC__ has in total 64000 **VR** variables.
The **VR** variables can be used for several purposes in BASIC programming. The **VR** variables are globally shared between tasks and can be used for communications between tasks. VR variable memory area is battery backed, so all **VR** variables retain their values between power ups
Notes:

- The **TABLE** and **VR** data can be accessed from all different running tasks. To avoid problems of two program tasks writing unexpectedly to one global variable, write the programs in such a way that only one program writes to the global variable at a time.

Arguments:

- **address**
  The address of the **VR** variable. Range: [0,63999].

Example: In the following example, the value 1.2555 is placed into **VR** variable 15. The local variable **val** is used to name the global variable locally:

```
val = 15
VR(val) = 1.2555
```

Example: A transfer gantry has 10 put down positions in a row. Each position may at any time be full or empty. VR(101) to VR(110) are used to hold an array of ten 1 ' s and 0 ' s to signal that the positions are full (1) or empty (0). The gantry puts the load down in the first free position. Part of the program to achieve this would be as follows:

```
movep:
  MOVEABS(115) ' Move to first put down position
  FOR VR(0) = 101 TO 110
    IF (VR(VR(0)) = 0) THEN GOSUB load
    MOVE(200) ' 200 is spacing between positions
  NEXT VR(0)
  PRINT "All positions are full"
  WAIT UNTIL IN(3) = ON
  GOTO movep

load: ' Put load in position and mark array
  OP(15,OFF)
  VR(VR(0)) = 1
  RETURN
```

The variables are backed up by a battery so the program here could be designed to store the state of the machine when the power is off. It would of course be necessary to provide a means of resetting completely following manual intervention.

Example:

```
loop: ' Assign VR(65) to VR(0) multiplied by axis 1 measured position
  VR(65) = VR(0)*MPOS AXIS(1)
  PRINT VR(65)
  GOTO loop
```

See also: **CLEAR_BIT**, **READ_BIT**, **SET_BIT**, **TABLE**.

3.2.343 VRSTRING

Type	System command
Syntax	**VRSTRING(vr_start)**
Description	Combines the contents of an array of VR() variables so that they can be printed as a text string. All printable characters will be output and the string will terminate at the first null character found. (i.e. VR(n) contains 0)
Arguments	• **vr_start** number of first VR() in the character array.
Example	**PRINT #5,VRSTRING(100)**
See also	N/A

3.2.344 WA

Type	System command
Syntax	**WA(time)**
Description	The **WA** command pauses program execution for the number of milliseconds specified for time. The command can only be used in a program.
Arguments	• **time** The number of milliseconds to hold program execution.
Example	The following lines would turn ON output 7 two seconds after turning off output 1. **OP(1,OFF)** **WA(2000)** **OP(7,ON)**
See also	N/A

3.2.345 WAIT IDLE

Type	System command
Syntax	**WAIT IDLE**
Description	The **WAIT IDLE** command suspends program execution until the base axis has finished executing its current move and any buffered move. The command can only be used in a program. **WAIT IDLE** works on the default basis axis (set with **BASE**) unless **AXIS** is used to specify a temporary base axis. Note: The execution of **WAIT IDLE** does not necessarily mean that the axis will be stationary in a servo motor system.
Arguments	N/A
Example	**MOVE(1000)** **WAIT IDLE** **PRINT "Move Done"** The print statement is printed at the end of the movement.
Example	**MOVE(1000)** **WAIT UNTIL MTYPE=0** **PRINT "Movement finished"** The print statement is printed, most of the times BEFORE the movement starts, and sometimes, when the movement is finished.
Explanation	Motion programs and motion sequence work in parallel and unsynchronized. One complete cycle can occur before the movement is loaded into the buffer. The program executes **MOVE(1000)** but the movement is not loaded to the buffer until the start of the next "motion sequence" so when you check **MTYPE=0**, it is **0** because the movement HAS NOT STARTED YET, not because it has finished.
See also	**AXIS**, **WAIT LOADED**.

NOTE
WAIT IDLE is a command specifically designed to wait until the previous movement has been finished so, it handles the delay from when the previous command is executed in the program until the command is correctly loaded in the motion buffer.

3.2.346 WAIT LOADED

Type System command

Syntax **WAIT LOADED**

Description The **WAIT LOADED** command suspends program execution until the base axis has no moves buffered ahead other than the currently executing move. The command can only be used in a program.
This is useful for activating events at the beginning of a move, or at the end when multiple moves are buffered together.
WAIT LOADED works on the default basis axis (set with **BASE**) unless **AXIS** is used to specify a temporary base axis.

Arguments N/A

Example
```
' Switch output 8 ON at start of MOVE(500) and OFF at end
MOVE(800)
MOVE(500)
WAIT LOADED
OP(8,ON)
MOVE(400)
WAIT LOADED
OP(8,OFF)
```

See also **AXIS**, **WAIT IDLE**

3.2.347 WAIT UNTIL

Type System command

Syntax **WAIT UNTIL condition**

Description The **WAIT UNTIL** command repeatedly evaluates the condition until it is **TRUE**. After this program execution will continue. The command can only be used in a program.

Arguments
- **condition**
  Any valid BASIC logical expression.

Example In this example, the program waits until the measured position on axis 0 exceeds 150, and then starts a movement on axis 1.
```
WAIT UNTIL MPOS AXIS(0)>150
MOVE(100) AXIS(1)
```

Example The expressions evaluated can be as complex as you like provided they follow BASIC syntax, for example:
```
WAIT UNTIL DPOS AXIS(2) <= 0 OR IN(1) = ON
```
The above line would wait until the demand position of axis 2 is less than or equal to 0 or input 1 is on.

See also N/A

3.2.348 WDOG

Type System parameter

Syntax **WDOG**

Description The **WDOG** parameter contains the software switch which enables the Servo Drive using the **RUN** (Servo on) input signal. The enabled Servo Drive will control the servo motor depending on the speed and torque reference values. **WDOG** can be turned on and off under program control or on the Command Line Terminal.
The Servo Drive will automatically be disabled when a **MOTION_ERROR** occurs. A motion error occurs when the **AXISSTATUS** state for one of the axes matches the **ERRORMASK** setting. In this case the software switch (**WDOG**) will be turned off, the **MOTION_ERROR** parameter will have value different than 0 and the **ERROR_AXIS** parameter will contain the number of the first axis to have the error.

Arguments N/A

Example When WDOG is turned on, an EtherCAT Servo Drive will make the transition from the “Switched on” state to the “Operation enabled” state. Only after the Servo Drive is in the “Operation enabled” state it can process motion commands. Therefore it is advisable to check if the Servo Drive is in that state. This can be done as follows:
```
WAIT UNTIL DRIVE_STATUS AND 4
```
With this line the BASIC program will wait until bit 2 is set, which reflects the “Operation enabled” state.

See also **AXIS_FS_LIMIT**, **ERROR_AXIS**, **ERRORMASK**, **MOTION_ERROR**, **SERVO**.

3.2.349 WHILE..WEND

Type Program control command

Syntax
```
WHILE condition
  commands
WEND
```

Description The **WHILE ... WEND** structure allows the program segment between the **WHILE** and the **WEND** statement to be repeated a number of times until the condition becomes **FALSE**. In that case program execution will continue after **WEND**.
Note: **WHILE ... WEND** loops can be nested without limit.

Arguments
- **condition**
  Any valid logical BASIC expression.

Example
```
WHILE IN(12) = OFF
  MOVE(200)
  WAIT IDLE
  OP(10,OFF)
  MOVE(-200)
  WAIT IDLE
  OP(10,ON)
WEND
```

See also **FOR..TO..STEP..NEXT**, **REPEAT..UNTIL**

3.2.350 XOR

Type Mathematical operation

Syntax **expression1 XOR expression2**

Description The **XOR** (eXclusive OR) operator performs the logical **XOR** function between corresponding bits of the integer parts of two valid BASIC expressions.
The logical **XOR** function between two bits is defined as in the table below.

Bit 1	Bit 2	Result
0	0	0
0	1	1
1	0	1
1	1	0

Arguments
- **expression1**
  Any valid BASIC expression.
- **expression2**
  Any valid BASIC expression.

Example **VR(0)=10 XOR 18**
The **XOR** is a bit operator and so the binary action taking place is as follows: **01010 XOR 10010 = 11000**. The result is therefore 24.

See also N/A

4 Communication protocols

4.1 Available interfaces

The Trajexia units have these interfaces to communicate:

Unit	Interface	Protocol	Comment
TJ2-MC__	Ethernet	Trajexia Studio protocol	To program, monitor and debug the project with Trajexia Studio.
		FINS server	To communicate with any FINS master, for example PLC, HMI, or personal computer.
		FINS client	To communicate to any FINS server, for example PLC or another Trajexia unit.
		ModbusTCP	To respond to any ModbusTCP request, for example a PLC unit.
		EtherNet/IP	To respond to any EtherNet/IP request.
	Serial	Host Link Master	To communicate with any Host Link slave, for example an OMRON PLC.
		Host Link Slave	To communicate with any Host Link master, HMI typically.
		ModbusRTU slave	To communicate with any Mod-busRTU master.
		User defined	This protocol is created and han-dled using BASIC commands.
TJ1-PRT	PROFIBUS	PROFIBUS Slave DP-V0	To exchange word variables with any PROFIBUS master.
TJ1-DRT	DeviceNet	DeviceNet	To exchange word variables with any DeviceNet master.
TJ1-CORT	CANopen	CANopen	To exchange word variables within a CANopen network.
TJ1-ML__	MECHA-TROLINK-II	MECHATROLINK-II	To communicate with supported MECHATROLINK-II slaves. This protocol is transparent to the user.
TJ2_ECT__	EtherCAT	EtherCAT	To communicate with supported EtherCAT slaves.

4.2 Ethernet

The TJ2-MC__ has a standard 10/100 Mbps Ethernet port. You can use a crossover or a patch Ethernet cable to connect the TJ2-MC__ to a PC.
To configure the interface, set these parameters:

Item	Default value	Comment
IP address	192.168.0.250	Set one IP address that is unique in the network.
Subnet mask	255.255.255.0	Set the same subnet that the LAN uses.
Gateway	0.0.0.0	The gateway is necessary to have remote access from another LAN.

Make sure that the IP address of the PC is in the same range as the TJ2-MC__: if the IP address of the TJ2-MC__ is *aaa.bbb.ccc.ddd*, the IP address of the PC must be *aaa.bbb.ccc.xxx*, where *xxx* is 000 to 255 other than *ddd*. You can change the IP address of the TJ2-MC__ to match the IP address of your PC if you connect to the PC through a network hub or switch. For example, if the IP address of the PC is 192.200.185.1, you can set the IP address of the TJ2-MC__ to 192.200.185.2.

NOTE
The above is true if the subnet mask setting is the factory setting, that is, the subnet mask is not changed.

WARNING
Setting an invalid IP address (e.g. 0.0.0.0 or 127.0.0.1), an invalid Subnet mask or combinations of both can result in not being able to communicate anymore with the controller. In that case the controller has to be sent back for repair.

NOTE
The TJ2-MC__ does not have DHCP functionality, therefore it cannot assign an IP address to a PC.

The subnet mask of the TJ2-MC__ is generic. It does not need to match with the subnet mask of the PC.
Use the **Ethernet** command to read or write the Ethernet settings. It is necessary to power off and on again the units for the changes to take effect.
You can check the IP address of the TJ2-MC__ with the Trajexia Studio command-line and the **Ethernet** command: Type the command **Ethernet(0, -1, 0)** at the command-line, and the IP address of the TJ2-MC__ shows on the command-line.

NOTE
You need to set the power of the Trajexia system off and back on before the change of the IP address takes effect.

4.2.1 Trajexia Studio protocol

The Trajexia Studio protocol is used by Trajexia Studio to program, monitor and debug the TJ2-MC__.

Trajexia Studio uses a Telnet protocol. By default, this connection uses port 23. If this port is not accessible, you can change the port number with the command **Ethernet(1,-1,4,new_port_n)**.

Unlike the standard Ethernet commands, this command takes effect immediately after execution. The port changes to default at power on. Therefore, this command needs to be included in any program that is executed at power on.

The Trajexia Studio Protocol is TCP only.

4.2.2 FINS server protocol

FINS (Factory Interface Network Service) is a Proprietary OMRON communication protocol. A subset of this protocol is implemented in Trajexia. Refer to the Communication Commands Reference manual (W342-E1).

The FINS protocol enables seamless communication with other OMRON devices such as PLCs, HMIs, and CX-Drive.
The FINS server protocol requires no configuration settings.

By default, this connection uses port 9600. If this port is not accessible, you can change the port with the command **Ethernet(1,-1,12,new_port_n)**.

Unlike the standard Ethernet commands, this command takes effect immediately after execution. The port changes to default at power on. Therefore, this command needs to be included in any program that is executed at power on.

The FINS commands allow communications between nodes in different networks. A FINS master device can read and write the Trajexia VR variables and TABLE memory variables with FINS commands. These commands use the Ethernet connection of the TJ2-MC__.
The FINS server protocol is UDP only.

NOTE
The maximum length of a FINS command over an Ethernet connection is 2012 bytes.

Trajexia supports these FINS commands:
- 0101 (Read memory)
- 0102 (Write memory)
- 2001 (General Purpose Read)
- 2002 (General Purpose Write)

Read command (0101)

The FINS **read** command has this format:

01	**01**	**..**	**..** **..**	**00**	**..** **..**
command_code		**var_type**	**start_address**	**fixed**	**element_count**

The parameters can have the following values:

Parameter	Values (hex)
command_code	01 01
var_type	• 82 (TABLE memory in 16-bit integer format) • C2 (TABLE memory in 32-bit IEEE floating-point format) • B0 (VR memory in 16-bit integer format) • F0 (VR memory in 32-bit IEEE floating-point format)
start_address	0 <= **start_address** <= number of variables - 1 <= FFFF
element_count	1 <= **element_count** <= number of variables - **start_address**

The TJ2-MC__ responds with these codes:

Condition	Response code (hex)	Description
All elements valid	0000	OK
Var_type invalid	1101	No area type
Start_address invalid	1103	Address range designation error
Number of elements invalid	1104	Address out of range

If **var_type** is 82 or B0, and the response code is 0000, the TJ2-MC__ responds with:

01	**01**	**00**	**00**		
command_code		**response_code**		**word_1**	**word_2**	**...**

If **var_type** is C2, and the response code is 0000, the TJ2-MC__ responds with:

01	**01**	**00**	**00**		
command_code		**response_code**		**dword_1**	**...**

NOTE
The returned words and dwords are in big-endian format.

Write command (0102)

The FINS **write** command has these formats:

- If **var_type** is 82 or B0:

01 02	**..**	**.. ..**	**00**	**.. ..**	**.. ..**	**.. ..**
command_ code	**var_ type**	**start_ address**	**fixed**	**total_words**	**word 1**	**..**

- If **var_type** is C2:

01 02	**C2**	**.. ..**	**00**	**.. ..**	**.. ..**	**.. ..**	**..**
command_ code	**var_ type**	**start_ address**	**fixed**	**total_ words**	**dword 1**		**..**

- If **var_type** is 30:

01 02	**30**	**.. ..**	**00**	**.. ..**	**.. ..**	
command_ code	**var_ type**	**start_ address**	**bit_ num**	**total_bits**	**bit**	

The parameters can have the following values:

Parameter	Values
command_code	01 02
var_type	• 82 (TABLE memory in 16-bit integer format) • C2 (TABLE memory in 32-bit IEEE floating-point format) • B0 (VR memory in 16-bit integer format) • F0 (VR memory in 32-bit IEEE floating-point format) • 30 (VR memory in bit format)
start_address	0 <= **start_address** <= number of variables - 1 <= FFFF
total_words	1 <= **total_words** <= memory size - **start_address** + 1
total_bits	1
bit	00 or 01

The TJ2-MC__ responds with these codes:

Condition	Response code (hex)	Description
All elements valid	0000	OK
Var_type invalid	1101	No area type
Start_address invalid	1103	Address range designation error
Bit_number invalid	1103	Address range designation error
Number of elements invalid (totals)	1104	Address out of range

General Purpose Read command (2001)

The FINS **General Purpose read** command has this format:

20 01	**00**	**00**	**..**	**xx**	**yy**	**zz**	**.. ..**
command_code	**parameter**		**var_ type**	**start_address**			**element_count**

The parameters can have the following values:

Parameter	Values (hex)
command_code	20 01
parameter	00 00
var_type	See table below
start_address	See definition below
element_count	1 <= **element_count** <= number of variables - **start_address**

var_type (upper 4 bits)	Values (hex)
Unsigned Integer 16 bits	0
Unsigned Integer 32 bits	1
Integer 16 bits	8
Integer 32 bits	9
Floating point 32 bits	D
Floating point 64 bits	E

var_type (lower 4 bits)	Values (hex)
Axis parameters	1
VR memory	2
TABLE memory	3

Example:
Read VR in 64 bit IEEE Floating point format: **var_type** = 0xE2

When reading axis parameters (for the offsets see the table below):
- xx = axis number
- yy = axis parameter offset (Most significant byte)
- zz = axis parameter offset (Least significant byte)

When reading VR or TABLE:
- xx = memory address (Most significant byte)
- yy = memory address (Middle byte)
- zz = memory address (Least Significant byte)

The TJ2-MC__ responds with these codes:

Condition	Response code (hex)	Description
All elements valid	0000	OK
Var_type invalid	1101	No area type
Start_address invalid	1103	Address range designation error
Number of elements invalid	1104	Address out of range
Maximum length exceeded	110B	Reply (response) exceeds the maximum response length
Parameter error	110C	Invalid var_type

If the response code is 0000, the TJ2-MC__ responds with:

20	01	00	00	..	..	..
command_code		**response_code**		**byte_1**	**byte_2**	**..**

NOTE
The returned words and dwords are in big-endian format.

Axis parameters offsets	
Offset	**Axis parameter**
0	UNITS
1	ACCEL
2	ATYPE
3	AXIS_ENABLE
4	AXISSTATUS
5	CREEP
6	D_GAIN
7	DAC
8	DATUM_IN
9	DECEL
10	DEMAND_SPEED
11	DPOS
12	DRIVE_CONTROL
13	DRIVE_INPUTS
14	DRIVE_MONITOR
15	DRIVE_STATUS
16	ENCODER
17	ENCODER_BITS
18	ENCODER_CONTROL
19	ERRORMASK
20	FASTDEC
21	FE
22	FE_LIMIT
23	FE_RANGE
24	FHOLD_IN
25	FHSPEED

Axis parameters offsets	
Offset	**Axis parameter**
26	FS_LIMIT
27	FWD_IN
28	I_GAIN
29	JOGSPEED
30	MARK
31	MPOS
32	MSPEED
33	MTYPE
34	NTYPE
35	OV_GAIN
36	P_GAIN
37	REG_POS
38	REMAIN
39	REP_DIST
40	REP_OPTION
41	REV_IN
42	RS_LIMIT
43	SERVO
44	SPEED
45	TRANS_DPOS
46	VFF_GAIN
47	VP_SPEED
48	MARKB
49	REG_POSB

General Purpose Write command (2002)

The FINS **General Purpose write** command has this format:

20 02	00	00	..	xx	yy	zz	.. ..	.. ..
command_ code	**parameter**		**var_ type**	**start_address**			**element_ count**	**write_data**

The parameters can have the following values:

Parameter	Values (hex)
command_code	20 02
parameter	00 00
var_type	See table below
start_address	See definition below
element_count	1 <= **element_count** <= number of variables - **start_address**
write_data	Data to be written

var_type (upper 4 bits)	Values (hex)
Unsigned Integer 16 bits	0
Unsigned Integer 32 bits	1
Integer 16 bits	8
Integer 32 bits	9
Floating point 32 bits	D
Floating point 64 bits	E

var_type (lower 4 bits)	Values (hex)
Axis parameters	1
VR memory	2
TABLE memory	3

Example:
Write VR in 64 bit IEEE Floating point format: **var_type** = 0xE2

When writing axis parameters (for the offsets see the table at the General Purpose Read command):
- xx = axis number
- yy = axis parameter offset (Most significant byte)
- zz = axis parameter offset (Least significant byte)

When writing VR or TABLE:
- xx = memory address (Most significant byte)
- yy = memory address (Middle byte)
- zz = memory address (Least Significant byte)

The TJ2-MC__ responds with these codes:

Condition	Response code (hex)	Description
All elements valid	0000	OK
Var_type invalid	1101	No area type
Start_address invalid	1103	Address range designation error
Number of elements invalid (totals)	1104	Address out of range

4.2.3 FINS client protocol

Trajexia can initiate the FINS communication using the **FINS_COMMS** BASIC command. Refer to the command description for details.

Both the Read Memory (0101) and the Write Memory (0102) commands are supported.

This functionality is useful to communicate with an OMRON PLC, another Trajexia system or a PC running FINS server application software.

With the Read Memory command, memory can be read from other devices with FINS server capability. The Write Memory command can be used to write data to devices with FINS server capability.
The command returns one of the following values, depending on the outcome of the execution:

-1 The command executed successfully.

0 The command failed.

1 Request was not sent because the client or the FINS protocol is busy.

2 One or more of the request parameters is invalid.

3 Invalid source memory area.

4 Request was sent, but no response from the remote server was received within the timeout period.

5 An error response code was received from the remote server.

4.2.4 ModbusTCP protocol

Modbus is a serial communication protocol published by Modicon. Versions of this protocol exist for serial port and for Ethernet connection over TCP/IP. Trajexia supports ModbusTCP as a slave, which means Trajexia can respond to communication requests, but it cannot initiate the communication itself.
A subset of the Modbus communication functions is implemented in Trajexia. The functions supported are shown in the table below.

Function number		Function name
Decimal	**Hexadecimal**	
1	1	Read Coils
2	2	Read Discrete Inputs
3	3	Read Holding Registers
5	5	Write Single Coil
6	6	Write Single Register
16	10	Write Multiple Registers
23	17	Read/Write Multiple Registers

When the Modbus Discrete Input functions are used, Trajexia accesses the digital inputs. When the Modbus Coil functions are used, Trajexia accesses the digital outputs. When the Modbus Holding Registers functions are used, Trajexia accesses the VR or TABLE memory area. Which memory area accessed is defined by a parameter of the **ETHERNET** command. Refer to section 3.2.130 for more information on this command.
To access the VR memory area, execute the command **ETHERNET(1,-1,9,0)**. This is the default setting at power-up. To access the TABLE memory area, execute the command **ETHERNET(1,-1,9,1)**.
Trajexia can exchange data in the holding registers via the ModbusTCP protocol. Trajexia supports 16-bit signed integer values and 32-bit IEEE floating point values. The data format used is defined by a parameter of the **ETHERNET** command. To exchange holding registers values as 16-bit signed integers, execute the command **ETHERNET(1,-1,7,0)**. This is the default setting at power-up. To exchange holding registers values as 32-bit IEEE floating point, execute the command **ETHERNET(1,-1,7,1)**.
More information on the Modbus protocol and the communication messages format can be found in the MODBUS APPLICATION PROTOCOL SPECIFICATION document, which can be downloaded at http://www.Modbus-IDA.org.

4.2.5 EtherNet/IP protocol

EtherNet/IP is an industrial multi-vendor network that uses Ethernet components. The EtherNet/IP specifications are open standards managed by the ODVA (Open DeviceNet Vendor Association), just like DeviceNet. EtherNet/IP is not just a network between controllers; it is also used as a field network. Since EtherNet/IP uses standard Ethernet technology, various general-purpose Ethernet devices can be used in the network.
The EtherNet/IP protocol supports implicit communications, which allows cyclic communications with EtherNet/IP devices. Data can be exchanged at high speed between Controllers and devices. TJ2-MC__ can exchange a maximum of 512 bytes per end-point.
The meaning of the data is defined when the connection between the client and server end-points is established.
The client opens a connection with an endpoint on the server (the Controller). The type of data exchanged is determined by defining the endpoint on the Controller. The CIP Assembly object, instances 100 (input to the Controller) and 101 (output from the Controller) are used and mapped to the required **VR** or TABLE memory on the Controller. This mapping is defined at run-time using the **ETHERNET** command.
The memory area on the controller with which the endpoint is associated, and the format of the data exchanged is determined by configuring parameters on the endpoint using the ETHERNET command.

The ETHERNET command function index '14' is used to access the endpoints, as follows:
ETHERNET(action, unit_number, function, endpoint_id, parameter_index [,parameter_value])

- **action**
  0 = Read, 1 = Write.
- **unit_number**
  -1
- **function**
  14
- **endpoint_id**

Index	Value	Description
1	Assembly Object, Instance 100	Input to the controller
2	Assembly Object, Instance 101	Output from the controller

- **parameter_index**, parameter_value

parameter_index		parameter_value	
Value	**Description**	**Value**	**Description**
0	Address	--	Start address (default = 0)
1	Data type	3	VR (default)
		4	TABLE
2	Data format	0	16 bit integer (default) (2 byte element)
		1	32 bit integer (4 byte element)
		2	32 bit floating point (4 byte element)

Examples
Set endpoint 1 to VR data type, and data format to 32 bit floating point:
ETHERNET(1,-1,14,1,1,3)
ETHERNET(1,-1,14,1,2,2)
Change input address to 100:
ETHERNET(1,-1,14,1,0,100)

4.3 Serial protocol

The TJ2-MC__ has a DB-9 connector that contains two serial ports:
- Port 1: RS232
- Port 2: RS422 or RS485, depending on the switch settings

See the Trajexia Hardware Reference manual for details.

Both ports can independently support these protocols:
- Host Link master
- Host Link slave
- ModbusRTU slave
- User defined protocol

NOTE
The serial port (port 1) CANNOT be used for programming the unit.

4.3.1 Host Link master

If the TJ2-MC__ is the Host Link master, you can send BASIC commands to a Host Link slave, for example a PC. When you send a BASIC command to a Host Link slave, the execution of the next BASIC command waits until the Host Link slave sends a response.

You can use these BASIC commands:

BASIC command	Description
HLM_COMMAND	**HLM_COMMAND** executes a specific Host Link command to the slave.
HLM_READ	**HLM_READ** reads data from the Host Link slave to either VR or TABLE memory.
HLM_STATUS	**HLM_STATUS** gives the status of the last command of the Host Link master.
HLM_TIMEOUT	**HLM_TIMEOUT** defines the Host Link master timeout time.
HLM_WRITE	**HLM_WRITE** writes data to the Host Link slave from either VR or TABLE memory.
SETCOM	**SETCOM** configures the serial communication port and enables the Host Link protocols.

Commands

These Host Link commands are supported for the Host Link Master protocol:

Type	Header code	Name	Function
I/O memory reading	**RR**	**CIO AREA READ**	Reads the specified number of words beginning with the designated **CIO/IR** word.
	RL	**LR AREA READ**	Reads the specified number of words beginning with the designated **LR** word.
	RH	**HR AREA READ**	Reads the specified number of words beginning with the designated **HR** word.
	RD	**DM AREA READ**	Reads the specified number of words beginning with the designated **DM** word.
	RJ	**AR AREA READ**	Reads the specified number of words beginning with the designated **AR** word.
	RE	**EM AREA READ**	Reads the specified number of words beginning with the designated **EM** word.

Type	Header code	Name	Function
I/O memory writing	**WR**	**CIO AREA WRITE**	Writes the specified data in word units beginning with the designated **CIO/IR** word.
	WL	**LR AREA WRITE**	Writes the specified data in word units beginning with the designated **LR** word.
	WH	**HR AREA WRITE**	Writes the specified data in word units beginning with the designated **HR** word.
	WD	**DM AREA WRITE**	Writes the specified data in word units beginning with the designated **DM** word.
	WJ	**AR AREA WRITE**	Writes the specified data in word units beginning with the designated **AR** word.
	WE	**EM AREA WRITE**	Writes the specified data in word units beginning with the designated **EM** word.
CPU unit status	**SC**	**STATUS WRITE**	Changes the operating mode of the CPU unit.
Testing	**TS**	**TEST**	Returns, unaltered, a single block that was sent from the master.
PC model code reading	**MM**	**PC MODEL READ**	Reads the model code of the CPU unit
Host Link communications processing	**XZ**	**ABORT** (command only)	Aborts the operation that is performed by a Host Link command, and returns to the initial status.
	**	**INITIALIZE** (command only)	Initializes the transfer control procedures for all Host Link units.
	IC	Undefined command (response only)	This is the response when the command header code is invalid.

NOTE
The Host Link protocol supports only C commands. It does not support FINS.

The Host Link Master protocol supports the commands only in single frame. The following table shows how you can use the Host Link protocol with the BASIC commands, and for which CPU unit operating mode (RUN, MON or PROG) the command is valid.

Header code	Name	BASIC command required	RUN	MON	PRG
RR	**CIO AREA READ**	**HLM_READ**	Valid	Valid	Valid
RL	**LR AREA READ**	**HLM_READ**	Valid	Valid	Valid
RH	**HR AREA READ**	**HLM_READ**	Valid	Valid	Valid
RD	**DM AREA READ**	**HLM_READ**	Valid	Valid	Valid
RJ	**AR AREA READ**	**HLM_READ**	Valid	Valid	Valid
RE	**EM AREA READ**	**HLM_READ**	Valid	Valid	Valid
WR	**CIO AREA WRITE**	**HLM_WRITE**	Not valid	Valid	Valid
WL	**LR AREA WRITE**	**HLM_WRITE**	Not valid	Valid	Valid
WH	**HR AREA WRITE**	**HLM_WRITE**	Not valid	Valid	Valid
WD	**DM AREA WRITE**	**HLM_WRITE**	Not valid	Valid	Valid
WJ	**AR AREA WRITE**	**HLM_WRITE**	Not valid	Valid	Valid
WE	**EM AREA WRITE**	**HLM_WRITE**	Not valid	Valid	Valid
SC	**STATUS CHANGE**	**HLM_COMMAND**	Valid	Valid	Valid
TS	**TEST**	**HLM_COMMAND**	Valid	Valid	Valid
MM	**PC MODEL READ**	**HLM_COMMAND**	Valid	Valid	Valid
XZ	**ABORT** (command only)	**HLM_COMMAND**	Valid	Valid	Valid
**	**INITIALIZE** (command only)	**HLM_COMMAND**	Valid	Valid	Valid
IC	Undefined command (response only)	-	Valid	Valid	Valid

CAUTION
You must execute the Host Link master commands from one program task only to avoid any multi-task timing problems.

CAUTION
The Host Link master commands provide the tools to exchange data with the Host Link slave. The user program must contain proper error handling routines to deal with communication failure and perform retries if necessary.

End codes

These are the end codes defined in the **HLM_STATUS** parameter:

End code	Description	Probable cause	Solution
$00	Normal completion	No problem exists.	N/A
$01	Not executable in RUN mode	The command that was sent cannot be executed when the PC is in RUN mode.	Check the relation between the command and the PC mode.
$13	FCS error	The FCS is wrong.	Influence from noise, transfer the command again.
$14	Format error	• The command format is wrong. • A command that cannot be divided has been divided. • The frame length is smaller than the minimum length for the applicable command.	Check the format and transfer the command again.
$15	Entry number data error	The data is outside the specified range or too long.	Correct the command arguments and transfer the command again.
$18	Frame length error	The maximum frame length of 131 bytes is exceeded.	Check the command and transfer the command again.
$19	Not executable	You did not obtain access rights.	Obtain access rights.
$21	Not executable due to CPU error.	The command cannot be executed because a CPU error has occurred.	Cycle the power supply of the CPU.
$100	Host Link slave ACK timeout	-	-
$200	IC command address error	-	-

Set up

You need the **SETCOM** command to set up the serial port of the TJ2-MC__ for the Host Link Master protocol. Set the command as follows:

SETCOM(baudrate, data_bits, stop_bits, parity, port, 6)

After you have set this command, you can use the **HLM_READ**, **HLM_WRITE** and **HLM_COMMAND** commands to read and write data using Host Link.

Timeout

The timeout mechanism is implemented to prevent that the BASIC task pauses for a long time due to bad or no communication. The **HLM_TIMEOUT** parameter specifies the timeout period. This period is the maximum time the program task waits after it has sent the command to receive a response.
If the timeout period elapses, the **HLM_STATUS** contains the status of the command, and the BASIC task continues.
The **HLM_TIMEOUT** parameter specifies the timeout period for all commands and for all ports.

Status

The **HLM_STATUS** parameter contains the status of the last Host Link master command sent to the specified port. The parameter indicates the status for the **HLM_READ**, **HLM_WRITE** and **HLM_COMMAND** commands. The status bits are:

Bit	Name	Description
0-7	End code	The end code is: • the end code defined by the Host Link slave, when a problem occurred in the data string of the sent command, or • an end code defined by the Host Link master, when a problem occurred in the data string of the received response.
8	Timeout error	A timeout error occurs if no response is received within the timeout period. This indicates that the communication is lost.
9	Command not recognised	This status indicates that the slave did not recognise the command and has returned an IC response.

The HLM_STATUS has value 0 when no problems occurred. In case of a non-zero value you need to program an appropriate action such as a retry or emergency stop in the user BASIC program. Each port has an HLM_STATUS parameter. You need the **PORT** modifier to specify the port.

Examples

In these examples we assume this set-up:

- A Trajexia system with a TJ2-MC__.
- A slave PC, with node address 13.
- A connection from the serial port of the TJ2-MC__ to the PC. The serial port uses RS422 communication.

Example: Reading data from the PC using **HLM_READ**.

BASIC code:

```
' Set up Host Link master for port 2
SETCOM(9600,7,2,2,2,6)

' Source address: CIO/IR 002
' Amount of data: 2 words
' Destination address: VR(0)
HLM_READ(2,13,PLC_IR,2,2,MC_VR,0)
```

Host Link communication:

- From Host Link master to Host Link slave: @13RR0002000242*
- From Host Link slave to Host Link master: @13RR000101010241*

Result:

- VR address = 0: value = 257.0000
- VR address = 1: value = 258.0000

Example: Writing data to the PC using **HLM_WRITE**.

BASIC code:

```
' Source address: TABLE(18)
' Amount of data: 2 words
' Destination address: LR 014
TABLE(18,$0701,$0702)
HLM_WRITE(2,13,PLC_LR,14,2,MC_TABLE,18)
```

Host Link communication:

- From Host Link master to Host Link slave: @13WL0014070107025F*
- From Host Link slave to Host Link master: @13WL0059*

Result:

- LR address = 0: value = 701 (hex)
- LR address = 1: value = 702 (hex)

Example	Send **TS** (test) command to PC using **HLM_COMMAND**.
BASIC code	**HLM_COMMAND(HLM_TEST,2,13)**
Host Link communication	• From Host Link master to Host Link slave: @13TSMCW151 TEST STRING2A* • From Host Link slave to Host Link master: @13TSMCW151 TEST STRING2A*
Result	**HLM_STATUS PORT(2) = 0**, which implies correct communication.

Example	Set PC in MON mode using **HLM_COMMAND**.
BASIC code	**HLM_COMMAND(HLM_STWR,2,13,2)**
Host Link communication	• From Host Link master to Host Link slave: @13SC0250* • From Host Link slave to Host Link master: @13SC0052*
Result	The PC runs in MON mode. Note that this is necessary for writing data to the PC using **HLM_WRITE**.

Example	Reading PC model code using **HLM_COMMAND** (timeout).
BASIC code	**HLM_TIMEOUT=500** **' Destination address: VR(100)** **HLM_COMMAND(HLM_MREAD,2,13,MC_VR,100)**
Host Link communication	• From Host Link master to Host Link slave: @13MM42* • From Host Link slave to Host Link master: no response
Result	Because the master has not received a response from the PC, **HLM_STATUS PORT(2)** has value 256 (bit 8 is set) after 500 servo cycles.

4.3.2 Host Link slave

If the TJ2-MC__ is the Host Link slave, a Host Link master (for example, a programmable terminal) can read data from the TJ2-MC__ and write data to it. The mapping between the slave and the master is:

TJ2-MC__ memory	Host Link mapping	Address range
VR	**CIO**	0 to 1023
TABLE	**DM**	0 to 63999

You can use these BASIC commands:

BASIC command	Description
SETCOM	**SETCOM** configures the serial communication port, and it enables the Host Link protocols.
HLS_NODE	**HLS_NODE** defines the slave unit number for the Host Link Slave protocol.
HLS_MODEL	**HLS_MODEL** defines the TJ2-MC__ model code for the Host Link Slave protocol.

Commands

The commands supported for the Host Link Slave protocol are given in the table below. The protocol supports single frame transfer and multiple frame transfer.

Type	Header code	Name	Function
I/O memory reading	**RR**	**CIO AREA READ**	Reads the specified number of words from VR memory beginning with the designated word.
	RD	**DM AREA READ**	Reads the specified number of words from TABLE memory beginning with the designated word.

Type	Header code	Name	Function
I/O memory writing	**WR**	**CIO AREA WRITE**	Writes the specified data in word units to VR memory beginning with the designated word.
	WD	**DM AREA WRITE**	Writes the specified data in word units to TABLE memory beginning with the designated word.
Testing	**TS**	**TEST**	Returns, unaltered, a single block that was sent from the master.
PC model code reading	**MM**	**PC MODEL READ**	Reads the model code of the TJ2-MC__ as specified by the **HLS_MODEL** parameter.
I/O memory area registration and reading	**QQMR**	**REGISTER I/O MEMORY**	Registers the I/O TABLE with the contents of the actual I/O configuration
	QQIR	**READ I/O MEMORY**	Reads the registered I/O memory words/bits all at once.
Host Link communications processing	**XZ**	**ABORT** (command only)	Aborts the operation that is performed by a Host Link command, and returns to the initial status.
	**	**INITIALIZE** (command only)	Initializes the transfer control procedures for all Host Link units.
	IC	Undefined command (response only)	This is the response when the command header code is invalid.

End codes

These are the response end codes that are returned in the response frame:

End code	Description	Probable cause	Solution
0	Normal completion	No problem exists.	N/A
13	FCS error	The FCS is wrong.	Check the FCS calculation method. If there was influence from noise, transfer the command again.
14	Format error	• The command format is wrong. • A command that cannot be divided has been divided. • The frame length is smaller than the minimum length for the applicable command.	Check the format and transfer the command again.
15	Entry number data error	The data is outside the specified range or too long.	Correct the command arguments and transfer the command again.
18	Frame length error	The maximum frame length of 131 bytes is exceeded.	Check the data and transfer the command again.
19	Not executable	An I/O memory batch was executed when items to read were not registered.	Register items to read before attempting batch read.
A3	Aborted due to FCS error in transmission data	An FCS error occurred in the second or later frame.	Correct the command data and transfer the command again.
A4	Aborted due to format error in transmission data	The command format did not match the number of bytes in the second or later frame.	Correct the command data and transfer the command again.
A5	Aborted due to entry number data error in transmission data	There was an entry number data error in the second or later frame or a data length error.	Correct the command data and transfer the command again.

End code	Description	Probable cause	Solution
A8	Aborted due to frame length error in trans-mission data	The length of the second or later frames exceeded the maximum of 128 bytes.	Correct the command data and transfer the command again.

Set up

You need the **SETCOM** command to set up the serial port of the TJ2-MC__ for the Host Link Slave protocol. Set the command as follows:

SETCOM(baudrate, data_bits, stop_bits, parity, port, 5)

After you have set this command, the TJ2-MC__ responds to Host Link commands from the master with the specified node number. You can set this node number with the **HLS_NODE** parameter.

Example

In this example we assume this set-up:

- A Trajexia system with a TJ2-MC__.
- An NS8 programmable terminal.
- A connection from the serial port of the TJ2-MC__ to the programmable terminal. The serial port uses RS232C communication.

Example	Configuration of the Host Link slave.
BASIC code	**' Define Host Link slave node** **HLS_NODE = 15** **' Define Host Link slave model code** **HLS_MODEL = $FA** **' Set up Host Link slave for port 1** **SETCOM(9600,7,2,2,1,5)**
Result	The TJ2-MC__ can communicate with the programmable terminal.

4.3.3 ModbusRTU

The ModbusRTU protocol provides single point to point communication between the TJ2-MC__ and a ModbusRTU master. Implementation of the protocol is provided on serial port 1 for RS232 and port 2 for RS485. Baud rate and slave address can be set in the BASIC program during serial port initialisation.
The Modbus protocol is initialised by setting the mode parameter of the **SETCOM** instruction to 4. The **ADDRESS** parameter must also be set before the Modbus protocol is activated.

Example

```
ADDRESS=1
SETCOM(9600,8,1,2,1,4) 'Port 1 as MODBUS port at 9600 baud
ADDRESS=1
SETCOM(19200,8,1,2,2,4) 'set up the RS485 port at 19200 baud
```

The protocol can be de-selected by setting the option to 0 in the SETCOM command.

```
SETCOM(19200,8,1,2,2,0) 'set the RS485 port to normal mode.
```

Functions

The following Modbus functions are supported:

Code	Function name	Action
1	Read Coil Status	Read I/O
2	Read Input Status	Read I/O
3	Read Holding Registers	Read VR variables or TABLE memory in both integer or IEEE floating point format
5	Force Single Coil	Write I/O
6	Set Single Holding Register	Write to a VR variable or a TABLE location in both integer or IEEE floating point format
16	Set Multiple Holding Registers	Write to multiple VR variables or TABLE loca-tions in both integer or IEEE floating point format
23	Read & Write Multiple Holding Registers	in both integer or IEEE floating point format

4.3.4 User-defined protocol

You can implement a user-defined communication protocol with these commands:

BASIC command	Description
SETCOM	**SETCOM** configures the serial communication port, and it enables the Host Link protocols.
GET	**GET** assigns the ASCII code of a received character to a variable.
INPUT	**INPUT** assigns numerical input string values to the specified variables.
KEY	**KEY** returns **TRUE** or **FALSE**, when a character has been received or has not been received.
LINPUT	**LINPUT** assigns the ASCII code of received characters to an array of variables.
PRINT	**PRINT** outputs a series of characters to a serial output device.

Example

Assume a set-up with:

- A Trajexia system with a TJ2-MC__.
- An OMRON Vision system F500.
- A connection from the serial port of the TJ2-MC__ to the F500. The serial port uses RS232 (port 1) communication.

This program sends a Vision command through the serial port, reads the response from the Vision system, writes it to VR variables and prints the results in the Terminal window of Trajexia Tools.

```
' In the STARTUP program
' Setting RS232 port for the vision system
SETCOM(38400,8,1,0,1,0)
' In the application program
loop:
   ' Trigger, rising edge in virtual system
   WAIT UNTIL IN(30)=0
   WAIT UNTIL IN(30)=1
   ' Clear screen
   PRINT CHR(27);"[2J"

   ' Clear buffer
   GOSUB clear_buffer

   ' Send command to the serial port according to VR(10)
   IF vision_command=v_measure THEN
      PRINT #1, "M"
      PRINT ">> M"
   ELSEIF vision_command=v_date THEN
      PRINT #1, "DATE"
      PRINT ">> DATE"
   ELSEIF vision_command=v_scene THEN
      PRINT #1,"SCENE ";scene_n
      PRINT ">> SCENE"
   ENDIF

   'Check response
   GOSUB read_buffer

GOTO loop
   read buffer:
   count=0
   resp_status=0
   k=-1
   TICKS=5000
   REPEAT
      IF KEY#1 THEN
         count=count+1
         GET#1, k
         'PRINT k;count
         TABLE(count,k)
         'PRINT count
      ENDIF
   UNTIL TICKS<0 'OR k=13
```

```
   PRINT "Received ";count[0];" characters"
   FOR i=1 TO count
      IF TABLE(i)<>13 THEN
         PRINT CHR(TABLE(i))
      ELSE
         PRINT "'cr'"
      ENDIF
   NEXT i
   IF TICKS<0 THEN
      PRINT "Timeout in the communication with the F500"
      resp_status=3
   ELSEIF TABLE(count-2)=79 AND TABLE(count-1)=75 THEN
      PRINT "Response OK"
      resp_status=1
   ELSE
      PRINT "Response Uncorrect"
      resp_status=2
   ENDIF
   PRINT "Response Status is :";resp_status[0]
RETURN
clear_buffer:
   PRINT "Clearing..."
   WHILE KEY#1
      GET#1,k
      PRINT k
   WEND
   PRINT "Cleared!!"
RETURN
```

4.4 PROFIBUS

4.4.1 Introduction

PROFIBUS is an international open fieldbus standard. The Trajexia TJ1-PRT enables the Trajexia system to communicate with a PROFIBUS network. It exchanges data between the PROFIBUS master and the TJ2-MC__. For this, it uses the Trajexia VR variables.

4.4.2 Communication set-up

The TJ1-PRT has two node number selectors. You can use the node number selectors to assign a PROFIBUS network address to the TJ1-PRT. You must assign an address to the TJ1-PRT before you set the power of the Trajexia system on.

To initialise the TJ1-PRT, use the BASIC **PROFIBUS** command:

PROFIBUS(unit_number, 2, 1, output_start, output_count, input_start, input_count)

where:
- **unit_number** is the number of the TJ1-PRT unit.
- **output_start** is the start address of the output data range of VR variables.
- **output_count** is the number of VR variables in the output data range, maximum 122 variables.
- **input_start** is the start address of the input data range of VR variables.
- **input_count** is the number of VR variables in the input data range, maximum 122 variables.

After you have executed the command **PROFIBUS(unit_number, 2, ...)**, data arrays are automatically exchanged. The data exchanged between the TJ1-PRT and the PROFIBUS master is in 16-bit integer format. Each word exchanged ranges from -32768 to 32767.

A VR variable can hold a 53-bit number, and it can also hold fragments. The exchange with the PROFIBUS master does not support values outside the range -32768..32767 and fragments.

An example sequence to configure the TJ1-PRT unit, is as follows:

1. Set the unit number with the two rotary switches of the TJ1-PRT unit.
2. Switch on the power to the system. The **RUN** LED lights. The **ERH** LED flashes.
3. Create a BASIC Program containing the command **PROFIBUS(2,2,1,10,7,150,3)**. In this example the system initializes a TJ1-PRT unit with unit number 2. The system sends seven output words from the master to the VR's 10 to 16 and three input words from the VR's 150 to 152 to the master.
4. If the configuration is successful, the **RUN** LED lights and the **COMM** LED lights. Communication is now active.

fig. 1

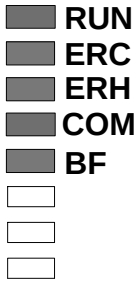

To configure the CJ1-PRM21 with the CX-PROFIBUS, do these steps:

1. Start the CX-PROFIBUS software tool.
2. Right-click the MyNetwork tree.
3. Select **Add Device...**.

fig. 2

4. Select the PROFIBUS master board.
5. Click **OK**.

fig. 3

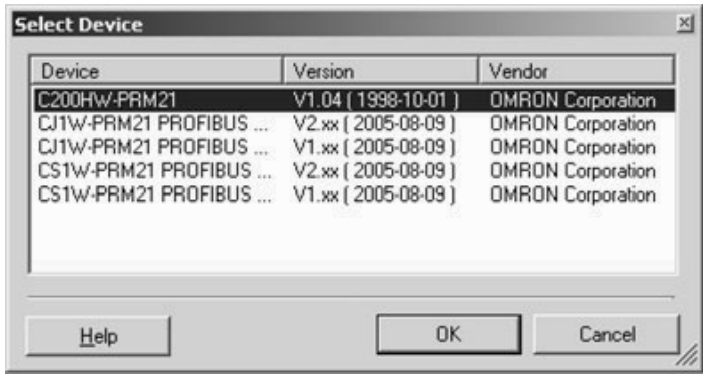

6. Open the **Device Catalogue** from the **View** menu.

fig. 4

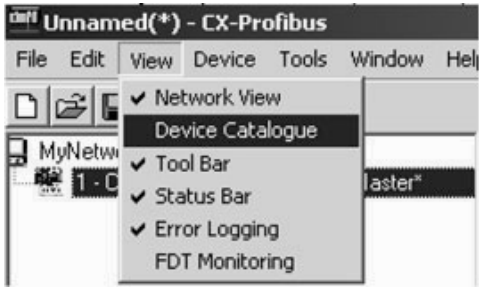

7. Click **Install GSD Files...**. The GSD file is on the Trajexia Tools CD. It can also be found in the Download Center on the OMRON website.
8. Click **Update**. The TJ1-PRT shows in the list.
9. Select the OMRON TJ1-PRT from the list and click **Add Device**.

fig. 5

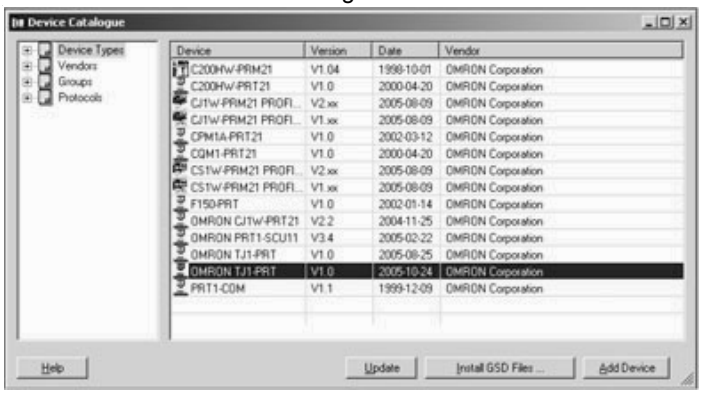

10. Double-click the TJ1-PRT slave module in the MyNetwork tree.
11. Set the node number in the **Station Address** field.
12. Add (**Insert**) input and output modules to the configuration list below.
13. Make sure that the quantity of input words and output words in the selected modules are equal to the quantity selected with the PROFIBUS command.
14. Click **OK**.

To configure the CJ1W-PRM21 with the CX-PROFIBUS, do these steps:

fig. 6

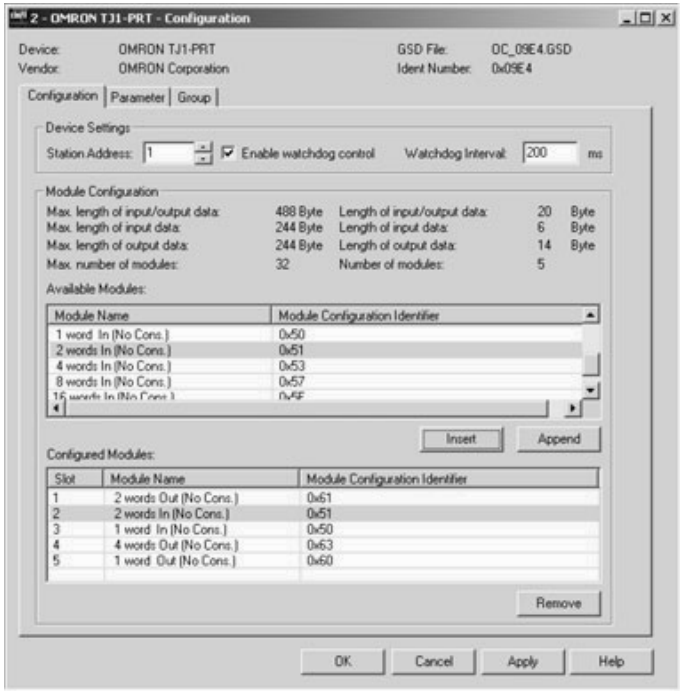

1. Double-click the master module in the MyNetwork tree.
2. Set the **Station Address** and **Unit Number**.

fig. 7

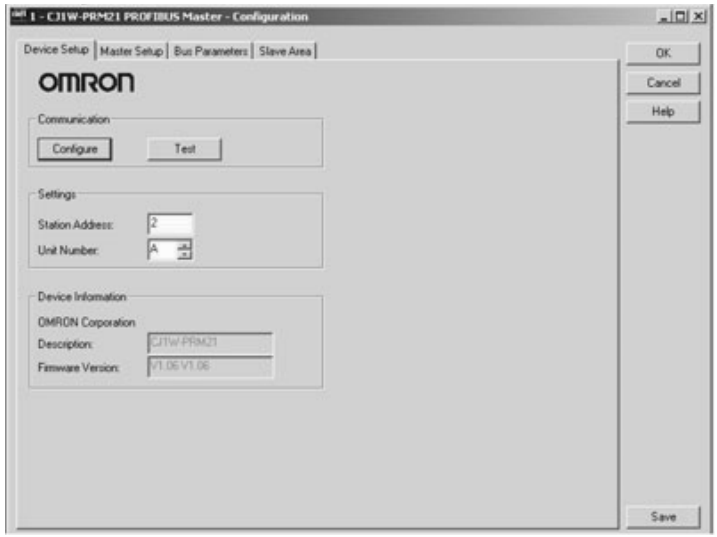

3. Select the **Slave area** tab.
4. Set the **Start Address** field of **Output Area 1** and **Input Area 1**.
5. Save the project.

fig. 8

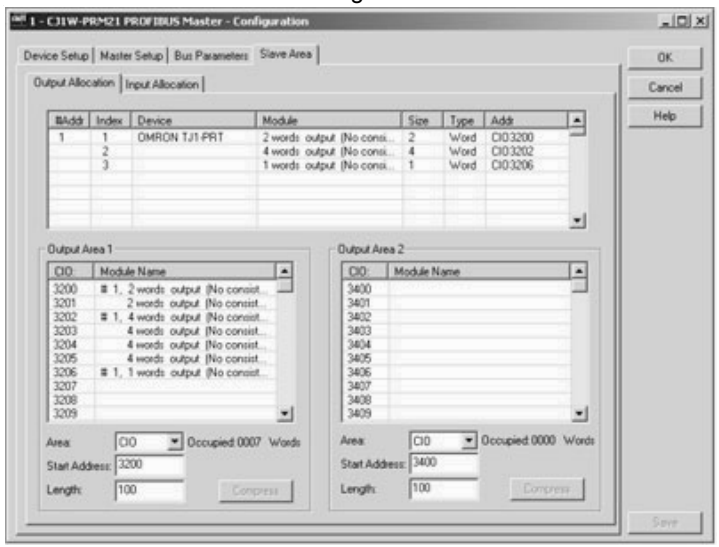

6. Click the **Device Online/Offline (Toggle)** toolbar button to go on-line.
7. Click the **Device Download** toolbar button to download the parameters.

fig. 9

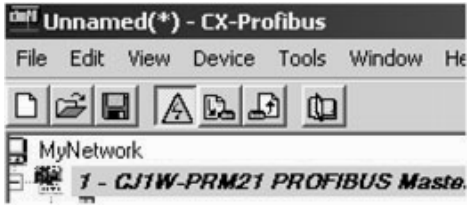

4.4.3 Communication Status

TJ1-PRT can provide status information to the TJ2-MC__. You can retrieve the status information in BASIC with the command **PROFIBUS** (unit_number,4,0). The result provides the following information:

Bit	Value	Description
0	0	Failed configuration of I/O data exchange
	1	I/O data exchange configured successfully
1	0	I/O data not available
	1	I/O data available
2	0	Data exchange active in OPERATE mode
	1	Data exchange active in CLEAR mode

4.5 DeviceNet

4.5.1 Introduction

DeviceNet is an international open fieldbus standard based on the CAN protocol. The TJ1-DRT enables the Trajexia system to communicate to a DeviceNet network. It exchanges data between a DeviceNet master and the TJ2-MC__. For this, it uses the Trajexia VR variables.

4.5.2 Communication set-up

The TJ1-DRT has two node number selectors. You can use the node number selectors to assign a node number to the TJ1-DRT.

The DeviceNet node numbers range from 0 to 63. If you select a node number with the node number selectors that exceeds this range, you will select the node number that is set by software. The nodes that enable software setting are 64 to 99.

To initialise the TJ1-DRT, use the BASIC **DEVICENET** command:

DEVICENET(unit_number, 2, 1, output_start, output_count, input_start, input_count)

where:
- **unit_number** is the number of the TJ1-DRT unit.
- **output_start** is the start address of the output data range of VR variables.
- **output_count** is the number of VR variables in the output data range, maximum 32 variables.
- **input_start** is the start address of the input data range of VR variables.
- **input_count** is the number of VR variables in the input data range, maximum 32 variables.

NOTE
If you use an OMRON DeviceNet master, it is advised to select either input_count or output_count with a value of 4,8,16, or 32 for the VR variables.

After you have executed the command **DEVICENET(unit_number, 2, ...)**, data arrays are automatically exchanged. The data exchanged between the TJ1-DRT and the DeviceNet master is in 16-bit integer format. Each word exchanged ranges from -32768 to 32767.

A VR variable can hold a 53-bit number, and it can also hold fragments. The exchange with the DeviceNet master does not support values outside the range -32768 to 32767 or fragments.

Configure the DeviceNet network
To configure the OMRON CJ1W/CS1W-DRM21 DeviceNet master to exchange VR variables with the Trajexia system, do these steps:

1. Start the CX-Integrater in the CX-ONE software tool.
2. Select Network from the Insert menu.
3. Select DeviceNet from the Select Network screen. The Network view shows.

fig. 10

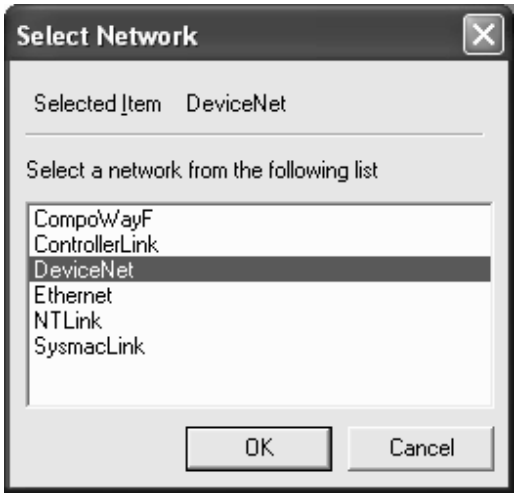

4. Select CJ1W-DRM21 from the OMRON Communication adapter list.

fig. 11

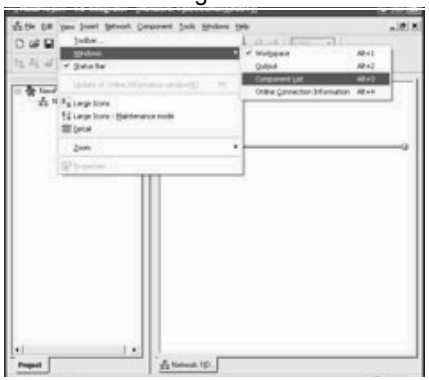

5. Drag and drop the CJ1W-DRM21 to the Network window.

fig. 12

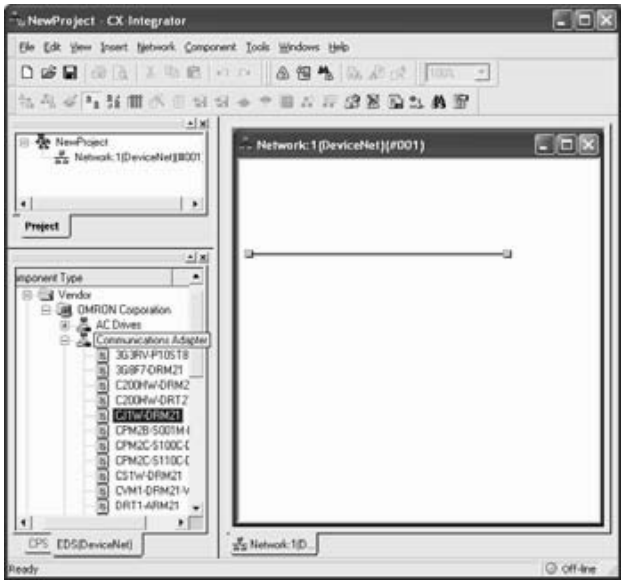

6. Install the **EDS** file from the CX-Integrator.
7. Select No from the dialog window. The icon is not needed.

fig. 13

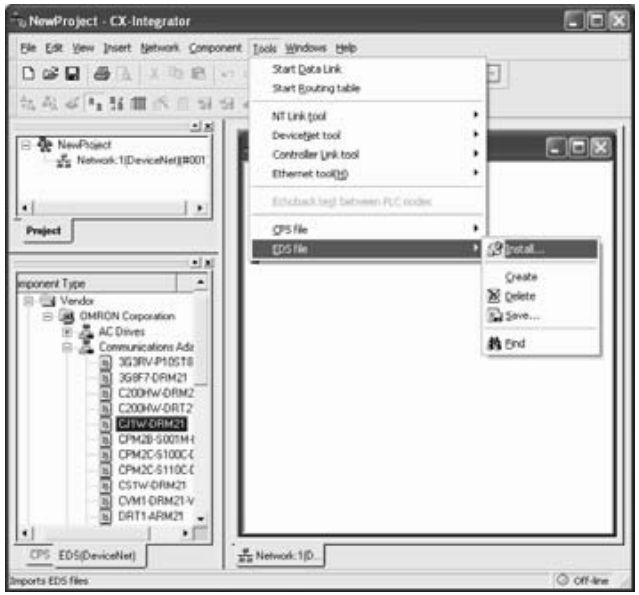

8. Register the slave to the master, right click on the #01TJ1-DRT icon.
9. Double click on the Master Icon.
10. Select the TJ1-DRT device.

fig. 14

11. Click Advanced Setup.
12. Click Connection tab.
13. Click User Setup.
14. Click Use Poll Connection.
15. Select Con.Path.
16. Select the number of variables that has been selected for the DeviceNet communication.
17. Click OK to confirm all dialog boxes.
18. Select Work Online from the Network menu.
19. Select Parameter from the Component menu.
20. Right click on the Master icon.
21. Select Parameter Download.

fig. 15

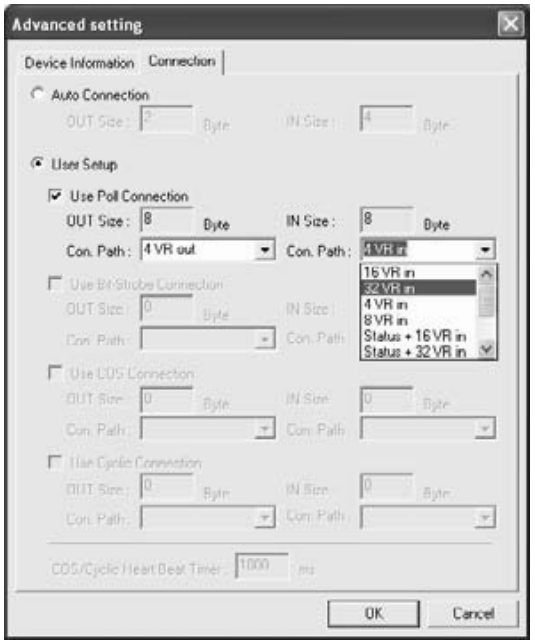

4.5.3 Communication Status

TJ1-DRT can provide status information to both the TJ2-MC__ and the DeviceNet master. You can retrieve the status information in BASIC with the command **DEVICENET(unit_number,4,0).** The result provides the following information:

Bit	Value	Description
0	0	DeviceNet (unit_number, 2, ...) not executed yet
	1	DeviceNet (unit_number, 2, ...) executed without error
1	0	No DeviceNet I/O connection
	1	DeviceNet I/O connection running
2	0	VR variables in the output data range have been updated
	1	VR variables in the output data range have not been updated yet
3	0	DeviceNet I/O connection size matches the Device-Net(unit_number,2,…) command
	1	DeviceNet I/O connection size does not match the Device-Net(unit_number,2,…) command
4-7	0	Always zero
8	0	Network power OK
	1	Network power failure
9	0	No BUSOFF occurred
	1	BUSOFF occurred
10	0	No node address duplication error
	1	Node address duplication error
11-	0	Reserved

You can retrieve the status information in the DeviceNet master by selecting a connection path that includes status information. The status information includes one bit. Bit 2 indicates that the network voltage has dropped below the level set in the TJ1-DRT DeviceNet parameters. You can set the TJ1-DRT DeviceNet parameters using a DeviceNet configurator. The default level is 11V.

4.6 CANopen

CANopen is a networking system based on the CAN (Controller Area Network) serial bus. The Trajexia CANopen Master Unit (TJ1-CORT) is an interface between the Trajexia system and up to 8 CANopen devices. It operates as the NMT (Network Management) master in the network.
The TJ1-CORT can communicate up to 8 PDOs (Process Data Objects) in each direction.

4.6.1 Communication setup

NOTE
To set up the CANopen communication, the user must have a basic knowledge of CANopen systems.

The TJ1-CORT is identified in the CANopen network by its node number. The node number can range from 1 to 99. The node number of the TJ1-CORT is set with the two node number selectors.
To initialize the TJ1-CORT, execute the **CAN_CORT** commands given below.

NOTE
The execution order of the **CAN_CORT** commands given below is important. Execute the commands in the order given below. If not, initialization errors can occur.

1. Initialize the TJ1-CORT: execute the command **CAN_CORT(unit,5,bit_rate)**.
2. Add the slave nodes to the network.
   To add a slave node to the TJ1-CORT, execute the command **CAN_CORT(unit,6,node_ID,mandatory_flag)**.
3. Add the TPDOs (Transmit PDOs) and RPDOs (Receive PDOs), and map them to the TJ2-MC__ memory.

To configure an RPDO, execute the command **CAN_CORT(unit,7,PDO_number,area_type,start_address,COB_ID, obj_type, obj_type,...)**
To configure a TPDO, execute the command **CAN_CORT(unit,8,PDO_number,area_type,start_address,COB_ID, inhibit_time,event_timer,obj_type, obj_type,...)**

4. The write operations defined with the command **CAN_CORT(unit,9,node_ID,index,subindex,byte1,byte2,...)** are executed at each network startup. Note the following:
   - Execute this command for each CANopen object that must be configured.
   - Do the configuration for the TJ1-CORT first, before the configuration of the CANopen slaves.
   - Group the configuration commands for the CANopen slaves together per node.
   - It is possible that certain non-default settings are required for the TJ1-CORT or the CANopen slaves in the network. An example is to initialize the heartbeat consumption and production object entries.
   - It is highly recommended that the TJ1-CORT acts as the heartbeat consumer for all connected CANopen devices. Otherwise, the communication status will be incorrect.
5. Start the CANopen network and the mapping of the Trajexia memory to RPDOs and TPDOs: execute the command **CAN_CORT(unit,10)**.

An example is the configuration given in the figure.

Connection	PDO	COB-ID	Size	Mapping
(1)	TPDO0	$202	1 Byte	VR(100)
(2)	RPDO0	$1e3	1 Byte	VR(0)

fig. 16

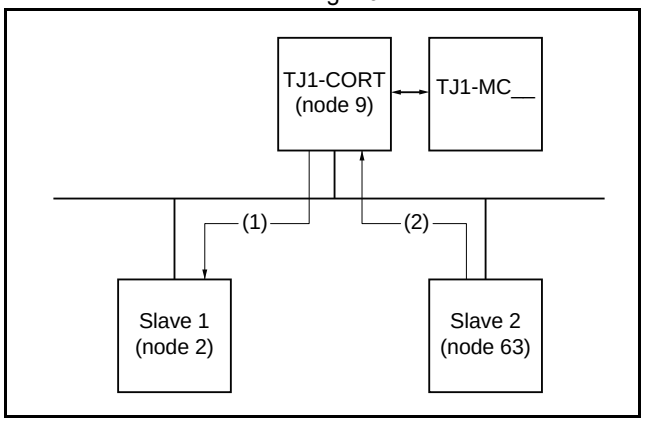

This results in the following script:

```
tot_result = TRUE
result = TRUE

'----------------------------------------
' Initialise
'----------------------------------------
result = CAN_CORT(0,5,4)
tot_result = tot_result AND result

IF tot_result = FALSE THEN
   PRINT "Initialise Fail"
   STOP
ENDIF

'----------------------------------------
' Add Nodes
'----------------------------------------
' Node ID 2
result = CAN_CORT(0,6,$2,1)
tot_result = tot_result AND result

' Node ID 63
result = CAN_CORT(0,6,$63,1)
tot_result = tot_result AND result

IF tot_result = FALSE THEN
   PRINT "Add Nodes Fail"
   STOP
ENDIF

'----------------------------------------
' Add TPDO / RPDO
'----------------------------------------
' Map TPDO 0 to VR(100)
result = CAN_CORT(0,8,0,1,100,$202,0,0,5)
tot_result = tot_result AND result

' Map RPDO 0 to VR(0)
result = CAN_CORT(0,7,0,1,0,$1e3,5)
tot_result = tot_result AND result

IF tot_result = FALSE THEN
   PRINT "Add TPDO / RPDO Fail"
   STOP
ENDIF

'----------------------------------------
' Slave Config Settings
'----------------------------------------

' Node 9 (TJ1-CORT)
' Set Heartbeat consumption
result = CAN_CORT(0,9,$9,$1016,1,0,$2,0,$D0)
tot_result = tot_result AND result
result = CAN_CORT(0,9,$9,$1016,1,0,$63,0,$D0)
tot_result = tot_result AND result

' Node 2
' Set Heartbeat production
result = CAN_CORT(0,9,$2,$1017,0,0,$C8)
tot_result = tot_result AND result

' Additional settings
result = CAN_CORT(0,9,$2,$2001,1,$f)
tot_result = tot_result AND result

' Node 63
' Set Heartbeat production
result = CAN_CORT(0,9,$63,$1017,0,0,$C8)
tot_result = tot_result AND result
```

```
IF tot_result = FALSE THEN
   PRINT "Slave Config Settings Fail"
   STOP
ENDIF

'----------------------------------------
' Start Network
'----------------------------------------
result = CAN_CORT(0,10)
tot_result = tot_result AND result

IF tot_result = FALSE THEN
   PRINT "Start Network Fail"
   STOP
ENDIF

NIO = 64
```

4.6.2 Communication status

The TJ1-CORT can give status information to the TJ2-MC__. To retrieve this status information, use the BASIC command **CAN_CORT(unit,4,0)**. The result value of this command is given in the table below.

Bit	Value	Description
0	0	Mandatory slave is in correct state
	1	Mandatory slave is in unexpected state
1	0	Optional slave is in correct state
	1	Optional slave is in unexpected state
2	0	Input data does not contain valid data
	1	Input data contains valid data
3	0	No emergency messages received.
	1	One or more emergency message received
4	0	No fatal network error
	1	Fatal network error
5	0	No PDO length error
	1	PDO length error
8	0	No network power problem
	1	Network power lost
9	0	No CAN bus problem
	1	CAN bus in BUS OFF state
10	0	No duplicate node number in network
	1	Duplicate node number in network
12	0	No CAN bus error detected
	1	CAN bus error detected

4.6.3 Communication operation

When the communication is in progress, specific data can be exchanged with the **CAN_CORT** command.

1. To set the CANopen network state to pre-operational or operational, execute the command **CAN_CORT(unit,11,mode)**.
2. To read the value of an object of a CANopen node with an SDO (Service Data Object) command, execute the command **CAN_CORT(unit,12,node_ID,index,subindex,VR_address)**.
   Each byte of the return value occupies one VR address. The first address (**VR_address**) contains the SDO response byte. The data read starts at **VR_address** + 1.
   When the SDO response is not 0, the error information from the node unit starts at **VR_address** + 1.
3. To write a value to an object of a CANopen node with an SDO command, execute the command **CAN_CORT(unit,13,node_ID,index,subindex,VR_address,data_len)**.
   Each VR address is interpreted as one byte of the value that is written.
4. To read the EMCY (emergency message from a node, execute the command **CAN_CORT(unit,14,node_ID,VR_address)**.
   Each byte of the 8 bytes occupies 1 VR address.

4.7 MECHATROLINK-II

The MECHATROLINK-II protocol is a serial bus that is made to control motion in a deterministic way.

The number of MECHATROLINK-II devices determines the data exchange cycle time:

- For 1 to 4 devices the cycle time can be 0.5 ms, 1 ms or 2 ms.
- For 5 to 8 devices the cycle time can be 1 ms or 2 ms.
- For 9 to 16 devices the cycle time is 2 ms.

The cyclic transmission has two stages:

- The TJ1-ML__ sends the reference command to the MECHATROLINK-II slaves.
- The slaves send feedback and status information to the TJ1-ML__.

The MECHATROLINK-II uses a synchronization clock and broadcast messaging to make sure that all the slaves execute the commands at the same time.

In addition, other information is transferred at a lower rate, for example the reading and writing of parameters.

There are specific BASIC commands to address MECHATROLINK-II slave units directly.

- **DRIVE_CLEAR**: This command resets one alarm in a MECHATROLINK-II Servo Driver via a MECHATROLINK-II message.
- **OP(45,ON)**: This command sets to on one output in a remote MECHATROLINK-II I/O module.

4.8 GRT1-ML2 I/O mapping

The GRT1-ML2 SmartSlice I/O Unit is an interface for data exchange between a TJ1-ML__ MECHATROLINK-II Master Unit and SmartSlice I/O Units.
If you plan data exchange that requires strict control of the I/O timing, refer to appendix A. This appendix also contains some useful examples.

4.8.1 Unit numbers

The GRT1-ML2 must have a MECHATROLINK-II address to be identified on the MECHATROLINK-II network. With this address, the TJ2-MC__ connected to the TJ1-ML__ can exchange I/O data with the GRT1-ML2.

4.8.2 SmartSlice I/O mapping

The I/O data of the SmartSlice I/O Units is transferred to the TJ2-MC__ controller. Then the data is automatically mapped in the I/O memory of the TJ2-MC__. The mapping is determined by:

- The type of the SmartSlice I/O Unit
- The order of the SmartSlice I/O Units

The I/O data from GRT1-ML2 units is mapped in the TJ2-MC__ in order of the GRT1-ML2 addresses. For example, the I/O data of a GRT1-ML2 unit with address 67 hex is mapped before the I/O data of a GRT1-ML2 unit with address 68 hex.

The TJ2-MC__ allocates digital I/O points in blocks of 32 points.

NOTE
The GRT1-ML2 does not support the on-line configuration of SmartSlice I/O Units. However, other communications units can change the parameters of a SmartSlice I/O Unit and store this configuration in the SmartSlice I/O Unit.

NOTE
If the GRT1-ML2 configuration contains non-supported SmartSlice I/O Units or SmartSlice I/O Units configured to consume a non-default amount of I/O data, the MECHATROLINK-II connection to the GRT1-ML2 is refused, and it cannot be operated.

NOTE
The automatic I/O mapping of SmartSlice I/O Units in the examples given below assumes that each SmartSlice I/O Unit has the default I/O memory settings.

I/O mapping example 1

With a MECHATROLINK-II network as shown in the figure, the response of the system when the network is initialized[1] is:

GRT1-ML2: 67(32/8/6/0/2/0/2)

where:

- 67 is the GRT1-ML2 address (hexadecimal)
- 32 is the start address of the digital I/O
- 8 is the number of digital inputs
- 6 is the number of digital outputs
- 0 is the start address of the analog inputs
- 2 is the number of analog inputs
- 0 is the start address of the analog outputs
- 2 is the number of analog outputs

fig. 17

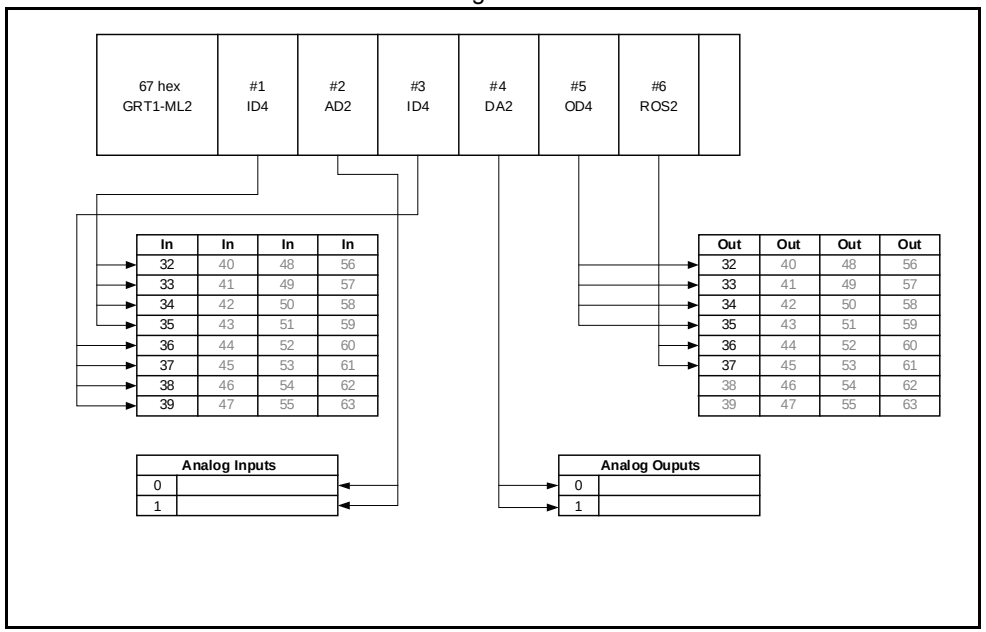

1. To initialize the network, execute the command **MECHATROLINK(unit,0)**, reset the system, or turn the power on.

I/O mapping example 2

The configuration of the GRT1-ML2 units in the example above is:

fig. 18

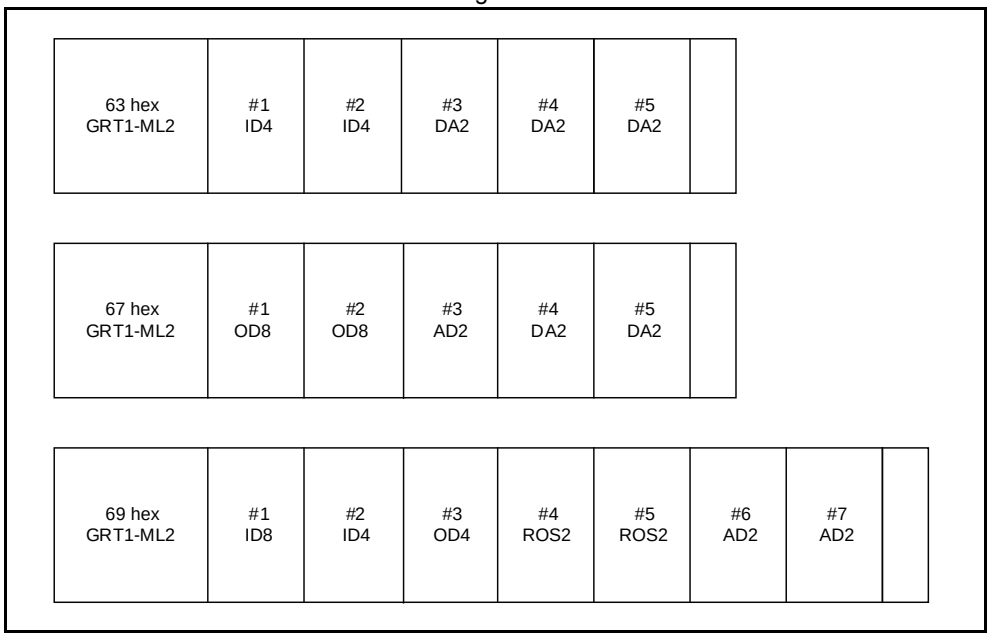

GRT1-ML2: 63(32/8/0/0/0/0/6)

where:
- 63 is the GRT1-ML2 address (hexadecimal)
- 32 is the start address of the digital I/O
- 8 is the number of digital inputs
- 0 is the number of digital outputs
- 0 is the start address of the analog inputs
- 0 is the number of analog inputs
- 0 is the start address of the analog outputs
- 6 is the number of analog outputs

GRT1-ML2: 67(64/0/16/0/2/6/4)

where:
- 67 is the GRT1-ML2 address (hexadecimal)
- 64 is the start address of the digital I/O
- 0 is the number of digital inputs
- 16 is the number of digital outputs
- 0 is the start address of the analog inputs
- 2 is the number of analog inputs
- 6 is the start address of the analog outputs
- 4 is the number of analog outputs

GRT1-ML2: 69(96/12/8/2/4/10/0)

where:
- 69 is the GRT1-ML2 address (hexadecimal)
- 96 is the start address of the digital I/O
- 12 is the number of digital inputs
- 8 is the number of digital outputs
- 2 is the start address of the analog inputs
- 4 is the number of analog inputs

- 10 is the start address of the analog outputs
- 0 is the number of analog outputs

Depending on the actual GRT1-ML2 configurations, gaps are introduced in the available digital I/O ranges. In the example above, the range of distributed digital inputs and outputs is [32–127], but there are gaps in the digital inputs in the ranges [40–95] and [108–127], and there are gaps in the digital outputs in the ranges [32–63], [80–95] and [104–127]. These digital inputs and outputs are virtual. Virtual digital inputs always have value 0 (OFF). Virtual outputs can be set ON or OFF and they can be used in programming, but they do not have a physical representation and cannot activate a device.

4.8.3 GRT1-ML2 status word

The GRT1-ML2 status flags give the status of the connection between the GRT1-ML2 and the SmartSlice I/O Units, and the status of the SmartSlice I/O Units. The status flags are 1 word in size. Their information is transferred to the TJ2-MC__ as part of the input data.
The table below gives the meaning of the bits in the status word.

Bit	Flag	Description
0	SmartSlice I/O Bus Communication Error	Monitors the status of SmartSlice I/O communication
1	–	Reserved
2	SmartSlice I/O Unit Warning 0: Normal 1: Error detected	Indicates a minor SmartSlice I/O Unit error. This flag goes ON when there is an error in any one of the connected SmartSlice I/O Units.
3	–	Reserved
4	SmartSlice I/O Unit Alarm 0: Normal 1: Error detected	Indicates a major SmartSlice I/O Unit error. This flag goes ON when there is an error in one of the connected SmartSlice I/O Units.
5–11	–	Reserved
12	Unit Maintenance 0: Normal 1: Error (monitor value reached)	Monitors the operating time threshold that is set with the Unit power ON time monitor function
13	Automatic Restore Monitor 0: Restore successful 1: Restore failed	Indicates whether or not the automatic parameter restore to the SmartSlice I/O Units was completed successfully
14	Communication Unit Error 0: Normal 1: Error occurred	This flag is ON if one of the other flags (bits 0 to 13) is ON
15	I/O Refreshing 0: I/O communication stopped 1: I/O communication normal	Indicates whether I/O data is exchanged normally

To read the status word, use the command

MECHATROLINK(unit,36,station,vr)

where:
- **unit** is the number of the MECHATROLINK-II Master Unit in the Motion Controller system
- **station** is the station address of the GRT1-ML2 set with the rotary switches
- **vr** is the VR memory address where the read status word is put. Use -1 to print the status word to the Command Line Terminal interface.

Every servo cycle the status word is checked and a bitwise AND is performed with the status word and the status error mask. If the result of this AND operation is not 0, the WDOG is switched off. This can be used to detect particular errors in GRT1-ML2 and stop the controller operation if they occur.

To set the status error mask, use the command

MECHATROLINK(unit,37,station,value)

where:
- **unit** is the number of the MECHATROLINK-II Master Unit in the Motion Controller system
- **station** is the station address of the GRT1-ML2 set with the rotary switches
- **value** is the value of the status error mask that must be set.

The status error mask value can be read back by means of the command

MECHATROLINK(unit,39,station,vr)

where the arguments of the command are the same as for the command **MECHATROLINK(unit,36,station,vr)**. The default value of the status error mask after the controller is turned on or reset is 4000 hex. This disables the WDOG when an error occurs in the GRT1-ML2. 4000 hex equals 0100 0000 0000 0000 binary. Bit 14 is the overall error bit, which is set to 1 when an error occurs.

4.8.4 Table registration

The table registration function registers the configuration of the SmartSlice I/O Units that are connected to the GRT1-ML2 in a table in the GRT1-ML2. This allows for a comparison of the actual configuration when the power is turned on with the registered configuration.
- To enable the registered table, make sure that unit dipswitch 1 (REGS) is set to ON before the power is turned on.
- To disable the registered table, make sure that unit dipswitch 1 (REGS) is set to OFF before the power is turned on. In this case, the GRT1-ML2 automatically detects the actual I/O configuration and starts the communication.

Create a new registration table

To register the table, make sure the power of the GRT1-ML2 and the SmartSlice I/O Units is on, and set unit dipswitch 1 (REGS) on the GRT1-ML2 from OFF to ON. If the registration table is refreshed, the old registration table is erased.

NOTE
It is recommended to register the I/O configuration table when all SmartSlice I/O Units are communicating, that is, when the TS LED is lit green.

The configuration information that is registered contains these items:
- The order of the SmartSlice I/O Units connected to the GRT1-ML2.
- The I/O size (input or output, number of bits) of each SmartSlice I/O Unit.

The configuration information does not contain the model numbers of the SmartSlice I/O Units.

Comparison of the actual configuration and the registered table

When unit dipswitch 1 is set to ON, an I/O configuration table is registered in the GRT1-ML2, and the GRT1-ML2 is turned on, the GRT1-ML2 automatically compares the actual I/O configuration and the registered table. If a registered SmartSlice I/O Unit cannot participate in he I/O communication, or if the GRT1-ML2 detects an unregistered SmartSlice I/O Unit, a verification error occurs. In this case, the concerned SmartSlice I/O Units do not participate in the I/O communication. The I/O communication starts with the other SmartSlice I/O Units.
The tables above give an example of a mismatch between the registered table and the actual configuration. The I/O data sizes of the third unit do not match. Therefore, a verification error occurs and the third unit does not participate in the communication.
The TS LED flashes red when a verification error occurs.

fig. 19

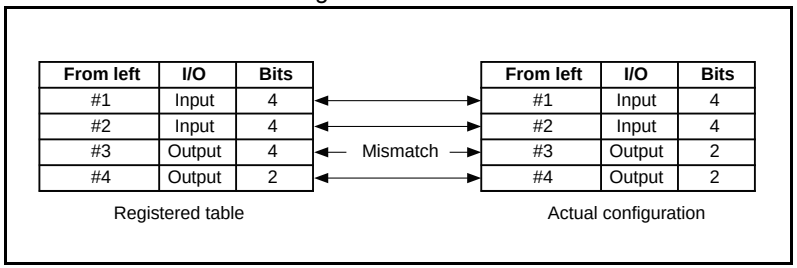

4.9 EtherCAT

EtherCAT is an Ethernet-based ultra-high-speed field bus system. It optimizes usage of the 100-Mbps duplex communications bandwidth to enable high-speed control of motor drives, including servo drives and inverters. It can also be used to control sensors, analog I/O, and other I/O in realtime, all using the same communications protocol.

CANopen over EtherCAT (CoE)

The controller exchanges data with the slave on EtherCAT using CANopen , an open network standard. CANopen over EtherCAT (CoE) is used as the communications protocol in EtherCAT communications. With CoE, the parameters and control data held by the slaves are specified using an object dictionary (OD), which is based on the CANopen standard.
To communicate the data between the controller/communications master and slaves, two methods are used: process data objects (PDOs), which periodically exchange data in realtime, and service data objects (SDOs), which exchange data when required. The controller uses PDO communications for commands to refresh data, such as data for servomotor position control, on a fixed control cycle. It uses SDO communications for commands to read and write data, such as for parameter transfers, at specified times.

Distributed Clock (DC)

EtherCAT uses distributed clocks (DCs) to ensure time synchronization in data exchange between the communications master and the slaves. The devices connected to EtherCAT share time information and synchronize the timing of device operations based on the distributed clock in each device. All devices perform control operations based on the distributed clocks to synchronize all devices. When the controller is used with Accurax G5-series Servo Drives, distributed clocks are used for synchronization.

Node addressing

Each node on the EtherCAT network will get a node address assigned. This address is used to assign an axis number (for Servo Drives) or to define the IO mapping (for IO). The address can be assigned in two ways:

- Automatically assigned: nodes not supporting address switches or address switches set to zero.
- Configured: nodes with address switches

In case of automatic address assignement, the address depends on the position of the node in the network. The node closests to the EtherCAT master will get the lowest address.
In case of configured addressing, the node address is based on the address set by the address switches.
Depending on the type of slave the node address is assigned as follows:

Servo Drives and Inverters

The node address of Servo Drives and Inverters are assigned as follows:

- Address switches set 01 to 99
  The address assigned is the same as the switch setting
- Address switches set 00 (or no address switches):
  The address assigned is the lowest address available after assigning fixed addresses.

Example 1:

Address switches of all Servo Drives set to 0.

- First Drive gets address 01 (auto) and axis 0 assigned
- Second Drive gets address 02 (auto) and axis 1 assigned
- Third Drive gets address 03 (auto) and axis 2 assigned

fig. 20

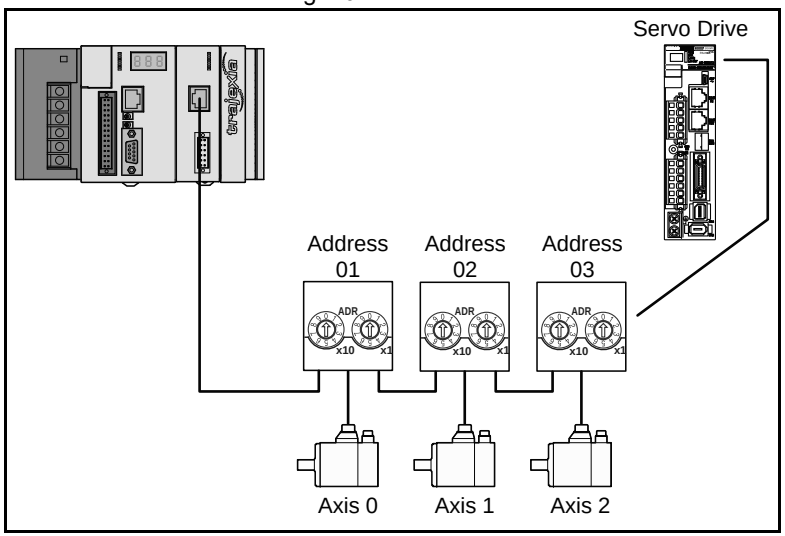

Example 2:

Rotary switches of all Servo Drives set to a unique configured address.

- First Drive gets address 04 (configured) and axis 3 assigned
- Second Drive gets address 05 (configured) and axis 4 assigned
- Third Drive gets address 01 (configured) and axis 0 assigned

fig. 21

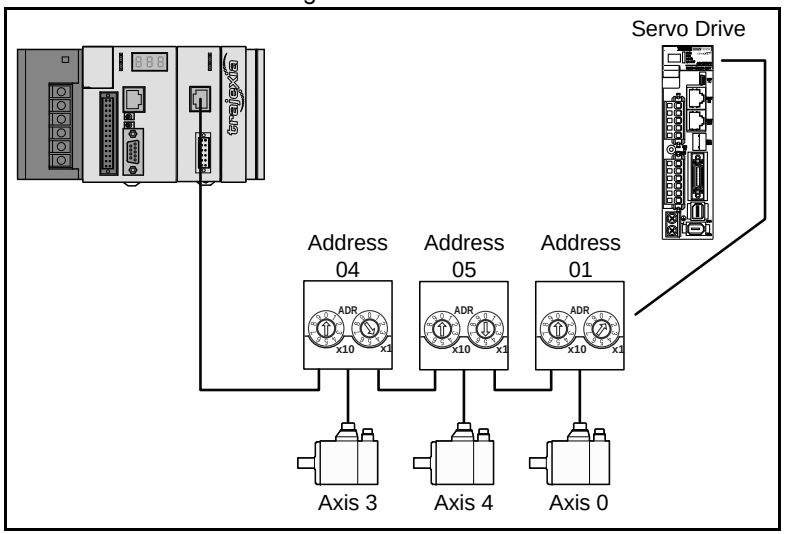

I/O slaves

The node address of I/O slaves is assigned as follows:

- Address switches set from 01 to 99
  The address assigned is 1000 plus the switch setting
- Address switches set to 00 (or no address switches available):
  The address assigned is the address of its predecessor incremented by 1, starting from 1000. When the generated address is already assigned, the next one available will be used.

Example 1:

Rotary switches of all IO Devices set to 0.

- First device gets address 1000 (auto)
- Second device gets address 1001 (auto)
- Third device gets address 1002 (auto)

fig. 22

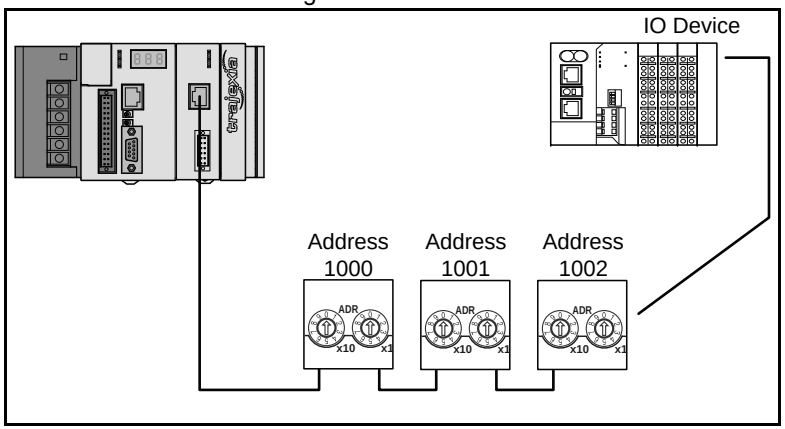

Example 2:

Rotary switches of the first IO Devices is seto to 05, the following devices are set to 00:

- First device gets address 1005 (configured)
- Second device gets address 1006 (auto)
- Third device gets address 1007 (auto)

fig. 23

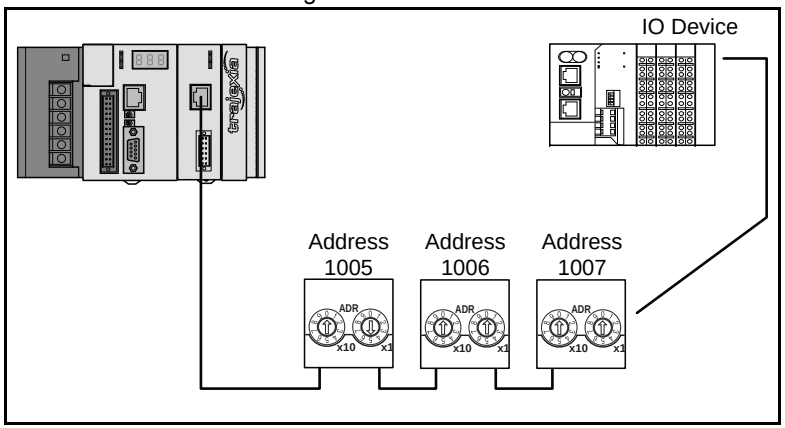

4.10 GRT1-ECT I/O mapping

The GRT1-ECT SmartSlice I/O Unit is an interface for data exchange between a TJ2-ECT__ EtherCAT Master Unit and SmartSlice I/O Units.

4.10.1 SmartSlice I/O mapping

The I/O data of the SmartSlice I/O Units is transferred to the TJ2-MC__ controller. Then the data is automatically mapped in the I/O memory of the TJ2-MC__. The mapping is determined by:

- The type of the SmartSlice I/O Unit
- The order of the SmartSlice I/O Units

The I/O data from GRT1-ECT units is mapped in the TJ2-MC__ in order of the assigned node address. For example, the I/O data of a GRT1-ECT unit with address 1001 is mapped before the I/O data of a GRT1-ECT unit with address 1002. The TJ2-MC__ allocates digital I/O points in a contiguous way, without creating holes in the I/O memory space.

The example shows how digital inputs and outputs are mapped in the **IN** and **OP** memory area of the controller.
Note that the 8 inputs of the TJ2-ECT__ unit are mapped in the IN memory area as input 32 to 39. The number of digital input and output points in the system is reported by the **NIN** and **NOP** parameters respectively.

The input and output data of analog SmartSlice I/O units is mapped in the **AIN** and **AOUT** array of the controller. The number of analog input and output points in the system is reported by the **N_ANA_IN** and **N_ANA_OUT** parameters respectively.

fig. 24

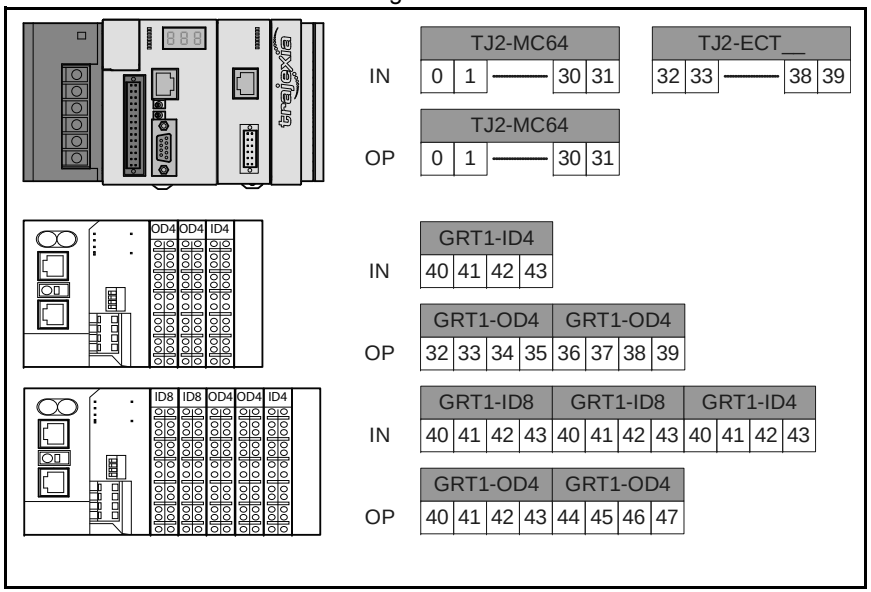

NOTE
The GRT1-ECT does not support the on-line configuration of SmartSlice I/O Units. However, other communications units can change the parameters of a SmartSlice I/O Unit and store this configuration in the SmartSlice I/O Unit.

NOTE
If the GRT1-ECT configuration contains non-supported SmartSlice I/O Units or SmartSlice I/O Units configured to consume a non-default amount of I/O data, the EtherCAT connection to the GRT1-ECT is refused, and it cannot be operated.

NOTE
The automatic I/O mapping of SmartSlice I/O Units in the examples given below assumes that each SmartSlice I/O Unit has the default I/O memory settings.

4.10.2 GRT1-ECT status word

The GRT1-ECT status flags give the status of the connection between the GRT1-ECT and the SmartSlice I/O Units, and the status of the SmartSlice I/O Units. The status flags are 1 word in size. Their information is transferred to the TJ2-MC__ as part of the input data.
The table below gives the meaning of the bits in the status word.

Bit	Flag	Description
0	SmartSlice I/O Bus Communication Error	Monitors the status of SmartSlice I/O communication
1	–	Reserved
2	SmartSlice I/O Unit Warning 0: Normal 1: Error detected	Indicates a minor SmartSlice I/O Unit error. This flag goes ON when there is an error in any one of the connected SmartSlice I/O Units.
3	–	Reserved
4	SmartSlice I/O Unit Alarm 0: Normal 1: Error detected	Indicates a major SmartSlice I/O Unit error. This flag goes ON when there is an error in one of the connected SmartSlice I/O Units.
5–11	–	Reserved
12	Unit Maintenance 0: Normal 1: Error (monitor value reached)	Monitors the operating time threshold that is set with the Unit power ON time monitor function
13	Automatic Restore Monitor 0: Restore successful 1: Restore failed	Indicates whether or not the automatic parameter restore to the SmartSlice I/O Units was completed successfully
14	Communication Unit Error 0: Normal 1: Error occurred	This flag is ON if one of the other flags (bits 0 to 13) is ON
15	I/O Refreshing 0: I/O communication stopped 1: I/O communication normal	Indicates whether I/O data is exchanged normally

To read the status word, use the command

IO_STATUS(unit, address, vr_index)

where:
- **unit** is the number of the EtherCAT Master Unit in the Motion Controller system
- **address** is the (assigned) node address of the GRT1-ECT
- **vr_index** is the VR memory address where the read status word is put. Use -1 to print the status word to the Command Line Terminal interface.

With a status mask system errors triggered by an **IO_STATUS** of a device can be masked out thus preventing a system error. If a bit of an **IO_STATUS** is set and the same bit in the **IO_STATUSMASK** of the same device (and status index if applicable) is set then a system error is triggered. If the same bits in either **IO_STATUS** or **IO_STATUSMASK** (or both) are not set then this will not trigger a system error.

To set the status error mask, use the command

IO_STATUSMASK(unit, address, read_write, vr_index or mask_value)

where:
- **unit** is the number of the EtherCAT Master Unit in the Motion Controller system
- **address** is the (assigned) node address of the GRT1-ECT
- **read_write**
  0: Read status mask
  1: Write status mask
- **vr_index** (if **read_write** is 0)
  Index of the VR entry where the read status mask is copied to
  -1 will print the results to the terminal.
- **mask_value** (if **read_write** is 1)
  value of the status mask to be written

The default value of the status error mask after the controller is turned on or reset is 4000 hex. This disables the WDOG when an error occurs in the GRT1-ECT. 4000 hex equals 0100 0000 0000 0000 binary. Bit 14 is the overall error bit, which is set to 1 when an error occurs.

4.10.3 Table registration

The table registration function registers the configuration of the SmartSlice I/O Units that are connected to the GRT1-ECT in a table in the GRT1-ECT. This allows for a comparison of the actual configuration when the power is turned on with the registered configuration.
- To enable the registered table, make sure that unit dipswitch 1 (REGS) is set to ON before the power is turned on.
- To disable the registered table, make sure that unit dipswitch 1 (REGS) is set to OFF before the power is turned on. In this case, the GRT1-ECT automatically detects the actual I/O configuration and starts the communication.

Create a new registration table

To register the table, make sure the power of the GRT1-ECT and the SmartSlice I/O Units is on, and set unit dipswitch 1 (REGS) on the GRT1-ECT from OFF to ON. If the registration table is refreshed, the old registration table is erased.

NOTE
It is recommended to register the I/O configuration table when all SmartSlice I/O Units are communicating, that is, when the TS LED is lit green.

The configuration information that is registered contains these items:
- The order of the SmartSlice I/O Units connected to the GRT1-ECT.
- The I/O size (input or output, number of bits) of each SmartSlice I/O Unit.

The configuration information does not contain the model numbers of the SmartSlice I/O Units.

Comparison of the actual configuration and the registered table

When unit dipswitch 1 is set to ON, an I/O configuration table is registered in the GRT1-ECT, and the GRT1-ECT is turned on, the GRT1-ECT automatically compares the actual I/O configuration and the registered table. If a registered SmartSlice I/O Unit cannot participate in he I/O communication, or if the GRT1-ECT detects an unregistered SmartSlice I/O Unit, a verification error occurs. In this case, the concerned SmartSlice I/O Units do not participate in the I/O communication. The I/O communication starts with the other SmartSlice I/O Units.
The tables above give an example of a mismatch between the registered table and the actual configuration. The I/O data sizes of the third unit do not match. Therefore, a verification error occurs and the third unit does not participate in the communication.
The TS LED flashes red when a verification error occurs.

fig. 25

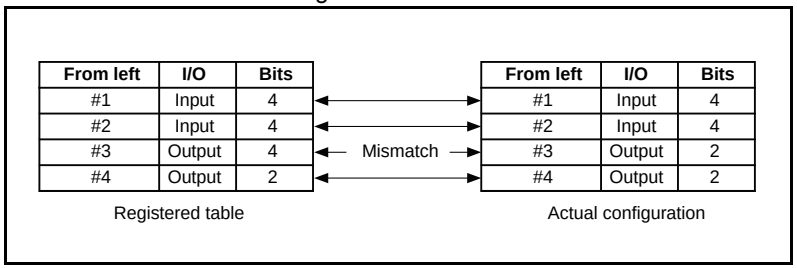

5 Examples and tips

This chapter gives 2 categories of examples and tips:
- How-to's.
- Practical examples.

5.1 How-to's

5.1.1 Startup program

The purpose of this program is to compare the detected MECHATROLINK-II or EtherCAT configuration with the expected one (the expected configuration is the configuration existing in the moment you create the program).
The SHELL program does these actions:
- Checks the number of nodes in the system.
- Checks that the node numbers agrees.
- Checks if all devices are connected and have power.
- Any non agreement, the program stops.
- Sets the correct **ATYPE** as selected in the intelligent axis window.
- Sets the mode, **Run** or **Commisioning**.

How to set a startup program
When you add a new TJ2-MC__ to the solution in Trajexia Studio, 2 programs are created by default: the SHELL program, and an application program called APPLICATION.
A TJ2-MC__ can execute a program at startup: when the device is switched on, it executes the program.
You can set the startup priority for a program in Trajexia Studio with the Priority property in the Properties window. If you click the ellipsis button in the edit field of this property, the StartUp Priority window shows.
To set the program to run at power up, select the Run at Power Up check box and select a priority in the list. Possible priority values are Default, 0 to 19 (low priority) or 20 and 21 (high priority).
To set the program not to run at startup, clear the Run at Power Up check box.

fig. 1

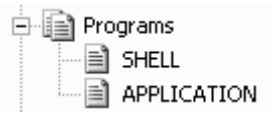

fig. 2

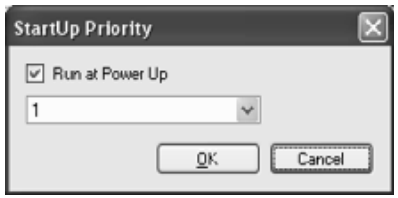

NOTE
The SHELL program by default runs at startup at priority 0.

NOTE
OMRON recommends that the statement **RUN “APPLICATION”** is used in the Startup program to start your application program. The application program starts when the startup program is executed successfully and without errors.
If you set an application program to “Run at startup” there is a risk that the machine starts if there is an error on the MECHATROLINK-II bus.

Example

```
'==============================================
'THE FIRST PART OF THE PROGRAM
'CONSISTS OF A CHECK SEQUENCE TO
'VERIFY THAT THE DETECTED AXIS CONFIGURATION IS THE
'EXPECTED ONE.
'IF YES, THE PROGRAM FINISHES AND STARTS "APPLICATION".
'IF NOT, THE PROGRAM STOPS AND NO OTHER PROGRAM STARTS.
'THIS PROGRAM MUST BE SET TO RUN AT POWER UP IN 'A LOW
'PRIORITY TASK (1 IN THIS EXAMPLE)
'==============================================
'Start MECHATROLINK Section
' Check detected slaves
' Unit 0
IF NOT MECHATROLINK(0,3,0) THEN
   PRINT "Error getting slave count for unit 0"
   STOP
ELSE
   IF VR(0) <> 3 THEN
      PRINT "Incorrect slave count for unit 0"
      STOP
   ENDIF
ENDIF
IF NOT MECHATROLINK(0,4,0,0) THEN
   PRINT "Error getting address for unit 0, station 0"
   STOP
ELSE
   IF VR(0) <> 65 THEN
      PRINT "Incorrect address for unit 0, station 0"
      STOP
   ENDIF
ENDIF
IF NOT MECHATROLINK(0,4,1,0) THEN
   PRINT "Error getting address for unit 0, station 1"
   STOP
ELSE
   IF VR(0) <> 66 THEN
      PRINT "Incorrect address for unit 0, station 1"
      STOP
   ENDIF
ENDIF
IF NOT MECHATROLINK(0,4,2,0) THEN
   PRINT "Error getting address for unit 0, station 2"
   STOP
ELSE
   IF VR(0) <> 67 THEN
      PRINT "Incorrect address for unit 0, station 2"
      STOP
   ENDIF
ENDIF
' Set axis types
' Unit 0
ATYPE AXIS(0)=40
ATYPE AXIS(1)=40
ATYPE AXIS(2)=40
' Set drives into run mode
' Unit 0
MECHATROLINK(0,20,65)
MECHATROLINK(0,20,66)
MECHATROLINK(0,20,67)
```

```
'Stop MECHATROLINK Section
'==================================================
'THIS SECTION MUST BE MANUALLY SET BY THE USER
'ACCORDING TO THE APPLICATION. TYPICAL ACTIONS ARE
'VARIABLE INITIALIZATION, SERVO/AXIS SETTING, NAMING
'GLOBAL VARIABLES AND START THE "APPLICATION" PROGRAM.
'==================================================
'Define Names for global variables
GLOBAL "project_status",100
GLOBAL "alarm_status",101
GLOBAL "action",102
'Initialize variables
VR(0)=0
project_status=0
alarm_status=0
action=0
'Start APPLICATION program
RUN "APPLICATION",2
STOP
```

5.1.2 Gain settings

The gain setting is related to the mechanical system to which the motor is attached. There are three main concepts:

- Inertia ratio
- Rigidity
- Resonant frequency.

These concepts are described in the Hardware Reference Manual in the chapter System Philosophy.

This section shows example parameter values for:

- Speed Loop Gain
- Proportional position gain
- Velocity Feed Forward gain.

The example values for the program and motion parameters in the Trajexia system are given below. Note that they are appropriate for 13-bit encoders.

Drive Parameter value	Description
Pn103 = 716	Inertia ratio
Pn110 = 0012	No autotuning
Pn202=1	Gear ratio numerator
Pn203=1	Gear ratio denominator

Motion Parameter values	Description
UNITS =1	Working in encoder counts
SPEED=200000	Speed setting
ACCEL=1000000	Acceleration setting
DECEL=1000000	Deceleration setting
MOVEMENT=81920	10 Turns

Speed mode examples

In this mode the position loop is closed in Trajexia and the Speed loop is closed in the Servo Drive. The **Speed** axis parameter is sent to the Servo Drive, and reads the position feedback.

```
BASE(0)
ATYPE=44 'Servo axis encoder mode
SERVO=1
WDOG=1
DEFPOS(0)
loop:
    MOVE(81920)
    WAIT IDLE
    WA(100)
    DEFPOS(0)
GOTO loop
```

fig. 3

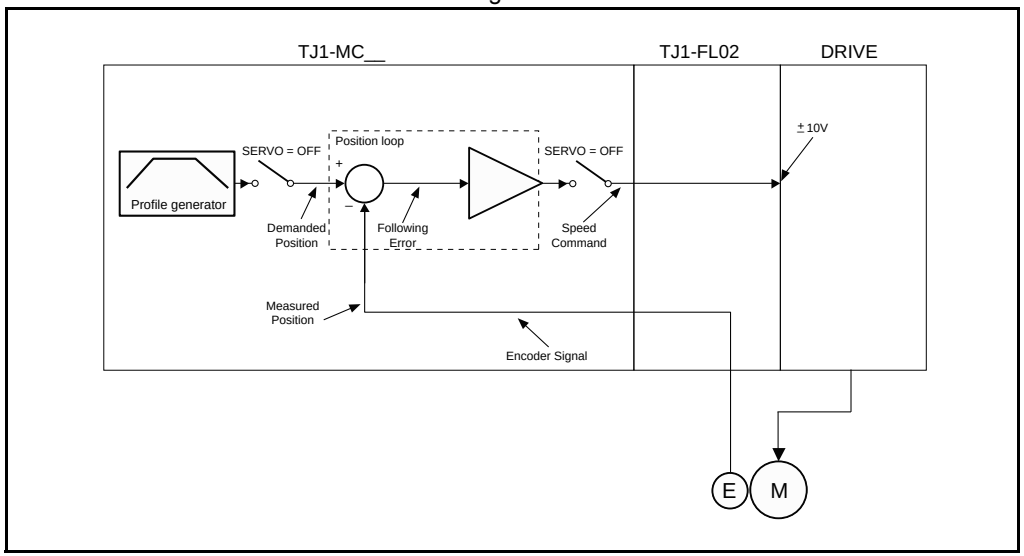

Example 1

Only proportional gain has a set value, the Following Error is proportional to the speed.
The parameter values for the example are:

Motion Parameter values
P_Gain=131072
VFF_GAIN=0
Fn001=4

NOTE
The colours and scale of the oscilloscope for speed mode are as follows:
Red: MSPEED (Measured Axis speed). Units is 50 units/ms/division
Blue: FE (Following Error). Units is depending on the graph
Green: MPOS (Measured Axis position). 50000 units/division

fig. 4

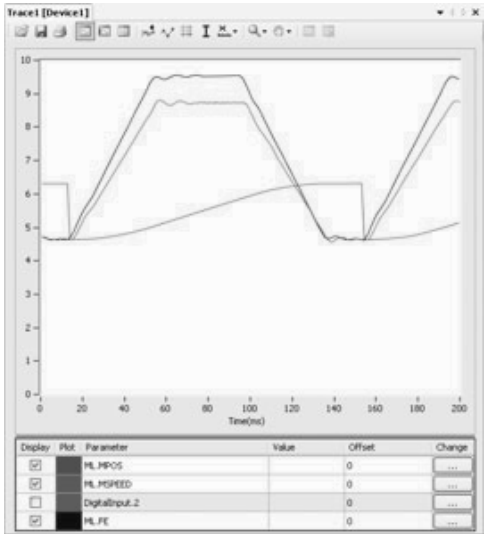

Example 2

The value for rigidity is increased. The error magnitude remains the same but the ripple, the speed stability and overshoot are better.
The parameter values for the example are:

Motion Parameter values
P_Gain=131072
VFF_GAIN=0
Fn001=6

fig. 5

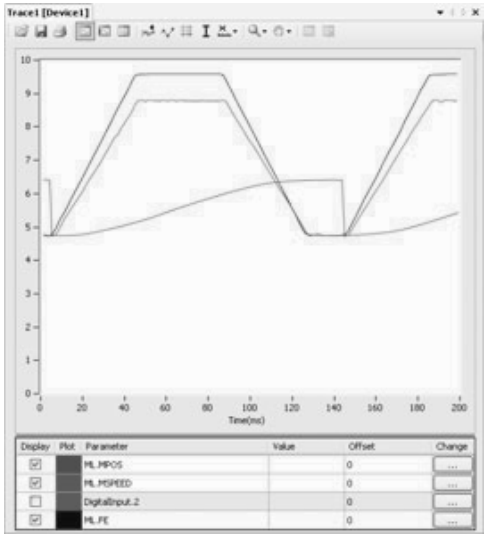

Example 3

The parameter **P_GAIN** is increased further. The Following Error decreases proportionally.
The parameter values for the example are:

Motion Parameter values
P_Gain=200000
VFF_GAIN=0
Fn001=6

fig. 6

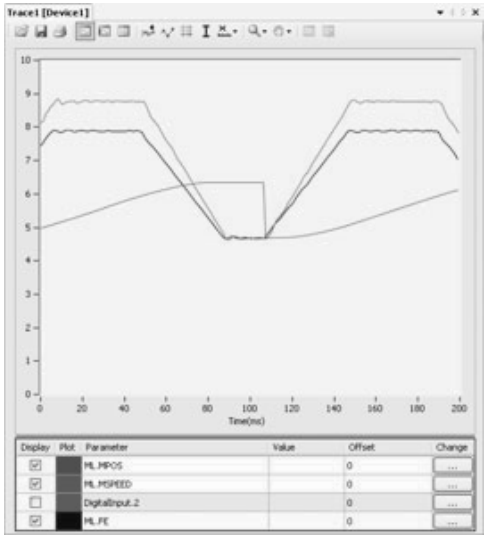

Example 4

The value of the parameter **P_GAIN** two times the value in example 1. The Following Error is half, but there is vibration due to the excessive gains.
The parameter values for the example are:

Motion Parameter values
P_Gain=262144
VFF_GAIN=0
Fn001=6

fig. 7

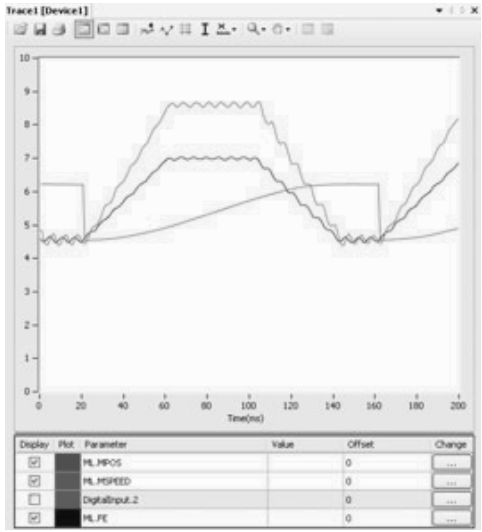

Example 5

The value of the parameter **P_GAIN** is set to the value in example 1. The value of **VFF_GAIN** is increased. The Following Error is reduced without a reduction to the stability. The Following Error is not proportional to the speed.
The parameter values for the example are:

Motion Parameter values
P_Gain=131072
VFF_GAIN=1400000
Fn001=6

fig. 8

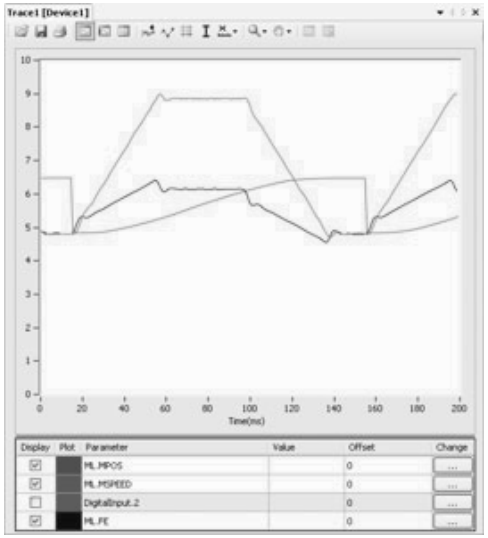

Example 6

With this value of VFF_GAIN the Following Error is proportional to the acceleration, and smaller than with just proportional gain (the scaling is 20 units/division). The Following Error approaches zero during constant speed. The negative effect of this set of values is the overshoot and undershoot when the acceleration changes; this can be reduced but not eliminated by increasing the speed loop gain, if the mechanical system can cope with a high gain.
The parameter values for the example are:

Motion Parameter values
P_Gain=131072
VFF_GAIN=1573500
Fn001=6

fig. 9

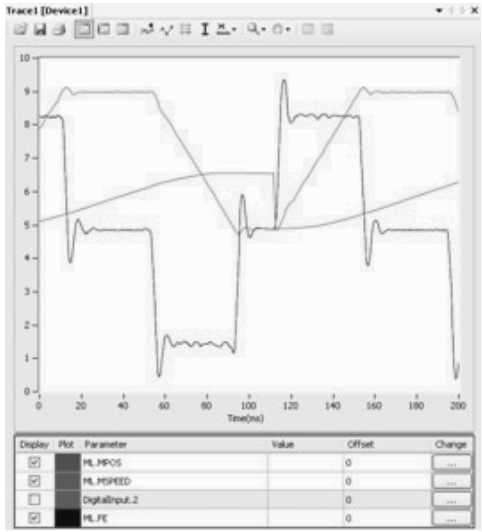

Example 7

The value of the rigidity is increased from 6 to 8. The overshoot/undershoot is smaller but the motor has more vibration.
The parameter values for the example are:

Motion Parameter values
P_Gain=131072
VFF_GAIN=1573500
Fn001=8

fig. 10

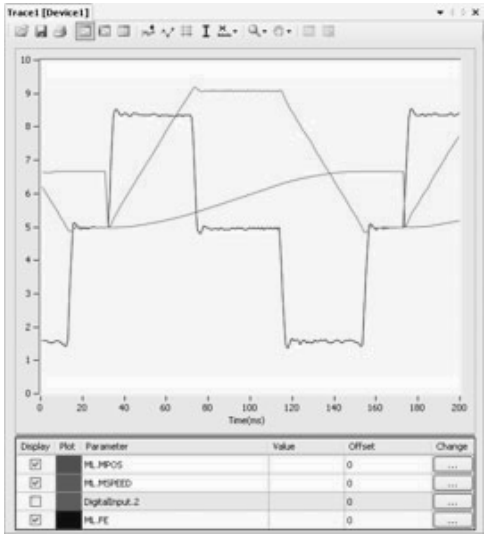

Example 8

Opposite to the P_GAIN, where the higher, the better (the limit is when the mechanical system starts vibrating), for the VFF_GAIN there is an optimum value (the one in test 6), values higher than this value has an error proportional to the speed/acceleration but with different sign. The required correction is too large.
The parameter values for the example are:

Motion Parameter values
P_Gain=131072
VFF_GAIN=1650000
Fn001=6

fig. 11

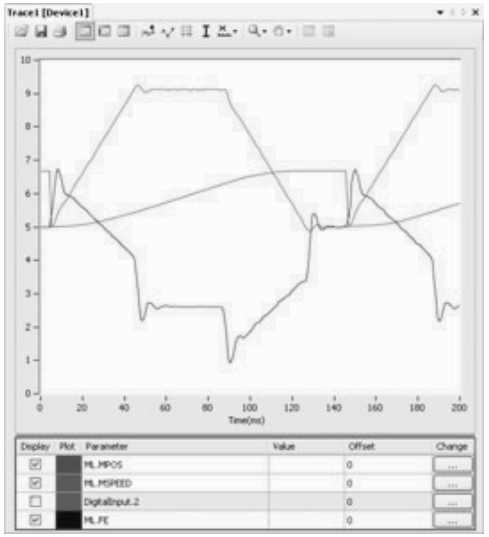

Position mode examples

In this mode the position and speed loop are closed in the Servo Drive. The TJ1-ML__ sends the position command through the MECHATROLINK-II network to the Servo Drive, and reads the position feedback.
Note that this system has no sample delay as compared to the position loop in the Servo Drive, the Demand_Position in cycle "n" with the Measured_Position in cycle "n".
The Trajexia, for the internal handling, continues to use its own position loop, so the Following Error that read in the Axis parameter in Trajexia is not the real one in the Servo-drive. To read the correct Following Error use DRIVE_MONITOR.
Adjust the rigidity of the servo, the speed loop gain and the position loop gain at the same time using just proportional position gain. The results are similar to the MECHATROLINK-II Speed mode with the advantages:

- The tuning is more simple, only the rigidity (Fn001) and, if necessary, the feedforward gain (Pn109) needs to be set.
- The position loop in the servo is faster (250µs) than in Trajexia and it is turned together with the speed loop.
- There is no sample time delay between "Target position" and "Measured position”.

fig. 12

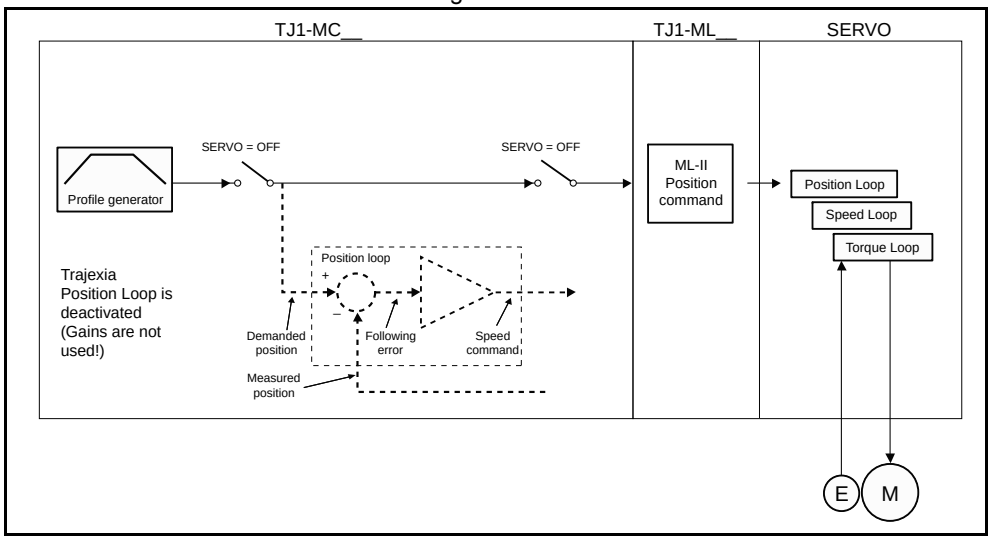

To do a finetune the different gain parameters can be changed individually.

```
BASE(0)
ATYPE=41 'MECHATROLINK Position mode
SERVO=1
DRIVE_CONTROL=2 'To monitor the Following Error in
                'DRIVE_MONITOR
WDOG=1
DEFPOS(0)
loop:
    MOVE(81920)
    WAIT IDLE
    WA(100)
    DEFPOS(0)
GOTO loop
```

Example 1

The Following Error is proportional to the speed. There is a "soft profile" due to the low rigidity setting (low gain).

NOTE
The colours and scale of the oscilloscope for position mode are as follows:
Red: MSPEED (Measured Axis speed). Units is 50 units/ms/division
Blue: DRIVE_MONITOR (set as Following Error in the Servo Drive). Units is depending on the graph
Green: MPOS (Measured Axis position). 50000 units/division

The parameter values for the example are:

Motion Parameter values
Fn001=4
Pn109=0

fig. 13

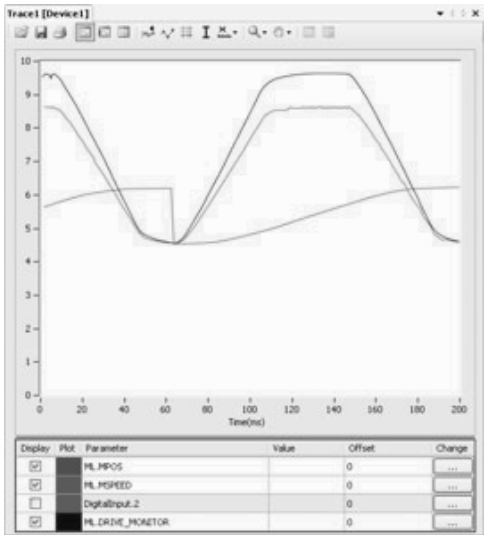

Example 2

The Following Error reduces as the rigidity increases.
The parameter values for the example are:

Motion Parameter values
Fn001=6
Pn109=0

fig. 14

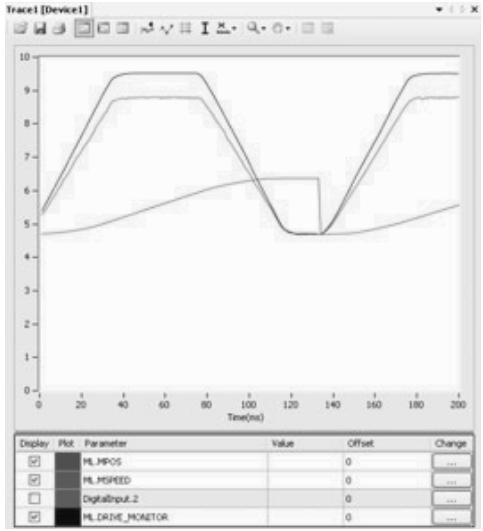

Example 3

With high gain the motor starts to vibrate but the profile is more stable that in MECHATROLINK-II Speed mode.
The parameter values for the example are:

Motion Parameter values
Fn001=8
Pn109=0

fig. 15

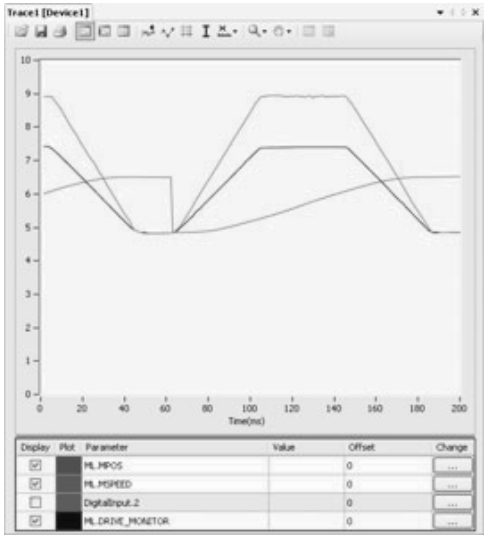

Example 4

The effect of the Feedforward gain is that the Following Error is reduced and the effect is proportional to the acceleration.
The parameter values for the example are:

Motion Parameter values
Fn001=6
Pn109=95

fig. 16

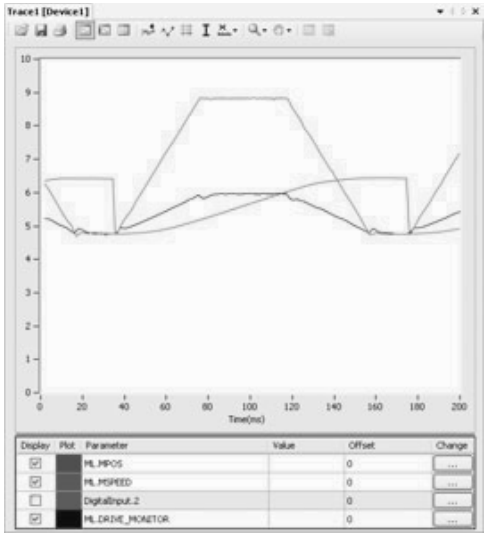

Example 5
With the feedforward set to 100%, the Following Error is very small and proportional to the acceleration. The optimum value of 100% correction is the maximum value that can be set. The parameter value of Pn109 is easier to set than the parameter value of VFF_GAIN.
The parameter values for the example are:

Motion Parameter values
Fn001=6
Pn109=100

fig. 17

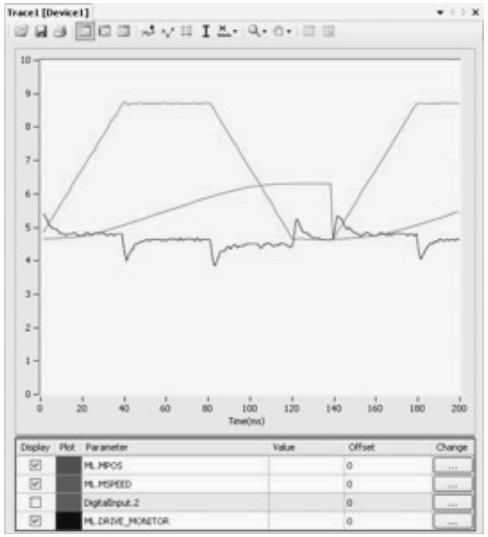

5.1.3 Setting the UNITS axis parameter and gear ratio

In controlling the mechanical axis with the Trajexia TJ2-MC__, a Servo Drive and a servo motor, the only measurement units that the hardware understands are encoder counts. All commands to the drive to move an axis are expressed in encoder counts. All feedback information about axis positions is also expressed in encoder counts. When writing programs in BASIC to achieve movements or a sequence of movements, a user can prefer to work with user defined units, such as millimeter, centimeter, meter, degree of angle, "product", "rotation", "stations". The **UNITS** axis parameter contains the conversion factor between encoder counts and user defined units. All axis parameters related to motion and arguments of axis commands that determine the amount of motion are expressed in these user units. This parameter enables the user to define the most convenient units to work with. For example, for a moving part that makes a linear motion, you can prefer mm, or fraction of mm. For a moving part that makes a rotation motion, you can prefer a degree of angle or its fraction. For more information on the **UNITS** axis parameter, see section 3.2.330.

However, the user must be aware that not only the **UNITS** axis parameter matters in the conversion between encoder counts and user defined units. Certain Servo Drive parameters and some characteristics of the mechanical system are also important. The following sections describe which Servo Drive parameters are important for this conversion. We also give examples of how to set those parameters and the **UNITS** axis parameter, taking the characteristics of the mechanical system into account.

Conversion between encoder counts and user defined units

Two very important parameters of the Servo Drives for conversion of encoder counts into user units are the electronic gear ratio numerator and the electronic gear ratio denominator. The table below gives these parameters for the Servo Drives.

Servo Drive	Numerator	Denominator
Sigma-II	Pn202	Pn203
Sigma-V	Pn20E	Pn210
Junma	Pn20E	Pn210
G-Series	Pn205	Pn206
Accurax G5	Pn009	Pn010
Accurax G5-A/P	Not available when controlled by TJ2-KS02	

NOTE
The remainder of this section uses the parameters of the Sigma-II Servo Drive, that is, Pn202 and Pn203. If you use a different Servo Drive, you must use the corresponding parameters.

If a servo motor with an absolute encoder is used, setting parameter Pn205 (Multiturn limit for Sigma-II) is also necessary.

Parameter Pn202 is the electronic gear ratio denominator (G1). Parameter Pn203 is the electronic gear ratio numerator (G2). The servo motor rotates using the value of the position command signal sent by the TJ2-MC__, multiplied by the electronic gear (Pn202, Pn203). On the output (servo motor) side, the signal is expressed in number of encoder pulses. For more information on Servo Drive parameters Pn202 and Pn203, see the Sigma-II Servo Drive manual.
The UNITS axis parameter effectively expresses the ratio between user units that the user wants to use in the program and the position sent to the Servo Drive via the MECHATROLINK-II bus. Taking the electronic gear setting into account, the equation expressing the relation between user units, the **UNITS** parameter, parameters Pn202 and Pn203, encoder pulses and mechanical measurement units is:

$$\frac{Pn202}{Pn203} \cdot UNITS = \frac{y \cdot encoder_counts}{x \cdot user_units}$$

where *y* is the number of encoder counts and *x* is the amount in user units.

fig. 18

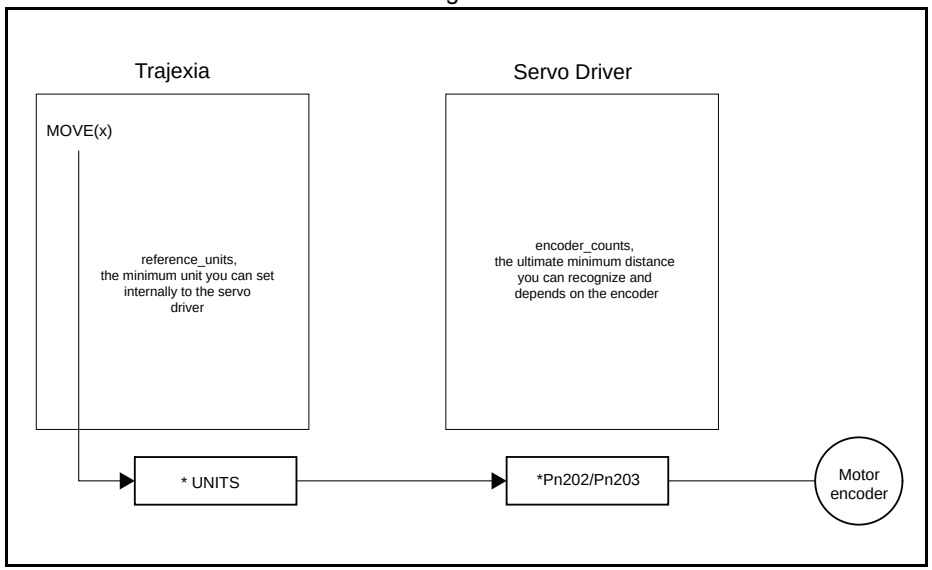

Example 1

The mechanical system consists of a simple rotary table. A servo motor with 13-bit incremental encoder is used. The gear ratio of the gearbox is 1:10. The desired user units are degree of angle. This system can be described with the following equations:

$$1 \cdot motor_revolution = 2^{13} \cdot encoder_counts$$

$$10 \cdot motor_revolution = 1 \cdot machine_cycle$$

$$1 \cdot machine_cycle = 360^{o}$$

The combination of these equations results in:

$$\frac{Pn202}{Pn203} \cdot UNITS = \frac{2^{13} \cdot encoder_counts}{1 \cdot motor_revolution} \frac{10 \cdot motor_revolution}{1 \cdot machine_revolution} \frac{1 \cdot machine_revolution}{360^{o}} =$$

$$\frac{2^{13} \cdot 10}{360} \frac{encoder_counts}{degree}$$

fig. 19

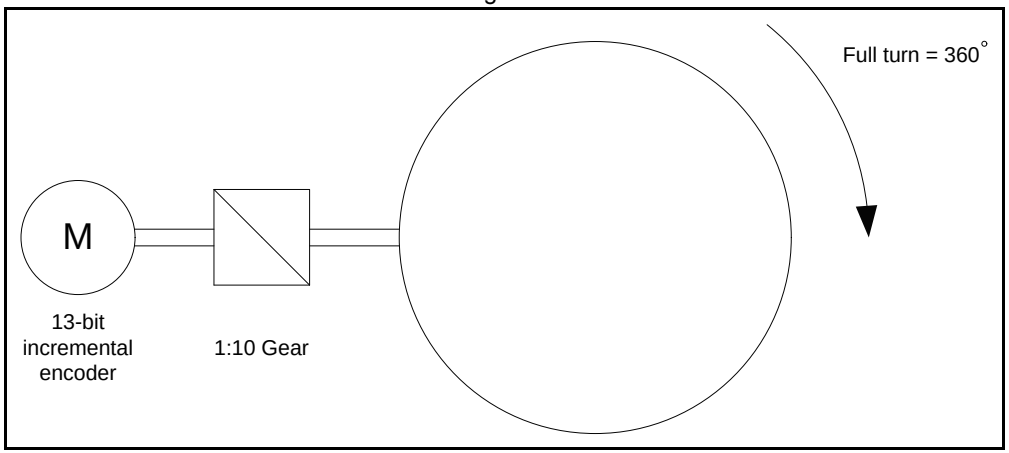

And therefore:

$$\frac{Pn202}{Pn203} \cdot UNITS = \frac{2^{13} \cdot 10}{360}$$

From this equation, we can derive the values for Pn202, Pn203 and **UNITS**, given the following restrictions and recommendations:

1. Pn202 and Pn203 are integers.
2. UNITS must not have an infinite number of decimal digits. This can create rounding errors that result in small position errors that add up to large accumulative position errors.
3. For reasons of stability, it is necessary to avoid situations where Pn202/Pn203 is less than 0.01 or greater than 100. It is recommended that Pn202/Pn203 is approximately 1.

We can now rewrite the last equation to:

$$UNITS \cdot \frac{Pn202}{Pn203} = 2^{13} \frac{10}{360}$$

One solution to this equation is:

$$UNITS = 2^{13} = 8192$$
$$Pn202 = 10$$
$$Pn203 = 360$$

When we consider the third recommendation from the above list (avoid situations where Pn202/Pn203 is less than 0.01 or greater than 100), we can rewrite the last equation to:

$$UNITS \cdot \frac{Pn202}{Pn203} = 2^{13} \frac{10}{360} = 2^{8} \frac{2^{5}}{36} = 2^{8} \frac{32}{36}$$

This gives us the solution:

$$UNITS = 2^{8} = 256$$
$$Pn202 = 32$$
$$Pn203 = 36$$

With these values, the command **MOVE(28)** rotates the table 28 degrees in positive direction.

Absolute encoder setting

The absolute encoder keeps the current motor position, even if there is no power supplied. The absolute encoder gives the position within one turn (that is, a fraction from 0 to and excluding 1), and it has a multiturn counter. You can set the multiturn behaviour of the absolute encoder with the parameter Pn205 of the Sigma-II Servo Drive. This parameter adjusts the maximum number of turns that the counter counts before it has an overflow. For more information on Servo Drive parameter Pn205, see the Sigma-II Servo Drive manual. Taking this parameter value into account, the maximum position value the encoder can signal is:

$$max_encoder_count_value = (Pn205 + 1) \cdot encoder_counts - 1$$

which makes it Pn205 complete turns, plus the position within one turn (the fraction from 0 to and excluding 1). When the MECHATROLINK-II connection is established with the drive, the absolute encoder position is read from the drive and the value is written in **MPOS** (after the conversion: **UNITS** × Pn202/Pn203). When the mechanical system has a limited travel distance to move, like in a ball screw, the value of the parameter Pn205 should be set large enough to have an overflow of the counter out of the effective position. This is called limited axis or finite axis. A typical example of a limited axis is a ball screw, as shown in fig. 24. When the mechanical system always moves in the same direction, it reaches the overflow of the multiturn counter. In this case, the value of Pn205 must guarantee that the overflow always occurs in the same position with respect to the machine.

This is called unlimited axis and a typical example of it is a turntable shown in fig. 20. It can be achieved with the following equation: the smallest value of *m* such that:

$$n \cdot \text{machine_cycles} = m \cdot \text{motor_revolution}$$

Because *n* and *m* are integers: Pn205 = *m* – 1. This setting is explained in the following example.

Example 2

The mechanical system consists of simple rotary table shown in the figure. A servo motor with 16-bit absolute encoder is used. The gear ratio of the gearbox is 1:10. The desired user units are degree of angle. The rotary table is divided in six sections of 60 degrees each. Therefore the machine_cycle is 60 degrees.
When we apply the last equation to the above, we get:

$$10 \cdot \text{motor_revolution} = 1 \cdot \text{machine_revolution} = 6 \cdot \text{machine_cycle}$$

Simplification of this equation gives:

$$5 \cdot \text{motor_revolution} = 3 \cdot \text{machine_cycle}$$

This results in:

$$Pn205 = 5-1 = 4$$

We calculate the parameters as we did in example 1. This gives:

$$UNITS = 2^{11} = 2048$$
$$Pn202 = 32$$
$$Pn203 = 36$$

fig. 20

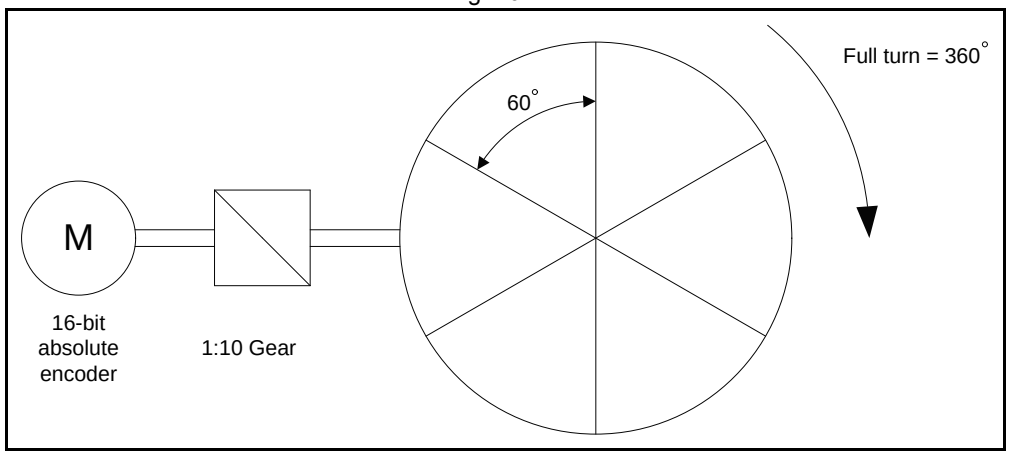

To guarantee the correct overflow both in Trajexia and in the Servo Drive, we must set two additional axis parameters: **REP_DIST** = 60, and **REP_OPTION** = 1. With these settings, the command **MOVE(35)** rotates the table 35 degrees in positive direction. The range of possible **MPOS** and **DPOS** values is from 0 degrees to 60 degrees.

CAUTION
You must initialize the absolute encoder before you use it for the first time, when the battery is lost during power off and when the multiturn limit setting in the parameter Pn205 is changed. The initialization can be done on the display of the Servo Drive or with the software tool. For more detail on initialising absolute encoder, please see the Sigma-II Servo Drive manual.

CAUTION
It is possible to reset the multiturn counter, but it is not possible to reset the position within one turn (the fraction from 0 to and excluding 1). To adjust zero offset, use the parameter Pn808. For more details see the NS115 MECHATROLINK-II Interface Unit manual.

CAUTION
At power up, the absolute encoder position is read from the motor and written to **MPOS** using the following conversion:

- For **MPOS**:

$$\text{Absolute_MPOS} = \text{abs_position_encoder} \cdot \frac{1}{\text{UNITS}} \cdot \frac{\text{Pn203}}{\text{Pn202}}$$

- This is correct if

$$(\text{Pn205} + 1) \cdot \frac{\text{Pn203}}{\text{Pn202}} \cdot \text{encoder_counts} < 2^{24}$$

- If this value is greater than 2^{24}, **MPOS** can have incorrect values at start-up. To avoid this problem, add the program code **DEFPOS = ENCODER/UNITS** after all **UNITS** initializations.

CAUTION
To make sure that the absolute position is always correct, you must make sure that

$$(\text{Pn205} + 1) \cdot \text{encoder_resolution} < 2^{32}$$

and that

$$(\text{Pn205} + 1) \cdot \text{encoder_resolution} \cdot \frac{\text{Pn203}}{\text{Pn202}} < 2^{32}$$

Note that this is not obvious for the high-resolution encoders of the Sigma-V motors.

Example 3

The mechanical system uses a servo motor with an 17-bit absolute encoder. The mechanical gear ratio of the gearbox is 1:6.31. One rotation of the pulley moves the moving part on the belt 320 mm. The total length of the belt, and therefore the total moving range of the motion part, is 4160 mm. The mechanical measurement units must be mm. This means that all axis parameters and commands given to Trajexia are expressed in mm. Using the same procedure as in example 1, the equation expressing the relationship between user units and encoder counts is:

fig. 21

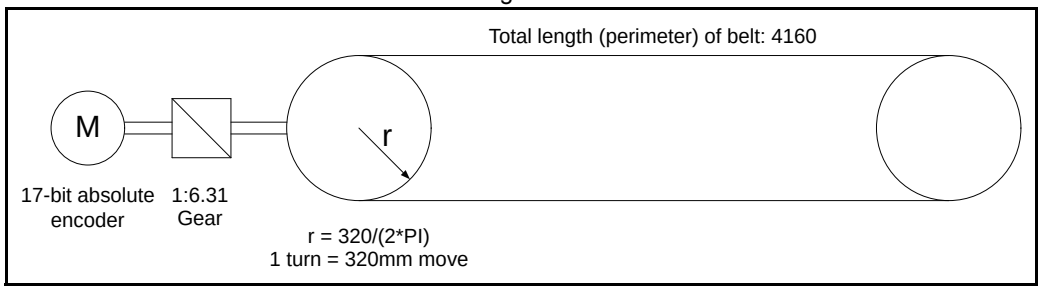

$$\frac{Pn202}{Pn203}\ \text{UNITS} = \frac{2^{17}\cdot \text{encoder_counts}}{1\cdot \text{motor_revolution}}\ \frac{6.31\cdot \text{motor_revolution}}{1\cdot \text{pulley_revolution}}\ \frac{1\cdot \text{pulley_revolution}}{320\text{mm}} =$$

$$\frac{2^{17}\cdot 6.31}{320}\ \frac{\text{encoder_counts}}{\text{mm}}$$

Therefore:

$$\frac{Pn202}{Pn203}\ \text{UNITS} = \frac{2^{17}\cdot 6.31}{320} = \frac{2^{17}}{2^{5}}\frac{631}{1000} = 2^{12}\ \frac{631}{8.125} = 2^{12}\ \frac{631}{2^{3}\cdot 125} = 2^{9}\ \frac{631}{125}$$

One solution is:

UNITS = 2^9 = 512
Pn202 = 631
Pn203 = 125

Note that we have not used the pulley radius in the calculation. This is to avoid the use of π, which cannot be expressed as a fractional number). In toothed pulleys, the number of teeth and mm per tooth is commonly used.

The calculation of the multiturn limit setting is:

$$m \cdot \text{motor_revolution} = n \cdot \text{machine_cycle}$$

$$m \cdot \text{motor_revolution} = n \cdot \text{machine_cycle} \frac{4160 \cdot \text{pulley_revolution}}{320 \cdot \text{machine_cycle}} = n \cdot 13 \cdot \text{pulley_revolution}$$

$$= n \cdot 13 \frac{6 \cdot 31 \text{ motor_revolution}}{1 \text{ pulley_revolution}} = n \cdot 82.03 \cdot \text{pulley_revolution}$$

$$m = n \cdot 82.03$$

The smallest integer *m* for which this equation is valid is 8203. This results in Pn205 = 8202.
In addition, to limit the motion units range to the moving range of the motion part, the following axis parameters must be set: **REP_DIST = 4260**, and **REP_OPTION = 1**. With these settings, executing **MOVE(38)** moves the moving part 38 mm in forward direction. The range of possible **MPOS** and **DPOS** values is 0 mm to 4160 mm.

Example 4

The mechanical system uses a servo motor with a 17-bit absolute encoder. The mechanical gear ratio of the gearbox is 1:12.24. The mechanical measurement units must be tenths of an angle degree. Therefore the total repeat distance for the full turn of the moving part is 3600 tenths of an angle degree.
With the same procedure as in example 1, we have:

fig. 22

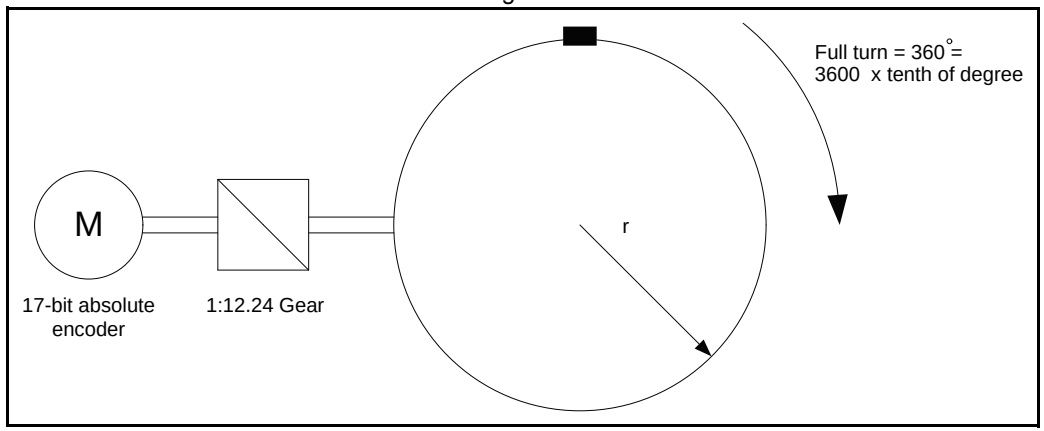

$$\frac{Pn202}{Pn203}\,UNITS = \frac{2^{17}\cdot encoder_counts}{1\cdot motor_revolution}\,\frac{12.24\cdot motor_revolution}{1\cdot machine_revolution}\,\frac{1\cdot pulley_revolution}{3600\ tenth\ of\ degree} =$$

$$= \frac{2^{17}\cdot 12.24}{3600}\,\frac{encoder_counts}{tenth\ of\ degree}$$

Therefore:

$$UNITS = \frac{Pn202}{Pn203} = 2^{17}\,\frac{1224}{360000}$$

One solution is:

$$UNITS = 2^{17} = 131072$$
$$Pn202 = 1224$$
$$Pn203 = 360000$$

Because the greatest common divisor of Pn202 and Pn203 must be 1, we get: Pn202 = 17 and Pn203 = 500. Therefore, the parameters are:

UNITS = 131072
Pn202 = 17
Pn203 = 500
Pn205 = 16
REP_DIST = 3600
REP_OPTION = 1

To calculate the multiturn limit setting Pn205, we have:

$$m\cdot motor_revolution = n\cdot machine_cycle = n\cdot 12.24\cdot motor_revolution$$

The evident solution is: *n* = 100 and *m* = 1224. Or, when we simplify the factors: *n* = 25 and *m* = 306. Therefore: Pn205 = m – 1 = 305. With these settings, executing **MOVE(180)** moves the moving part 180 tenths of an angle degree or 18 angle degrees in forward direction.

Example 5

The mechanical system uses a servo motor with a 17-bit absolute encoder. The mechanical gear ratio of the gearbox is 1:10. The pulley has got 12 teeth, and each two are 50 mm apart. One complete turn of the pulley equals 144 stations on the main wheel. The distance between two stations is 50 mm. The mechanical measurement units must mm. Total repeat distance must be the distance between two stations, 50mm.
With the same procedure as in example 1, we have:

fig. 23

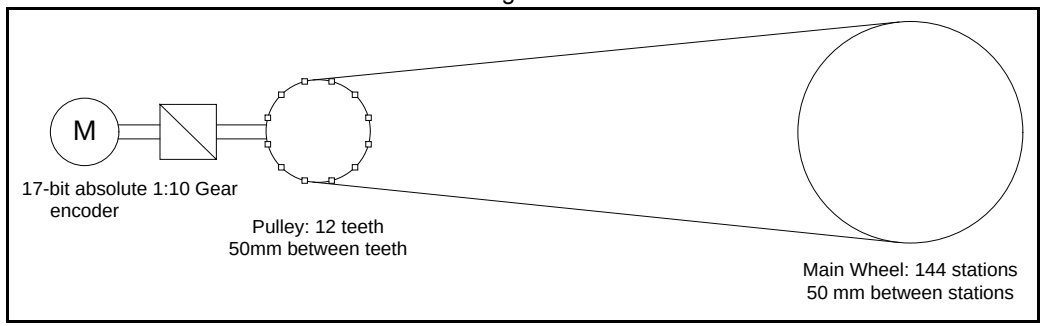

$$\frac{Pn202}{Pn203}\ \text{UNITS} =$$

$$\frac{2^{17}\cdot \text{encoder_counts}}{1\cdot \text{motor_revolution}}\cdot\frac{10\cdot \text{motor_revolution}}{1\cdot \text{pulley_revolution}}\cdot\frac{1\cdot \text{pulley_revolution}}{12\cdot \text{station}}\ \frac{1\cdot \text{station}}{50\text{mm}} =$$

$$= \frac{2^{17}\cdot 10}{12\cdot 50}\ \frac{\text{encoder_counts}}{\text{mm}}$$

Therefore, if we use the mechanical system to set the electronic gear ratio, we have:

$$\text{UNITS}\ \frac{Pn202}{Pn203} = \frac{2^{17}}{50}\ \frac{10}{12}$$

One possible solution is:

$$\text{UNITS} = \frac{2^{17}}{50}$$

Pn202 = 5
Pn203 = 6
Pn205 = 4

Because $2^{17}/50$ is a number with an infinite number of decimal digits, we can choose the following:

$$\text{UNITS}\ \frac{\text{Pn202}}{\text{Pn203}} = 2^{17}\ \frac{10}{50 \cdot 12} = 2^{17}\ \frac{10}{600} = 2^{17}\ \frac{1}{60} = 2^{17}\ \frac{1}{2^{2} \cdot 15} = 2^{15}\ \frac{1}{15}$$

Therefore, the parameters are:

UNITS = 2^{15} = 32768
Pn202 = 1
Pn203 = 15
Pn205 = 4
REP_DIST = 50
REP_OPTION = 1

With these settings, executing **MOVE(50)** moves the moving part 50 mm, or one station.

Example 6

The mechanical system consists of a ball screw. It uses a servo motor with a 17-bit absolute encoder. The mechanical gear ratio of the gearbox is 1:3. The screw pitch of the ball screw is 10mm per revolution. The total travel distance of the ball screw is 540 mm. The mechanical measurement units must be mm.
With the same procedure as in example 1, we have:

fig. 24

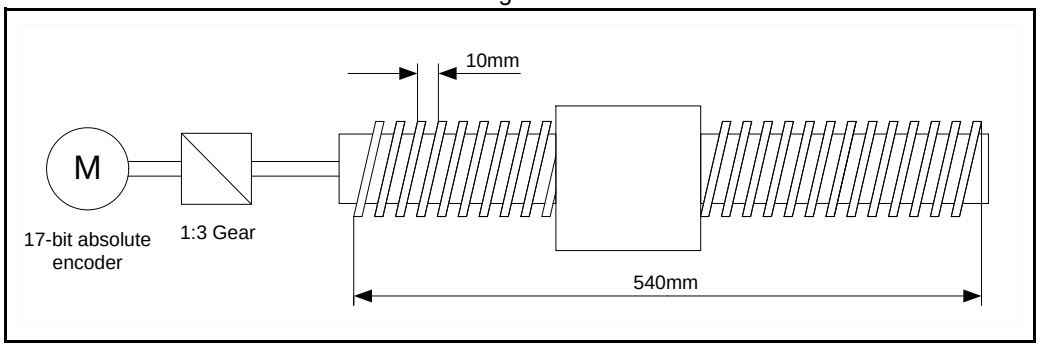

$$\frac{\text{Pn202}}{\text{Pn203}}\ \text{UNITS} = \frac{2^{17} \cdot \text{encoder_counts}}{1 \cdot \text{motor_revolution}}\ \frac{3 \cdot \text{motor_revolution}}{1 \cdot \text{ballscrew_revolution}}\ \frac{1 \cdot \text{ballscrew_revolution}}{10\text{mm}} =$$

$$= \frac{2^{17} \cdot 3}{10}\ \frac{\text{encoder_counts}}{\text{mm}}$$

Therefore:

$$\frac{\text{Pn202}}{\text{Pn203}}\ \text{UNITS} = 2^{17}\ \frac{3}{10} = 2^{17}\ \frac{3}{2 \cdot 5} = 2^{16}\ \frac{3}{5}$$

One solution is:

UNITS = 2^{16} = 65536
Pn202 = 3
Pn203 = 5

The calculation of the multiturn limit setting parameter Pn205 is not needed in this case because the ball screw is a system with a fixed (limited) axis. It is enough to set this value large enough to have the overflow of the counter out of the effective position. Also, because of the axis is finite, it is not important to set the **REP_OPTION** parameter, because **REP_DIST** must be set large enough so it is outside of the maximum effective position (540 mm). One solution is: **REP_DIST** = 1000 and **REP_OPTION** = 0.
With these setting, executing **MOVE(17)** moves the ball screw 17 mm in forward direction.

5.1.4 Mapping Servo Drive inputs and outputs

The Trajexia controller has got a digital I/O space that consists of 1024 digital inputs and 1024 digital outputs.
The digital outputs range has four parts:

- Digital outputs 0 - 7.
  These outputs do not physically exist on the TJ2-MC__. If you write these outputs, nothing happens. If you read these outputs, they return 0.
- Digital outputs 8 - 15.
  These outputs physically exist on the TJ2-MC__. You can physically access them on the 28-pin screwless connector on the front side of the TJ2-MC__ (see the Hardware Reference Manual for details). If you write these outputs, they become active and give a 24 VDC signal. If you read these outputs, they return their current status. Use the command **OP** to write and read these outputs.
- Digital outputs 16 - 31.
  These outputs are software outputs only. They do not physically exist on the TJ2-MC__, but you can write them and read their correct status. You use these outputs mostly in BASIC programs to accomplish some control sequences that require outputs which do not need to be physical. Use the command **OP** to write and read these outputs.
- Digital outputs 32 - 1023.
  These outputs are physically present only if additional digital I/O units are connected to the TJ2-MC__ via MECHATROLINK-II or EtherCAT. Writing and reading them if they do not physically exist (when the I/O units are not connected) has no effect. Use the command **OP** to write and read these outputs.

All outputs are unique to the controller. They are not accessed per axis.

The digital input range has three parts:

- Digital inputs 0 - 15.
  These inputs physically exist on the TJ2-MC__. You can physically access them on the 28-pin screwless connector on the front side of the TJ2-MC__ (see the Hardware Reference Manual for details). These inputs are active (ON) when a 24 VDC signal is applied to them. When you read them, they return their current status. Use the command **IN** to read these inputs.
- Digital inputs 16 - 31.
  These inputs are software inputs only. They do not physically exist on the TJ2-MC__, but you can read them. You use them mostly in BASIC programs to accomplish some control sequences that require inputs which do not need to be physical. Use the command **IN** to read these inputs.
- Digital inputs 32 - 255.
  These inputs are physically present only if additional digital I/O units are connected to the TJ2-MC__ via MECHATROLINK-II or EtherCAT. If you read them if they do not physically exist (the I/O units are not connected), they return 0. Use the command **IN** to read these inputs.

All inputs are unique to the controller. They are not accessed per axis.

Servo Drives inputs in the Trajexia I/O space

With the BASIC command **IN**, you can access the physically present inputs in a BASIC program. These inputs can be built in the controller or connected via MECHATROLINK-II or EtherCAT.
Servo Drives can have additional inputs that are located on their I/O connectors. These inputs can be used as forward and/or reverse limit switches or origin switches. They are mapped into the Trajexia I/O space. Thus, they can be accessed from BASIC programs. Trajexia only supports this for Servo Drives connected to the Trajexia system via MECHATROLINK-II or EtherCAT. It is not supported for Flexible Axis Servo Drives.

Trajexia input	Servo Drive input signal				Description
	Sigma-II	Sigma-V	Junma	G-Series Accurax G5	
16	P_OT	P_OT	P_OT	P_OT	Forward limit switch
17	N_OT	N_OT	N_OT	N_OT	Reverse limit switch
18	DEC	DEC	/DEC	DEC	Zero point return decelera-tion
19	PA	PA	Not used	Not used	Encoder A phase signal
20	PB	PB	Not used	Not used	Encoder B phase signal
21	PC	PC	Not used	PC	Encoder C phase signal
22	EXT1	EXT1	/EXT1	EXT1	First external latch signal
23	EXT2	EXT2	Not used	EXT2	Second external latch signal
24	EXT3	EXT3	Not used	EXT3	Third external latch signal
25	BRK	BRK	/BRK	BRK	Brake output
26	Reserved	HBB	E-STP	E-STP	Emergency stop switch
27	Reserved	Reserved	Not used	SI2	General input 2
28	IO12	IO12	Not used	PCL	General input 12 (Sigma-II and Sigma-V), Torque limit input in positive direction (G-Series and Accurax G5)
29	IO13	IO13	Not used	NCL	General input 13 (Sigma-II and Sigma-V), Torque limit input in negative direction (G-Series and Accurax G5)
30	IO14	IO14	Not used	SI0	General input 14 (Sigma-II and Sigma-V), General input 0 (G-Series and Accurax G5)
31	IO15	IO15	Not used	SI1	General input 15 (Sigma-II and Sigma-V), General input 1 (G-Series and Accurax G5)

The inputs in the table above are located on the CN1 I/O connector of the respective Servo Drive. The pin arrangement of this connector is different for the respective Servo Drives. For the Sigma-II and Sigma-V Servo Drives, the input signals P_OT, N_OT, DEC, EXT1, EXT2, EXT3, BRK, IO12, IO13, IO14 and IO15 can be mapped to pins of the CN1 I/O connector. To do this, you must set the appropriate parameter of the Servo Drive. The table below shows the possible settings and parameter values.

Input signal - Parameter name	Parameter setting	CN1 pin number	
		Sigma-II	Sigma-V
P_OT (active high) - Pn50A.3 N_OT (active high) - Pn50B.0 DEC (active high) - Pn511.0	0	40 (SI0)	13 (SI0)
	1	41 (SI1)	7 (SI1)
	2	42 (SI2)	8 (SI2)
	3	43 (SI3)	9 (SI3)
	4	44 (SI4)	10 (SI4)
	5	45 (SI5)	11 (SI5)
	6	46 (SI6)	12 (SI6)
	7	Always ON	
	8	Always OFF	
/P_OT (active low) - Pn50A.3 /N_OT (active low) - Pn50B.0 /DEC (active low) - Pn511.0	9	40 (SI0)	13 (SI0)
	A	41 (SI1)	7 (SI1)
	B	42 (SI2)	8 (SI2)
	C	43 (SI3)	9 (SI3)
	D	44 (SI4)	10 (SI4)
	E	45 (SI5)	11 (SI5)
	F	46 (SI6)	12 (SI6)
/EXT1 (active low) - Pn511.1 /EXT2 (active low) - Pn511.2 /EXT3 (active low) - Pn511.3	0-3	Always OFF	
	4	44 (SI4)	10 (SI4)
	5	45 (SI5)	11 (SI5)
	6	46 (SI6)	12 (SI6)
	7	Always ON	
	8, 9-C	Always OFF	
EXT1 (active high) - Pn511.1 EXT2 (active high) - Pn511.2 EXT3 (active high) - Pn511.3	D	44 (SI4)	10 (SI4)
	E	45 (SI5)	11 (SI5)
	F	46 (SI6)	12 (SI6)

Input signal - Parameter name	Parameter setting	CN1 pin number	
		Sigma-II	Sigma-V
/BRK (active low) - Pn50F.2	0	Always OFF	
	1	25	1
	2	27	23
	3	29	25
IO12 - Pn81E.0 IO13 - Pn81E.1 IO14 - Pn81E.2 IO15 - Pn81E.3	0	Always OFF	
	1	40 (SI0)	13 (SI0)
	2	41 (SI1)	7 (SI1)
	3	42 (SI2)	8 (SI2)
	4	43 (SI3)	9 (SI3)
	5	44 (SI4)	10 (SI4)
	6	45 (SI5)	11 (SI5)
	7	46 (SI6)	12 (SI6)

For the Junma Servo Drive, all input signals are mapped to a fixed location on the CN1 I/O connector. The table below shows the input signals and pin numbers.

Input signal	CN1 pin number
P_OT (active high)	4
N_OT (active high)	3
DEC (active low)	1
EXT1 (active low)	2
BRK (active low)	13
E-STP (active high)	6

For the G-Series Servo Drive, all input signals are mapped to a fixed location on the CN1 I/O connector. The table below shows the input signals and pin numbers.

Input signal	CN1 pin number
P_OT (active high)	19
N_OT (active high)	20
DEC (active low)	21
EXT1 (active low)	5
EXT2 (active low)	4
EXT3 (active low)	3
E-STP (active high)	2
SI0 (active high)	22
SI1 (active high)	23
SI2 (active high)	6
PCL (active high)	7
NCL (active high)	8

For the Accurax G5 Servo Drives (when connected to MECHATROLINK-II or EtherCAT), the CN1 input pins IN1 to IN8 can be allocated to a specific function. To do this, you must set the appropriate parameter of the Servo Drive. The table below shows the parameters to allocate a function to a CN1 input pin.

Parameter number	Parameter name	Description
Pn400	Input Signal Selection 1	Set the IN1 input function allocation
Pn401	Input Signal Selection 2	Set the IN2 input function allocation
Pn402	Input Signal Selection 3	Set the IN3 input function allocation
Pn403	Input Signal Selection 4	Set the IN4 input function allocation
Pn404	Input Signal Selection 5	Set the IN5 input function allocation
Pn405	Input Signal Selection 6	Set the IN6 input function allocation
Pn406	Input Signal Selection 7	Set the IN7 input function allocation
Pn407	Input Signal Selection 8	Set the IN8 input function allocation

The table below lists the available functions which can be allocated to the CN1 input signals.

Signal name	Symbol	Set value	
		NO	NC
Disabled	---	00h	Setting not available
Forward drive prohibition input	POT	01h	81h
Reverse drive prohibition input	NOT	02h	82h
Emergency Stop Input	STOP	14h	94h
External Latch Input 1	EXT1	20h	Setting not available
External Latch Input 2	EXT2	21h	Setting not available
Origin Proximity Input	DEC	22h	A2h
External Latch Input 3	EXT3	28h	Setting not available
Forward External Torque Limit Input	PCL	2Ch	ACh
Reverse External Torque Limit Input	NCL	2Dh	ADh
Monitor Input 0	MON0	2Eh	AEh
Monitor Input 1	MON1	2Fh	AFh
Monitor Input 2	MON2	30h	B0h

For the Accurax G5-A/P Servo Drives, the CN1 input pins SI1 to SI10 can be allocated to a specific function. To do this, you must set the appropriate parameter of the Servo Drive. The table below shows the parameters to allocate a function to a CN1 input pin.

Parameter number	Parameter name	Description
Pn400	Input Signal Selection 1	Set the SI1 input function allocation.
Pn401	Input Signal Selection 2	Set the SI2 input function allocation.
Pn402	Input Signal Selection 3	Set the SI3 input function allocation.
Pn403	Input Signal Selection 4	Set the SI4 input function allocation.
Pn404	Input Signal Selection 5	Set the SI5 input function allocation.
Pn405	Input Signal Selection 6	Set the SI6 input function allocation.
Pn406	Input Signal Selection 7	Set the SI7 input function allocation.
Pn407	Input Signal Selection 8	Set the SI8 input function allocation.
Pn408	Input Signal Selection 9	Set the SI9 input function allocation.
Pn409	Input Signal Selection 10	Set the SI10 input function allocation.

The table below lists the available functions which can be allocated to the CN1 input signals.

Signal name	Symbol	Set value		Remarks
		NO	NC	
Disabled	---	00h	---	
Forward drive prohibition input	POT	01h	81h	
Reverse drive prohibition input	NOT	02h	82h	
Operation command	RUN	03h	83h	Assign to all control modes. This function is ANDed with the WDOG parameter.
Alarm reset input	RESET	04h	---	
Control mode switching input	TVSEL	---	---	Not supported
Gain switching	GSEL	06h	86h	
Error counter reset input	ECRST	---	---	Not supported
Pulse prohibition input	IPG	---	---	Not supported
Torque limit switching	TLSEL	09h	89h	
Damping filter switching 1	DFSEL1	0Ah	8Ah	
Damping filter switching 2	DFSEL2	0Bh	8Bh	
Electronic gear switching input 1	GESEL1	---	---	Not supported
Electronic gear switching input 2	GESEL2	---	---	Not supported
Internally set speed selection 1	VSEL1	---	---	Not supported
Internally set speed selection 2	VSEL2	---	---	Not supported
Internally set speed selection 2	VSEL3	---	---	Not supported
Zero speed designation input	VZERO	---	---	Not supported
Speed command sign input	VSIGN	---	---	Not supported
Torque command sign input	TSIGN	---	---	Not supported
Emergency stop input	STOP	14h	94h	
Inertia ratio switching input	J-SEL	15h	95h	
External Latch Input 1	EXT1	20h	---	SI4 only. Assign to all control modes.
External Latch Input 2	EXT2	21h	---	SI4 only. Assign to all control modes.

For more information on the CN1 I/O connector pins on the Servo Drives, refer to the specific Servo Drive manual.

Servo Drive inputs that are mapped into the Trajexia I/O space like this are accessed within the program per axis and cannot be accessed in the usual way with the **IN** command. The only way you can use these inputs in the

program is to assign them to the axis parameters **DATUM_IN**, **FHOLD_IN**, **FWD_IN** and **REV_IN**. The inputs of the axis Servo Drive are used, depending on the axis of which the parameters are set.

Example: We have a Sigma-II and a Junma drive assigned to controller axes 0 and 3. For the Sigma-II drive, we want to use input signal EXT1 (mapped to CN1-44 if Pn511.2 is set to 4) to serve as reverse limit input for axis 0. For the Junma drive, we want to use input signal EXT1 (CN1-2) as reverse limit for axis 3. We can do this with these commands:

REV_IN AXIS(0) = 22
REV_IN AXIS(3) = 22

Note that even though **REV_IN** parameters for both axes have the same value, the real inputs used are not the same. For axis 0 the input on CN1-44 of the Sigma-II drive (assigned to axis 0) is used, but for axis 3 the input on CN1-41 of the Junma drive (assigned to axis 3) is used. Therefore we say that those inputs are accessed per axis, they are not unique for the whole controller. In general, these two inputs have a different status at the same time. Also note that neither of these two inputs can be accessed using the command **IN**. For example the command **IN(22)** returns the status of controller software input 22 (unique for all axes), which has a different status than Servo Drive inputs mapped to the same number. However, the command **INVERT_IN(22)** inverts the status of input 22 read by the controller. It affects not only the unique software input 22, which is accessible with the **IN** command, but all axis-specific inputs 22, which in this example are the EXT1 inputs of the connected Servo Drives.

NOTE
If a forward limit, reverse limit and origin input signal are used for an axis, it is strongly recommended to use the following settings for the axis:

```
NOTEBASE(axis_number)
DAT_IN=18
' /DEC input in the corresponding Servo Drive is
' assigned

FWD_IN=16
INVERT_IN(16,ON)
' P_OT input in the corresponding Servo Drive is
‘ assigned. It is necessary to invert the signal
' because a Normally Closed input is expected.

REV_IN=17
INVERT_IN(17,ON)
' N_OT input in the corresponding Servo Drive is
‘ assigned. It is necessary to invert the signal
' because a Normally Closed input is expected
```

Also note that **INVERT_IN** inverts the selected input in all axes.

5.1.5 Origin search

The origin search or homing functionality is often seen as a particular sequence of movements of an axis at the start-up phase of the machine. This sequence is done automatically in most cases, without the input from the operator of the machine. In general, an origin search procedure couples a position to a specific axis. It depends on the encoders used (absolute or relative), on the system used (linear or circular), and on the mechanical construction of the machine. Absolute encoders do not need a movement during the origin search procedure, because the exact positions are transferred directly to the system. For other encoder types, a movement is necessary, since there is no knowledge of the exact position within the system. Basically, this movement is at low speed in some direction until a certain measuring point is reached. Such a measuring point can be scanned from both directions to increase the precision.

At startup, the current positions of the axes using incremental encoders are 0. Because these positions do not match with the mechanical 0 of the machine, it is necessary to execute the homing sequence. If an absolute encoder is used, the absolute position is read at startup from the encoder and homing is not necessary. In this case, a startup sequence must be executed one time during the machine commissioning.
In practice there are several different origin search sequences. They are different in these areas:

- The means used to detect limit positions of the moving part (sensors, switches, etc.)
- Origin (home) position or reference.
- Possible positions of the moving part related to limit positions and origin position.

Trajexia includes some pre-defined basic homing sequences:

- **DATUM(0)**
  This is not really an origin search. This command sets **DPOS=MPOS** and cancels the axis errors.
- **DATUM(1)**
  This does an origin search in forward direction using the Z mark of an encoder as homing switch.
- **DATUM(2)**
  Does an origin search in reverse direction using the Z mark of an encoder as homing switch.
- **DATUM(3)**
  Does an origin search in forward direction using the input selected in **DATUM_IN** as homing switch.
- **DATUM(4)**
  Does an origin search in reverse direction using the input selected in **DATUM_IN** as homing switch.
- **DATUM(5)**
  Does an origin search in forward direction using the input selected in **DATUM_IN** as homing switch and searches the next Z mark of an encoder.
- **DATUM(6)**
  Does an origin search in reverse direction using the input selected in **DATUM_IN** as homing switch and searches the next Z mark of an encoder.

For more details on these pre-defined homing sequences, see section 3.2.82.
In some situations, more complex homing sequences are required:

- Absolute switch origin search plus limit switches.
- Origin search against limit switches.
- Origin search against hardware parts blocking movement.
- Origin search using encoder reference pulse "Zero Mark".
- Static origin search, forcing a position from a user reference.
- Static origin search, forcing a position from an absolute encoder.

The figure shows a general origin search scenario. This simple origin search sequence has 3 steps:

1. Search for a signal.
2. Search for another signal.
3. Move the axis to a predefined position.

fig. 25

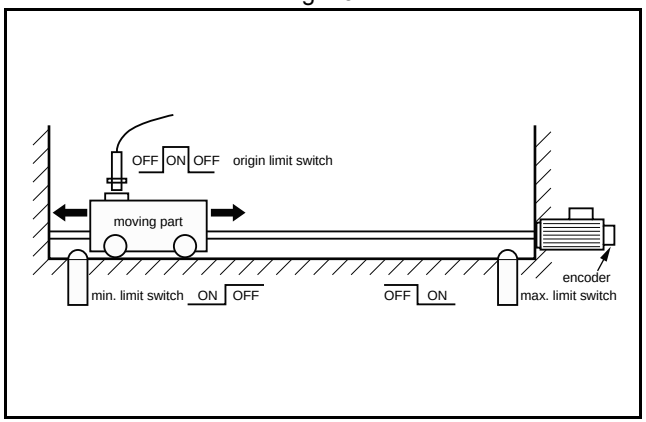

NOTE
For safety reasons, limit switches are normally closed. For this reason, in this figure and in the following figures in this section, the low signal level is indicated as ON, and the high signal level is indicated as OFF.

It is important to note that, before any homing procedure is executed, it is necessary to set the axis parameters **UNITS**, **REP_DIST** and **REP_OPTION**, and Servo Drive parameters Pn202, Pn203 and Pn205 properly and in accordance with the mechanical system and desired measurement units used in programming. Those parameters have influence to the origin search, especially if an absolute encoder is used. For more information on setting these parameters, see section 5.1.2.

Absolute switch origin search plus limit switches

The origin search function is performed by searching for an external limit switch that is positioned absolutely and the position of which defines the origin position. The example for this homing procedure is shown in the figure.

fig. 26

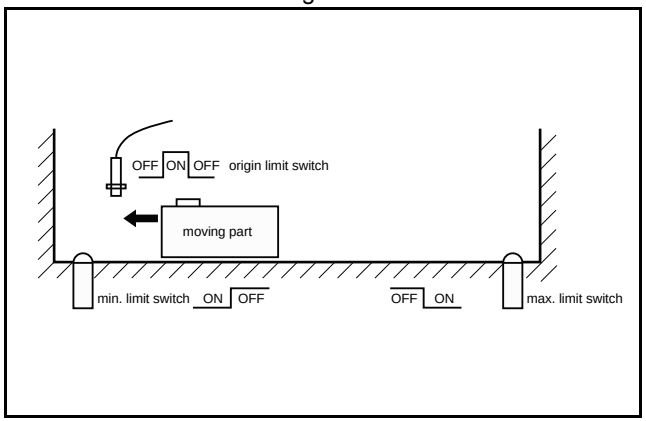

The figure shows the possible scenarios for absolute origin search plus limit switches. These scenarios depend on the position of the moving part when the power comes on.
The program example that does this origin search sequence is given below.

fig. 27

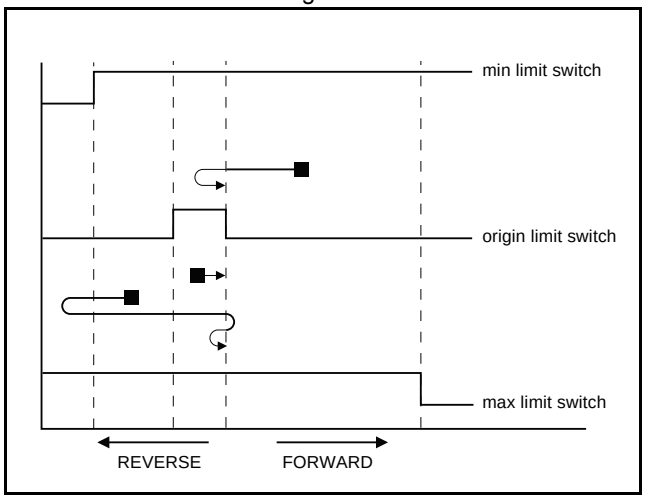


```
'Absolute origin switch: IN0
'Left limit switch: IN1
'Right limit switch: IN2
BASE(0)
DATUM_IN=0
FWD_IN=2
REV_IN=1
SERVO=ON
WDOG=ON
DATUM(4)
WA(1)
WAIT UNTIL MTYPE=0 OR IN(1)=OFF
IF IN(1)=ON
    FORWARD
    WAIT UNTIL IN(0)=ON
    WAIT UNTIL IN(0)=OFF
    CANCEL
    DATUM(4)
```

```
    WA(1)
    WAIT IDLE
ENDIF
```

Origin search against limit switches

This origin search function is performed by searching for an external sensor using limit switches only. The example for this homing procedure is shown in the figure.

fig. 28

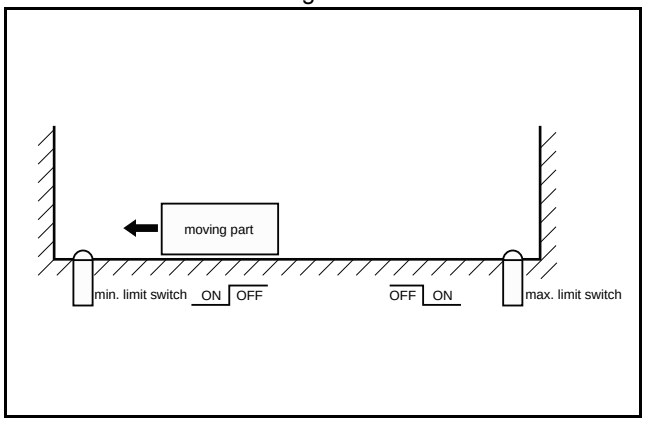

The possible scenarios for origin search against limit switches, depending on the position of the moving part on power on, are shown in the figure.
The program example that does this origin search sequence is given below.

```
'Origin and left limit switch: IN0
'Right limit switch: IN1
BASE(0)
DATUM_IN=0
SERVO=ON
WDOG=ON
DATUM(4)
WA(1)
WAIT IDLE
```

fig. 29

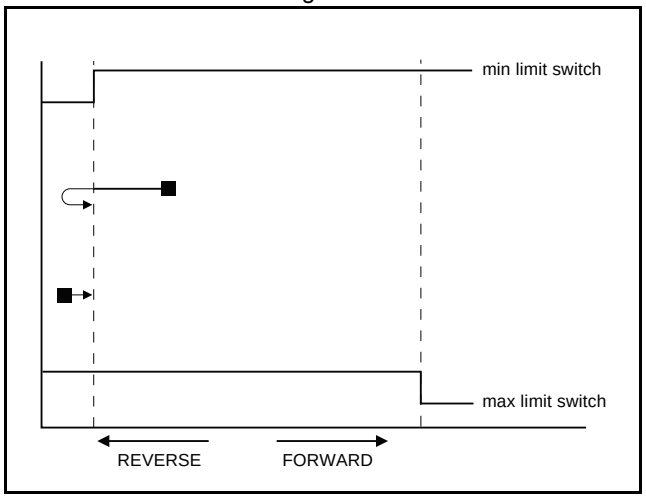

Origin search against hardware parts blocking movement

This origin search procedure performs origin search against a physical object and mechanically blocks the movement. There are no limit switches, no absolute position switch and no reference pulses. The origin position is detected by detecting a particular amount of torque against the blocking objects. An adequate torque limit is required in order not to damage the mechanics during the origin search process. The example for this homing procedure is shown in the figure.
The program example that does this origin search sequence is given below.

```
BASE(0)
DRIVE_CONTROL=11 'Monitor torque with DRIVE_MONITOR
SERVO=ON
WDOG=ON
```

This origin search procedure performs origin search by searching for the "Zero Mark" signal of the encoder. This signal is also known as "marker" or "reference pulse". It appears one time per full encoder revolution. The example for this homing procedure is shown in the figure.

fig. 30

```
SPEED=CREEP
REVERSE
WA(1)
WAIT UNTIL DRIVE_MONITOR < -100
    'Wait for particular amount of applied torque
CANCEL
DEFPOS(0)
MOVEABS(10) 'This is necessary, otherwise the position
            'is kept pushing the hardware limit of the
            'machine and the motor trips by overload
```

Origin search using encoder reference pulse “Zero Mark”

fig. 31

The possible scenarios for origin search using encoder reference pulse "Zero Mark", depending on the position of the moving part on power on, are shown in the figure.
The program example that does this origin search sequence is given below.

```
'Origin and left limit switch: IN0
'Right limit switch: IN1
REV_IN=-1
BASE(0)
DATUM_IN=0
SERVO=ON
WDOG=ON
DATUM(6)
WA(1)
WAIT IDLE
```

fig. 32

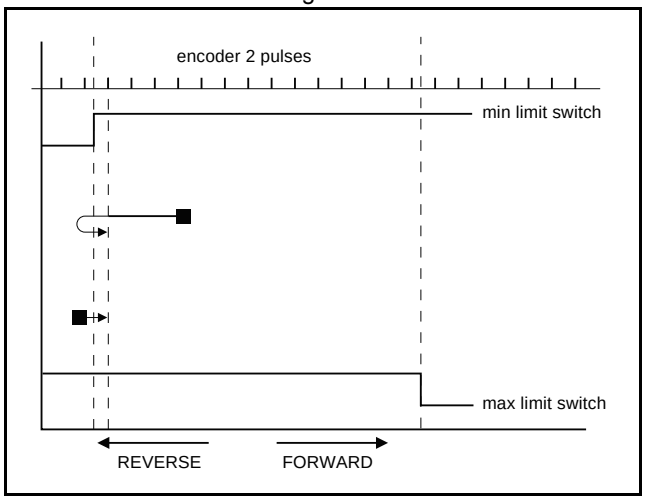

Static origin search, forcing a position from a user reference

This origin search procedure performs a static origin search by directly forcing an actual position. It does not perform any physical move.

```
DATUM(0)
```

Static origin search, forcing a position from an absolute encoder

This origin search procedure sets the actual position to the position of an absolute encoder. It does not perform any physical move. It is only possible with an axis with an absolute encoder in a control loop.

5.1.6 Registration

Registration, also called ‘latch’ or ‘print registration’, is about real-time storing of the position of an axis when an external input is activated. The information that is registered, i.e. stored, is processed later, not in real time, by the application program.
Registration is different from processing an interrupt input or signal. With registration, no event is generated when the registration input is activated. Also, the normal execution of the application program is not disturbed or interrupted. Only the position of an axis is stored. This information can be used, like other parameters or values, in a program. The registration information is available to a program immediately after the registration.

The advantage of registration is that it is done very quickly. Therefore, the axis position that is stored is very accurate. To achieve this speed and accuracy, registration is implemented with hardware, and the registration input must be on the same board as the encoder input that provides information on the axis position.
Capturing and storing the axis position is done in real time by the hardware. Processing this information is done not in real time by the application program.

The REGIST axis command

In Trajexia, you do a registration with the **REGIST** axis command. This command takes one argument. This argument determines which external input is registered, whether the registration is executed on the rising edge or on the falling edge of the input signal, whether the windowing function is used, and other options. For more information on the **REGIST** command, refer to sections 3.2.200, 3.2.201, 3.2.263, 3.2.264 and 3.2.265.
The registration differs for different axes depending on their connection to the system. If an axis is connected via the MECHATROLINK-II bus, the registration is done in the Servo Drive hardware. If an axis is connected via the Servo Drive analog interface and the TJ1-FL02, the registration is done in the hardware of the TJ1-FL02.
The different registrations are described below.

Registration in the Sigma-II and Sigma-V Servo Drive

Registration in the Sigma-II and Sigma-V Servo Drive occurs when an axis assigned to this Servo Drive is connected to the Trajexia system via the MECHATROLINK-II bus. There are three registration inputs on these Servo Drives, but only one hardware latch, so only one input can be used at a time. For Sigma-II Servo Drives the physical inputs are in pins CN1-44, CN1-45 and CN1-46 on the 50-pins CN1 connector. For Sigma-V Servo Drives the physical inputs are in pins CN1-10, CN1-11 and CN1-12 on the 26-pins CN1 connector. Trajexia uses logical inputs EXT1, EXT2 and EXT3 to associate the physical inputs to logical ones. This association is done by setting the parameter Pn511 of the Servo Drive. For more information on setting this association and Pn511 parameter, refer to the table below.

Registration signal	Parameter number	Parameter value	Description
EXT 1	Pn511.1	0 to 3	Not used
		4	Input from CN1 pin44 (Rising edge)
		5	Input from CN1 pin45 (Rising edge).
		6	Input from CN1 pin46 (Rising edge).
		7	Signal always OFF.
		8	Signal always ON.
		9 to C	Not used
		D	Input from CN1 pin44 (Falling edge).
		E	Input from CN1 pin45 (Falling edge).
		F	Input from CN1 pin46 (Falling edge).
EXT 2	Pn511.2	As for EXT 1	As for EXT 1
EXT 3	Pn511.3	As for EXT 1	As for EXT 1

The input used for registration is determined by the argument of the **REGIST** command.
The delay in the capture in the Sigma-II Servo Drive is about 3 µs. As the encoder information is refreshed every 62.5 µs, it is necessary to make interpolation to obtain the right captured position value (see the picture). Since the motor speed cannot change much during 62.5 µs, the resulting accuracy is very high.
The delays in transmission of the information are:

- Delay in triggering the registration: 0.625 ms to 4 ms.
- Delay in receiving the registration: 3.5 ms.
- Delay in capturing the registration: 3 µs.

It is also possible to use the encoder Z-mark to register an axis position. This is also done with the argument of the **REGIST** command.

Registration in the Junma Servo Drive

Registration in the Junma Servo Drive is the same as registration in the Sigma-II Servo Drive, with one difference: There is only one physical input and one logical latch too, so no settings of Servo Drive parameters are necessary. The physical input is associated to logical latch EXT1, and only the rising signal edge can be used for registration.

Registration in the G-Series Servo Drive

Registration in the G-Series Servo Drive is the same as registration in the Sigma-II Servo Drive, with one difference: There are three physical inputs but only one can be activated at a time. The physical input is associated to logical latch EXT1, EXT2 and EXT3, but the corresponding locations on the CN1 connector are fixed, so no settings of Servo parameters are necessary. Only the rising signal edge can be used for registration.
In contrast with other types Servo Drives, the G-series Servo Drives do not support executing registration while it is in base-block state. The registration can be executed on G-Series Servo Drives only when **WDOG** is set to ON. If registration is required when the G-Series Servo Drive is in base-block state, this workaround can be used: put the G-Series Servo Drive in torque mode with zero torque by executing:

- ATYPE=42
- T_REF=0

and then perform registration.

Registration in the Accurax G5 Servo Drive

In the Accurax G5 Servo Drives there are three registration inputs and two hardware latches. Trajexia uses logical inputs EXT1, EXT2 and EXT3 to associate the physical inputs to logical ones. This association is done by setting the parameters Pn404 to Pn406 of the Servo Drive. For more information on setting this association, refer to the tables below.

Parameter number	Parameter name	Description
Pn404	Input Signal Selection 5	Set the IN5 input function allocation
Pn405	Input Signal Selection 6	Set the IN6 input function allocation
Pn406	Input Signal Selection 7	Set the IN7 input function allocation

The table below lists the available settings to allocate EXT1, EXT2 and EXT3 to the CN1 input signals.

Signal name	Symbol	Set value
Disabled	---	00h
External Latch Input 1	EXT1	20h
External Latch Input 2	EXT2	21h
External Latch Input 3	EXT3	22h

In contrast with other types Servo Drives, the Accurax G5 Servo Drives do not support executing registration while it is in base-block state. The registration can be executed on Accurax G5 Servo Drives only when **WDOG**

is set to ON. If registration is required when the Accurax G5 Servo Drive is in base-block state, this workaround can be used: put the Servo Drive in torque mode with zero torque by executing:

- ATYPE=42
- T_REF=0

and then perform registration.

Registration in the Accurax G5-A/P Servo Drive

In the Accurax G5-A/P Servo Drives there are two registration inputs and two hardware latches. Trajexia uses logical inputs EXT1 and EXT2 to associate the physical inputs to logical ones. This association is done by setting the parameters Pn403 and Pn404 of the Servo Drive. For more information on setting this association, refer to the tables below.

Parameter number	Parameter name	Description
Pn403	Input Signal Selection 4	Set the SI4 input function allocation.
Pn404	Input Signal Selection 5	Set the SI5 input function allocation.

The table below lists the available settings to allocate EXT1 and EXT2 to the CN1 input signals.

Signal name	Symbol	Set value
Disabled	---	00h
External Latch Input 1	EXT1	20h
External Latch Input 2	EXT2	21h

Registration in the TJ1-FL02

The TJ1-FL02 has two physical registration inputs, and two latch circuits per encoder input, which can be used independently. Therefore two independent registration inputs can be used at the same time. For more information on how to use both registration inputs of the TJ1-FL02 at the same time, refer to sections 3.2.200, 3.2.201, 3.2.263, 3.2.264 and 3.2.265.
The delay in the capture is 0.5 µs. Because the encoder position is read continuously from the line-drive encoder input, interpolation is not necessary. The delay for the transmission of the captured information is just one **SERVO_PERIOD** cycle.

Registration in the TJ2-KS02

The TJ2-KS02 has three physical registration inputs, and two latch circuits for the encoder input. Two independent registration inputs can be used at the same time. For more information on how to use both registration inputs of the TJ1-FL02 at the same time, refer to sections 3.2.200, 3.2.201, 3.2.263, 3.2.264 and 3.2.265.
The delay in the capture is 0.5 µs. Because the encoder position is read continuously from the line-drive encoder input, interpolation is not necessary. The delay for the transmission of the captured information is just one **SERVO_PERIOD** cycle.

Using registration in application programs

There is one axis command (**REGIST**), and two axis parameters (**MARK** and **REG_POS**). With these commands and parameter, you can control and use the registration functionality in BASIC programs.

- **REGIST** captures the axis position when a registration signal is detected. The available settings depend on the axis type. Refer to section 3.2.265.
- **MARK** is a flag that signals whether the position has been captured or not. For the secondary registration input the parameter **MARKB** is available. For more information, refer to sections 3.2.200 and 3.2.201.
- **REG_POS** holds the captured axis position. Only if the **MARK** flag signals that the position was captured successfully, you can regard the **REG_POS** value as valid. For the secondary registration input the parameter **REG_POSB** is available. For more information, refer to sections 3.2.263 and 3.2.264.

The picture gives the sequence of executing the commands and the registrations of the sample program below.

```
BASE(N)
REGIST(0)
WAIT UNTIL MARK=0
loop:
    WAIT UNTIL MARK=-1
    PRINT "Position captured in: "; REG_POS
    REGIST(0)
    WAIT UNTIL MARK=0
GOTO loop
```

fig. 34

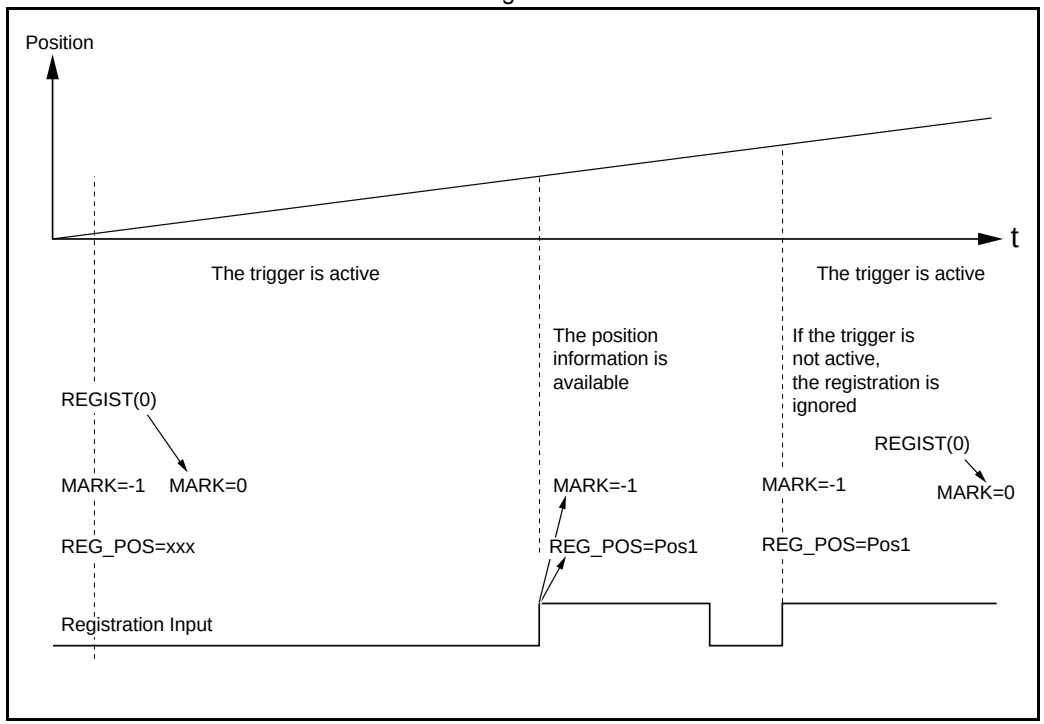

Registration and windowing function

The windowing function enables for registration to occur only within a specified range of axis positions. This function is selected by giving the right value as an argument for the **REGIST** command. The windowing function is controlled by two axis parameters, **OPEN_WIN** and **CLOSE_WIN**. For more information on **REGIST**, **OPEN_WIN** and **CLOSE_WIN**, refer to sections 3.2.60, 3.2.239 and 3.2.265.
There are two types of windowing:

- Inclusive windowing allows the registration to occur only within the specified window of axis positions. With this windowing function, registration events are ignored if the axis measured position is less than the **OPEN_WIN** axis parameter or greater than the **CLOSE_WIN** parameter.
- Exclusive windowing allows the registration to occur only outside the specified window of axis positions. With this windowing function, the registration events are ignored if the axis measured position is greater than the **OPEN_WIN** axis parameter or less than the **CLOSE_WIN** parameter.

fig. 35

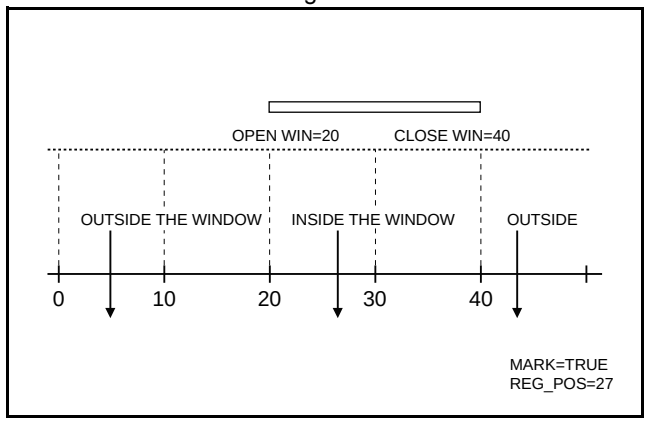

When the windowing function is used, the internal process is as follows:

1. **REGIST** + window is executed in the program.
2. **MARK** = 0 and the latch is triggered.

3. The position is captured and transmitted to the Trajexia processor.
4. Is the captured position inside the inclusive window or outside the exclusive window?
   - If yes, **MARK** = -1 and **REG_POS** is updated.
   - If not, return to point 2 (trigger the latch again transparently to the user).

The figure shows the sequence of execution of the above commands and the occurrence of registration events when you use inclusive windowing. There are delays between these events:

- Trajexia receives the latch.
- Trajexia decides to trigger the latch again.
- The latch is triggered.

Because of these delays, there is an uncertainty in the edges of the window when marks may be detected near the edges. This is more notable for axes connected to the system via the MECHATROLINK-II bus due to bus delays. To compensate for these delays, a user must set the window margins large enough.

fig. 36

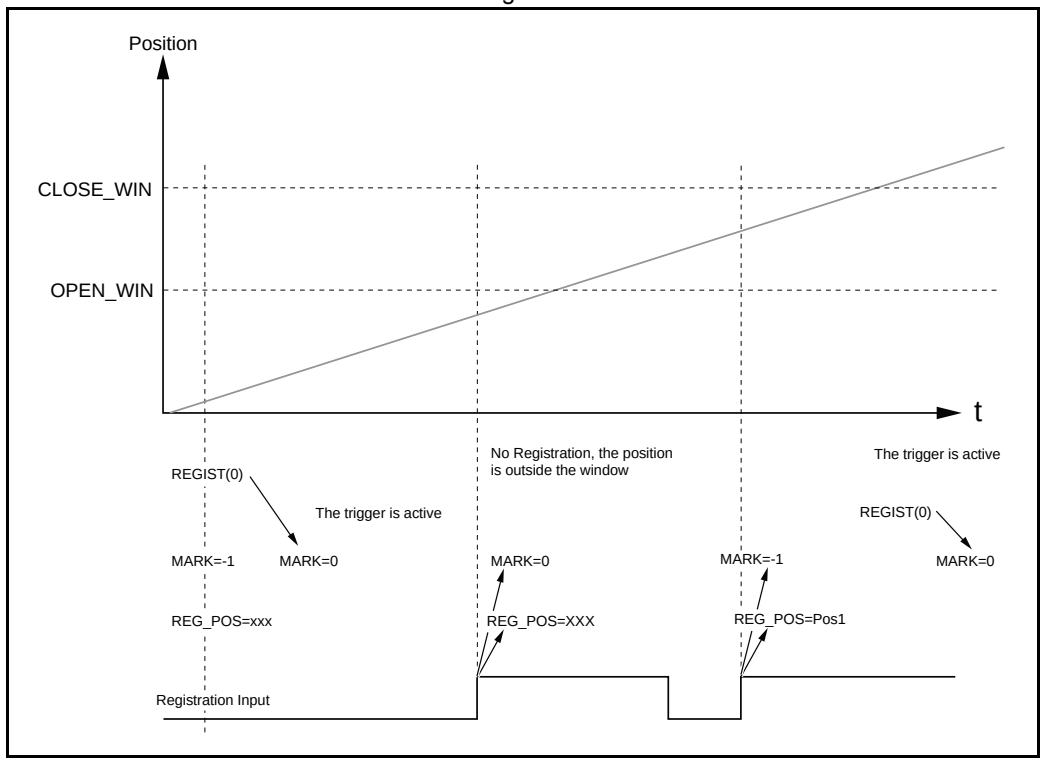

Example: Correcting the position of an axis

The picture shows the vertical fill and seal machine for packaging products into bags. The bag material comes from a plastic film coil that is unwinded, then it is shaped into the tube by a mechanical mandrel and at the same time the tube is sealed vertically. The feeder movement is intermittent and the feed length corresponds with the bag length. Once the bag is fed, the horizontal sealer closes the bag, so it can be filled with the product. After that, the process starts again, feeding the new bag.

fig. 37

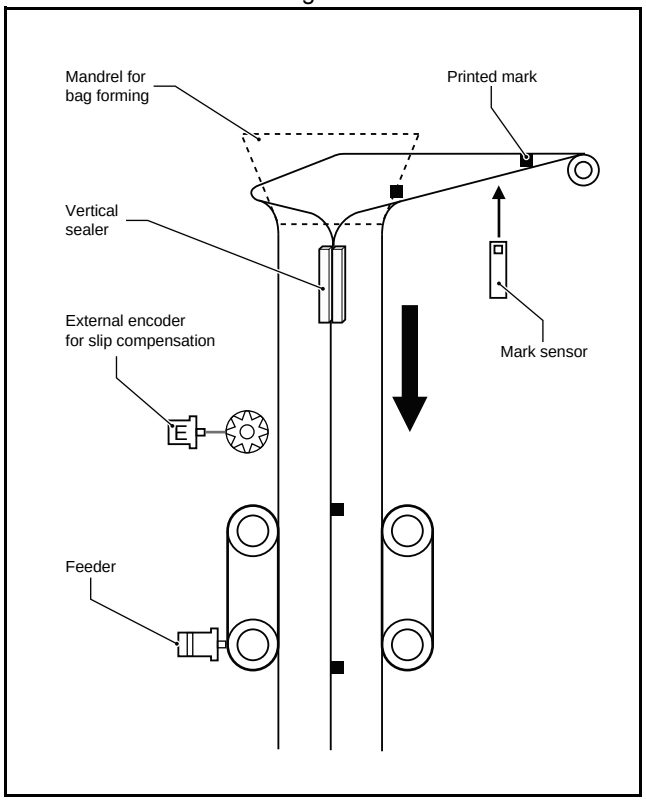

The feeder can work in two modes: without registration mark; and with registration mark. Working without the registration mark is a simple point-to-point incremental movement. In this case, there is no guarantee that the feeder moves exactly the same distance as the design pattern. For example, suppose the bag length that needs to be fed is 200 mm, but the real pattern is 200.1 mm. With simple point-to-point incremental movement without correction, an error of 0.1 mm per bag is accumulated. With a small number of bags the difference is not visible, but after 500 bags the error is 50 mm, which is a 25% of the bag length.

fig. 38

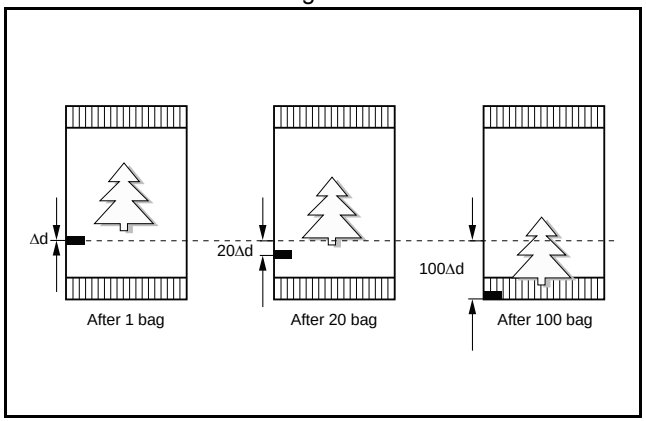

When working with registration marks, the motion controller executes an incremental movement to a certain position. If during the positioning the registration mark is detected, the target position is changed on the fly in order to finish the movement at a defined position after the registration mark. Therefore, the same distance in respect to the registration mark is always guaranteed.

fig. 39

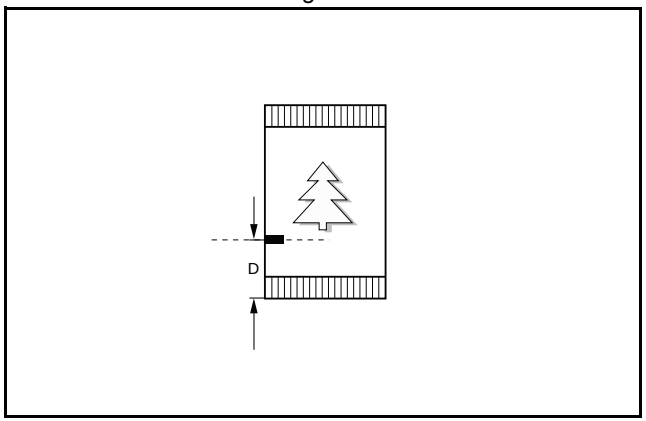

The motion profile and its modification due to the registration mark are shown in fig. 39.
The BASIC program for this example is:

```
DEFPOS(0)
REGIST(3)        'Trigger the mark registration
MOVE(bag_length) 'Move to the theoretical distance
WA(1)
WAIT UNTIL MARK OR MTYPE=0
IF MARK THEN
    end_position=REG_POS+distance_after_mark
    MOVEMODIFY(end_position)
    'Correct the distance according to the mark
ENDIF
```

fig. 40

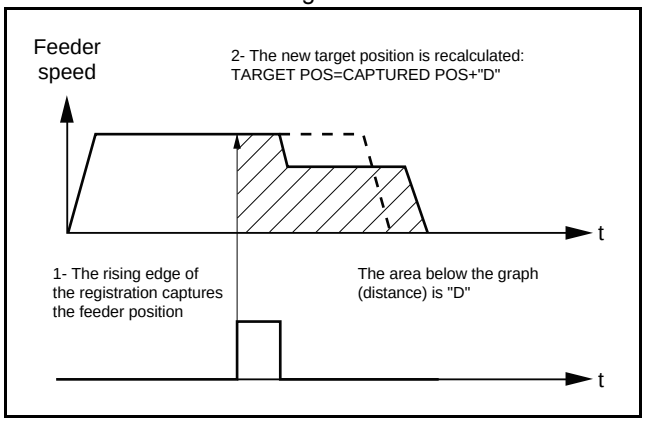

Example: Starting a slave axis in precise position of a master axis

The picture shows a flying shear cutting the "head" of wood tables. When the wood comes, the edge of the wood is detected by the photocell and, at the exact moment, the movement of the flying shear starts to be synchronized with the right position on the wood.
If the movement is started by the program, upon detecting a signal from the photocell, there is always at least one **SERVO_PERIOD** of time of uncertainty. Instead, the movement is started using the **MOVELINK** command with **link_option=**1, which means that the link to the master axis starts when the registration event occurs on link (master) axis.
The corresponding program sequence is:
REGIST(2) AXIS(master)
MOVELINK(dst,lnk_dst,lnk_acc,lnk_dec,master,1) AXIS(slave)
For more information on the **MOVELINK** command and the **link_option** argument, refer to section 3.2.213.

fig. 41

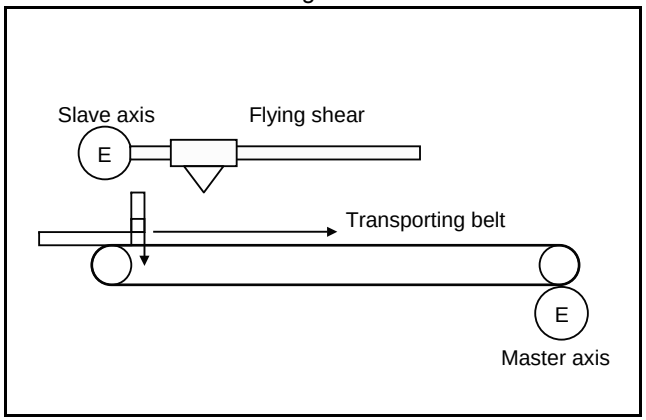

The picture shows how the position of the slave axis is corrected using the registration event on the master axis to start the movement of the slave axis. The influence of **SERVO_PERIOD** and the fact that the registration event can happen at any time inside the **SERVO_PERIOD** is completely eliminated.

fig. 42

5.1.7 Tracing and monitoring

Oscilloscope functionality in Trajexia Studio

The software oscilloscope is a standard part of Trajexia Studio. The oscilloscope can be used to trace and graphically represent axis and system parameters. This can help you with development, commissioning and troubleshooting of the motion system. For more information on the software oscilloscope and its features and capabilities, refer to the Trajexia Studio manual.

You can trigger the oscilloscope to start tracing given axis and system parameters in two ways: manually or by a program. Triggering manually is done using the data trace. The parameters are stored in the Table memory of the controller. The range of the Table memory where the parameters are stored can be set in the **Memory Manager** of the device configuration (see the Trajexia Studio manual). With manual triggering, the user can see the changes of axis and system parameters in real time, as the system runs. A change in parameter values is graphically represented as soon as the change happens. The limitation of manual triggering is that it requires user interaction, which means that the start of tracing is not synchronized with the movement that is analysed. Also, with manual triggering the tracing range is limited to 200 samples per channel.

Using the oscilloscope

The alternative, triggering by a program, does not have the limitations of manual triggering of the tracing. Triggering by a program stores the axis and system parameters in the memory of the TJ2-MC__. Later, the parameters are given to the oscilloscope for graphical representation. The axis and system parameters are stored in the Table memory. The memory range used is defined by the parameters of the **SCOPE** command. When the parameters are in the Table memory, the oscilloscope can be configured to show a range of Table memory locations instead of axis and system parameters. The exact moment when the tracing is started can be exactly determined because it is controlled by the **TRIGGER** command. This means

the start of tracing is synchronized with the movement.There is no limitation of 200 samples per channel, the oscilloscope shows as many samples (Table entries) as configured in the **Oscilloscope Configuration** window.

Example

This section gives you a practical example on the use of the **SCOPE** and **TRIGGER** commands, and how to use them in combination with the oscilloscope to monitor axis parameters and troubleshoot the system. For more information on the **SCOPE** and **TRIGGER** commands, refer to sections 3.2.284 and 3.2.322.

Suppose the motion system consists of two axis, **AXIS(0)** and **AXIS(1)**. **AXIS(0)** is the master axis. It makes a simple forward movement. **AXIS(1)** is the slave axis. It must follow the master axis in accordance to cosine rule:

$$x_1 = end_pos \cdot \frac{1}{2}\left(1 - \cos\left(\frac{2\pi \cdot x_0}{999}\right)\right)$$

where x_0 is the position of the master **AXIS(0)**, and x_1 is the position of the slave **AXIS(1)**. You can link the two axis with the **CAMBOX** command. For more details, refer to section 3.2.51. Suppose furthermore that the parameter **end_pos** is not constant, but it can change due to different conditions of the motion system. The part of the program that creates the CAM table is:

```
'Initial CAM values
VR(end_pos)=15
current_end_pos=VR(end_pos)
FOR i=0 TO 999
    TABLE(i, VR(end_pos)*(1-COS(2*PI*i/999))/2)
NEXT i
...
loop:
IF VR(end_pos)<>current_end_pos THEN
'Recalculate the CAM Table
    FOR i=0 TO 999
        TABLE(i, VR(end_pos)*(1-COS(2*PI*i/999))/2)
```

fig. 43

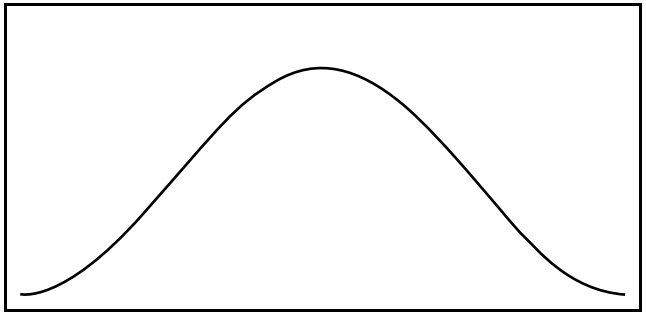

```
    NEXT i
    current_end_pos=VR(end_pos)
ENDIF
...
GOTO loop
```

The **VR(end_pos)** value can be changed from some other program or externally from another controller using FINS messaging. In this case, the **CAM** table must be recalculated.
The creation of the CAM table is complete. The initialization of the desired axis and system parameters for tracing is:

```
'Initializations
FOR i=0 TO 1
    BASE(i)
    ATYPE=40
    UNITS=8192
    REP_DIST=20
    REP_OPTION=1
    FE_LIMIT=1
    DRIVE_CONTROL=11
    SPEED=8
    ACCEL=50
    DECEL=50
    DEFPOS(0)
    SERVO=ON
    CANCEL
NEXT i
WDOG=ON
BASE(1)
'Scope settings:
'1 sample each 2 servo cycles
'Information stored in TABLE(1000) to TABLE(4999)
'Because we capture 4 channels, we have 1000 samples per
channel.
'MPOS AXIS(0) is stored in TABLE(1000) to TABLE(1999)
'DPOS AXIS(1) is stored in TABLE(2000) to TABLE(2999)
```

```
'Torque reference for AXIS(1) is stored in
'TABLE(3000) to TABLE(3999)
'MSPEED AXIS(1) is stored in TABLE(4000) to TABLE(4999)
'The capture covers 1000 samples * 2ms / sample = 2seconds
SCOPE(ON,2,1000,4999,MPOS AXIS(0),DPOS,DRIVE_MONITOR,MSPEED)
FORWARD AXIS(0) 'Move the master axis forward
TRIGGER 'Start tracing and storing of parameters
WHILE NOT MOTION_ERROR
    'Cambox that will start in AXIS(0) position 1
    CAMBOX(0,999,UNITS,10,0,2,1)
    WAIT UNTIL MPOS AXIS(0)<1
    'The capture will start when the master axis is in
    'a position Between 0 and 1. Additional conditions
    'are:
    '- The previous capture has finished
    '(SCOPE_POS=1000)
    '- We have the permission (VR(activate_trigger)=ON)
    IF SCOPE_POS=1000 AND VR(activate_trigger)=ON THEN
        TRIGGER
        PRINT "Triggered"
    ENDIF
    WAIT IDLE
WEND
HALT
```

The result is given in the figure.

fig. 44

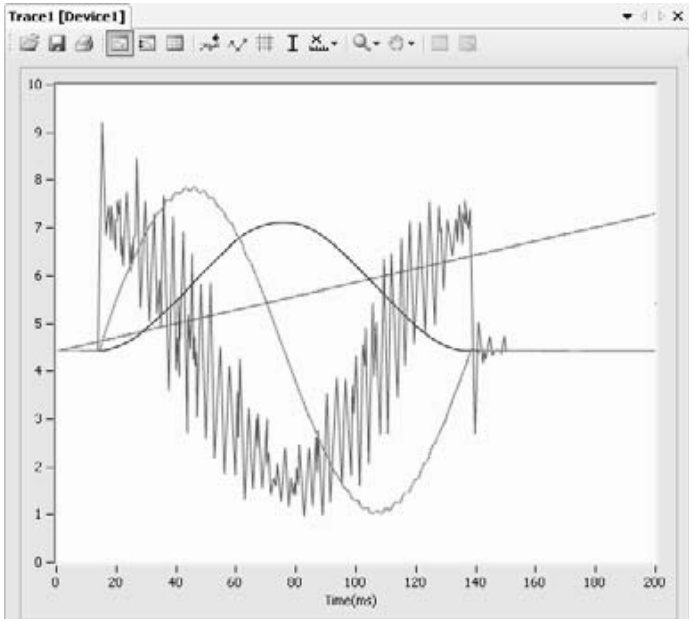

In the example given above, the value of the **UNITS** parameter is set to encoder counts. The position of the master axis **MPOS AXIS(0)** is given in red. The position increases linearly, because the speed of the master axis is constant.
The demanded position of the slave axis **DPOS AXIS(1)** is given in blue. This graph is a cosine curve. It corresponds to the created CAM table.
The measured speed of the slave axis **MSPEED AXIS(1)** is given in yellow. This graph is a sinusoidal curve, because the speed is a derivative of the position, and the derivative of the cosine is the sine. At high speeds, there are some ripples.
The green graph is the torque of the motor for the slave axis set with **DRIVE_COMMAND=11** as a percentage of the nominal torque. The torque is proportional to the acceleration. Because the acceleration is a derivative of the speed and the speed is sinusoidal curve, the acceleration (and also the torque) is a cosine curve. There is one peak at the start and another peak at the stop because there is a discontinuity in the acceleration. There is also a high frequency oscillation in the torque curve, suggesting a resonance frequency that can be eliminated using the notch filter settings in the Sigma-II Servo Drive. The high frequency is reinforced, because it is also reflected in the speed curve. For more information on notch-filter settings, refer to the Sigma-II Servo Drive manual.

Troubleshooting with the oscilloscope

When the desired data is captured and recorded into the Table memory entries, you can use the oscilloscope to visualize this data. This can help you when you commission and troubleshoot the system. This section gives an example of how a bug, which is difficult to analyse, can be clearly explained and solved using the captured data and the oscilloscope.

The parameter **end_pos**, which defines the values in the CAM table, depends on external conditions of the system. Therefore a program that runs in another task or even a controlling device using FINS communication, can change it while the main program that links two axis runs. Suppose that these changes in conditions, which result in a change of the **end_pos** parameter, happen most of the time when the axes are not linked, i.e. when the **CAMBOX** command is not executed. Suppose furthermore that very rarely the condition changes when the axes are linked. The change of the **end_pos** parameter triggers the recalculation of the CAM table while the **CAMBOX** command is executed. The consequence is that the part of the demanded position of the slave axis follows the profile before the change, and the other part follows the profile after the change. In the end this leads to a discontinuation of the profile, which causes an indefinite speed of the axis and ends up with this error: the WDOG goes off, and all axes stop.
The scenario above is hard to analyse when you do not know what happens. The only thing that the user sees is that the slave axis has an error once every few hours or even less often. But the oscilloscope can clearly show where the problem is. In order to be able to use the oscilloscope, all desired parameters must be captured at the time of an error. This can be achieved by arranging the application programs in a certain way. The good programming practice suggests to have a separate start-up program that is set to run automatically on power-up of the system and checks the integrity of the system, whether all the expected devices are connected and initialized. It is recommended to let the start-up program, when it is finished, start only one program that takes care of the safety and integrity of the application and execution of all other application programs. This program is usually referred to as a SHELL program. For more information on designing a SHELL program, see section 5.2.1.
Suppose that program is designed in a way the it contains a following fraction of code:

```
'When there is an error, we stop all programs. No new
'oscilloscope captures are done. And we have stored in
'the selected TABLES the last data trace in which the
'error has occurred. Therefore, we can recover this
'trace and analyze it.
loop:
    IF MOTION_ERROR<>0 THEN HALT
GOTO loop
```

fig. 45

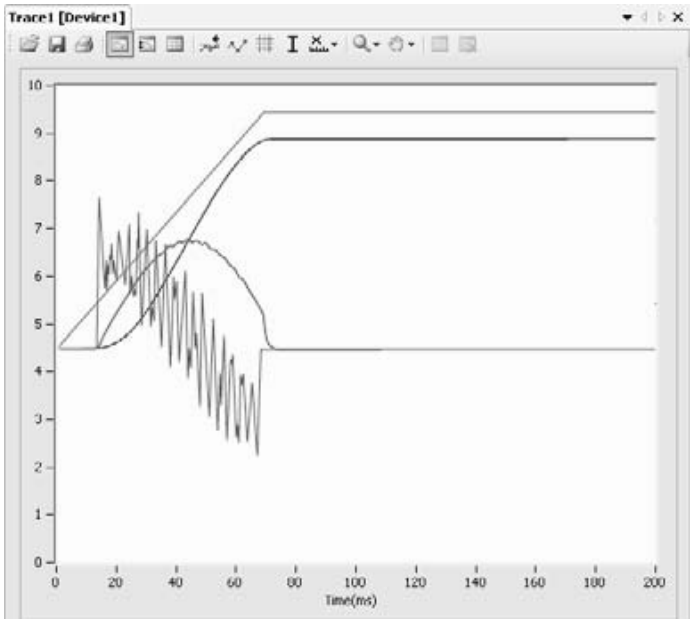

This programming code causes all the programs and tracing to stop when an error happens on any axis. The data is already captured in the Table memory, and we can start using the oscilloscope to see the status of the desired parameters at the moment the error occurred.
The measured position of the master axis, given in red, does not seem to be the cause, because there is no discontinuity on it. We discard a mechanical problem as well, because the torque, given in green, has low values. An the moment of the problem the speed of the slave axis, given in yellow, was smooth and low, therefore this is no problem either.
The next step is to analyse the CAM table, to see which values were used for demanding the position of the slave axis. To do that, we change the data trace to show a block of values from Table(0) to Table(999) in red, because these entries are where the CAM table is created (see the part of the program that creates the CAM table above). The changed configuration is shown in the figure.

fig. 46

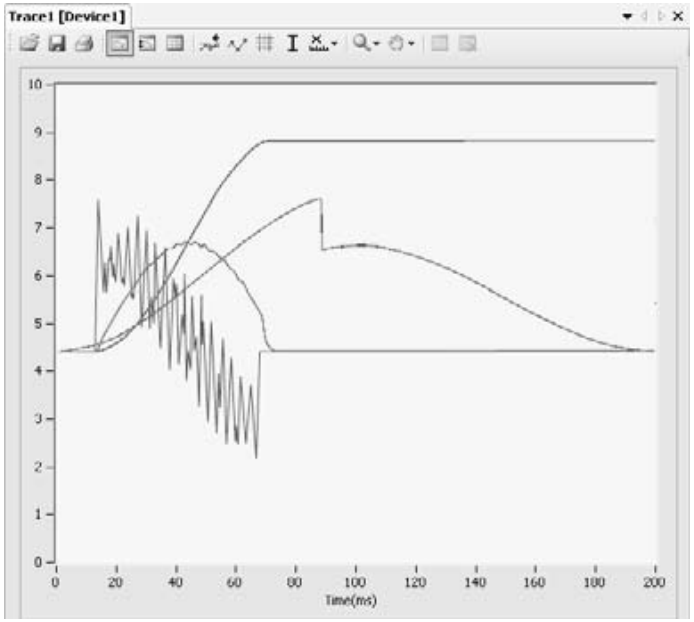

The result is given in the figure. The red graph clearly shows a discontinuity in the position values that the slave axis must follow. Because the speed is a derivative of the position, at the point of discontinuity of the position curve the speed gets a high value. (This value equals infinity in theory, in practice the value is just very big). This causes the error. The red graph shows where the root of the problem is. The amplitude of the cosine curve, and therefore the **end_pos** parameter, has been changed during the execution of the **CAMBOX** command. The solution is simple: A change of the **end_pos** parameter during **CAMBOX** execution must be prevented. To do this, either modify the programs in Trajexia, or in some other controller (if the parameter is changed outside of the scope of the application programs, for example by a FINS message).

NOTE
The time base of the CAM TABLE points is not the same as the capture of the other signals. The discontinuity in the CAM (red graph) coincides in time with the interruption of the movement. To analyse this, check the position values individually with a spreadsheet program. To analyse the point values in detail, you can export the TABLE points to a spreadsheet program for a more complex analysis.

5.2 Practical examples

5.2.1 SHELL programs and Trajexia Studio

fig. 47

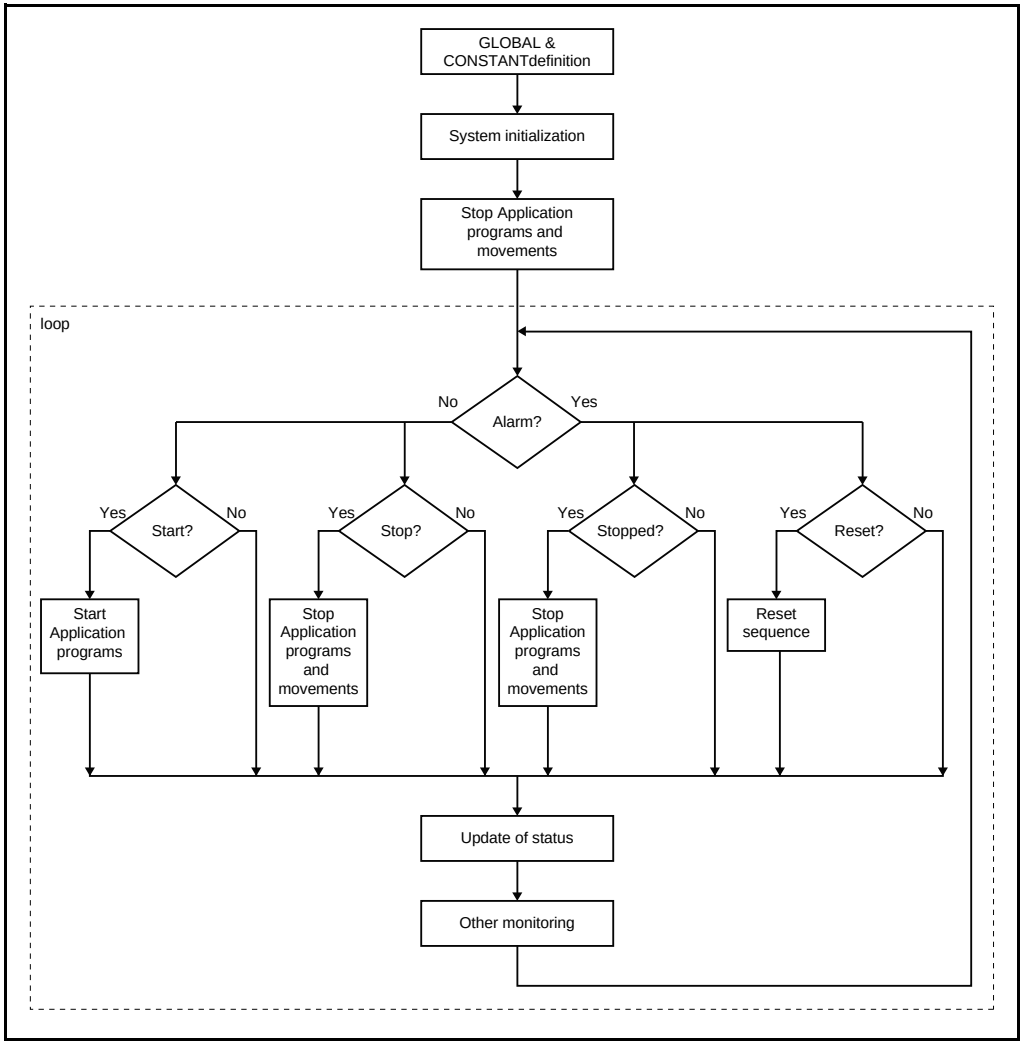

Trajexia Studio helps the user to create a proper SHELL program.

When a new project is created, a SHELL program with the basic structure is created automatically (see 5.1.1).

When you define the hardware and set the parameters for the application, you can select to add your changes to the SHELL program so, the user do not have to type it manually.

Use the example SHELL program as a template to start, stop and reset your machine and adjust the rest of the SHELL program according to the requirements.

The SHELL program is automatically selected to start at POWER-ON in low-priority task 1.

Example

The example program below is a typical SHELL program created by Trajexia Studio.

```
'=========================================================
'This SHELL program is an example that OMRON provide as
'recommended. This program should be modified for the
'particular user application.
'=========================================================

'Reserved symbol area for SHELL program handling.
'Do not use these areas in your application programs:

'VR(900) - "status_word" reports about the status of the 'system
'   =0 during initialization
'   =1 application stopped with no error
'   =2 errors in the system
'   =3 application running
'VR(901) - VR(status_bits) reports next status
'   Bit0    Alarm flag
'   Bit15   ML communication error with one slave

'VR(902) - "action" send messages to the upper controller
'   =0 during initialization
'   =1 Push RESET to restart
'   =2 Resetting
'   =3 System healthy

'VR(903) - VR(diag01) gives feedback of the MECHATROLINK
'initialisation
'   Bit0    Could not get the ML slave number
'   Bit1    Slave number is uncorrect
'   Bit15   Detection OK

'VR(904) - VR(diag02) gives feedback of the MECHATROLINK
'Slaves
'   Bitn    Slave n not detected

'VR(905) - VR(diag03) gives feedback forUnit detection
'   Bitn    Unit n detected

'VR(906) - VR(system01) used in system detection

'VR(907) - VR(signal_state) gives feedback on signal state

'VR(908) - "sys_error" system error detected

'VR(909) - "first_error" gives the axis number causing a
'motion error

'VR(910,912 ... 940) - VR(servo_status+axis_n*2) stores
'AXISSTATUS to report to upper controller

'VR(911,913 ... 941) - VR(servo_alarm+axis_n*2) stores the
'alarm code of the servo
'Omron Auto Generated - Symbols
'Warning: Automated code section - any manual code changes
will be lost.
```

First action is to declare the GLOBAL variables and CONSTANTS and make other initialization

```
'Omron Auto Generated - Globals
GLOBAL "length",0
```

```
GLOBAL "lot_n",1
GLOBAL "product_type",2
GLOBAL "machine_speed",3
GLOBAL "status_word",900 'SHELL
GLOBAL "action",902 'SHELL
GLOBAL "sys_error",908 'SHELL
GLOBAL "first_error",909 'SHELL

'Omron Auto Generated - Constants
CONSTANT "max_axis",15 'SHELL
CONSTANT "status_bits",901 'SHELL
CONSTANT "diag01",903 'SHELL
CONSTANT "diag02",904 'SHELL
CONSTANT "diag03",905 'SHELL
CONSTANT "system01",906 'SHELL
CONSTANT "signal_state",907 'SHELL
CONSTANT "servo_status",910 'SHELL
CONSTANT "servo_alarm",911 'SHELL

'ETHERNET Settings
ETHERNET(1,-1,12,9600) 'FINS port number
ETHERNET(1,-1,7,0) 'Modbus TCP Mode
ETHERNET(1,-1,9,0) 'Modbus TCP Data Configuration

'Omron Auto Generated - CAM TABLE

'Omron Auto Generated - Symbols End

'Omron Auto Generated - Local Variables
alarm_bit=0
i=0 'Servo Parameters
res=0 'Servo Parameters
res_act=0
res_ant=0
res_bit=0
run_act=0
run_ant=0
run_bit=0
stop_act=0
stop_ant=0
stop_bit=0
'Omron Auto Generated - Local Variables End

VR(signal_state) = 0
```

This subroutine tests whether the detected hardware is the expected one or not. If the right hardware is detected, it sets the right values to the axes and servo drives

At least the right system needs to be properly detected
'once
GOSUB system_detection

This subroutine stops all possible running programs and movements.

'Stop all potential programs movements
GOSUB stop_all

status_word=1

The main loop of the program handles the fault handling: run application programs, stop application programs, reset the system and report the status.

```
loop:

    IF alarm_bit THEN
        action=1 ' Alarm, push RESET to restart

        IF status_word<>2 THEN
            PRINT "Stop with Alarm"
            GOSUB stop_all
            status_word=2 'Programs stopped with error
```

```
        ENDIF

        IF res_bit=1 THEN
            action=2 'Resetting
            PRINT "Resetting"
            GOSUB reset_all
            status_word=1 'Programs stopped NO error
        ENDIF
    ELSE
        action=3 'OK

        IF run_bit=1 THEN
            PRINT "Start application"
            GOSUB start_app
            status_word=3 'Application running
        ENDIF

        IF stop_bit=1 AND status_word=3 THEN
            PRINT "Stop by command"
            GOSUB stop_all
            status_word=1
        ENDIF
    ENDIF

    'Evaluates rising edge in RUN, STOP & RESET bits
    GOSUB sequence


    'Checks for alarms in the system and monitors the
    'system status
    GOSUB alarm_sequence

    'Upgrade values for showing in the HMI & PLC
    GOSUB monitoring

    'Reports and reset warnings in servodrive
    GOSUB warning_seq
    GOTO loop

    '-------------------------------------------------------

    sequence:

    'Define here your signals to STOP/START/RESET

    'This example uses the following signals:
    'Rising edge of bit 0 of VR(signal_state) as RUN signal
    'Rising edge of bit 1 of VR(signal_state) as STOP signal
    'Rising edge of bit 2 of VR(signal_state) as RESET signal

    'RUN
    run_ant=run_act
    run_act=READ_BIT(0,signal_state)
    run_bit=run_act AND NOT run_ant

    'STOP
    stop_ant=stop_act
    stop_act=READ_BIT(1,signal_state)
    stop_bit=stop_act AND NOT stop_ant

    'RESET
    res_ant=res_act
    res_act=READ_BIT(2,signal_state)
    res_bit=res_act AND NOT res_ant
    RETURN

    '-------------------------------------------------------

    alarm_sequence:

    'Alarm notification
    IF SYSTEM_ERROR=0 AND MOTION_ERROR=0 AND READ_BIT(15,diag01)=1
    THEN
```

```
    alarm_bit=0
ELSE
    IF MOTION_ERROR<>0 THEN
        SET_BIT(0,status_bits) 'Motion error flag
        first_error=ERROR_AXIS
    ENDIF
    alarm_bit=1
ENDIF

'MECHATROLINK axis alarm monitoring
FOR i=0 TO max_axis
    BASE(i)
    VR(servo_status+i*2)=AXISSTATUS
    'if stopped by alarm, notify the alarm code
    IF ATYPE>=40 AND ATYPE<=42 THEN
        IF status_word=2 THEN
            'if no response, notify "communication alarm"
            IF (AXISSTATUS AND 4)<>0 THEN
                VR(servo_alarm+i*2)=$E6
            ELSEIF NOT DRIVE_ALARM(servo_alarm+i*2) THEN
                VR(servo_alarm+i*2)=$E6
            ELSEIF VR(servo_alarm+i*2)=0 THEN
                VR(servo_alarm+i*2)=$bb
            ENDIF
        'if no alarm, notify RUN=$99 or BaseBlock=$BB
        ELSEIF(DRIVE_STATUS AND 8) THEN
            VR(servo_alarm+i*2)=$99

 ELSE
            VR(servo_alarm+i*2)=$bb
        ENDIF
    ENDIF
NEXT i

    sys_error=SYSTEM_ERROR
RETURN
```

```
'-------------------------------------------------------

stop_all:

'In this example, if the application program is stopped
'suddenly all the movements are cancelled and all the axes
'are set to BaseBlock. Modify this section if you require
'a different STOP procedure

STOP "APPLICATION"
WDOG=0

FOR i= 0 TO max_axis
    BASE(i)
    IF MARK=0 THEN REGIST(-1)
    AXIS_ENABLE=0
    SERVO=0
    CANCEL(1) 'Cancel NTYPE
    WA(1)
    CANCEL(1) 'Cancel possible program buffer
NEXT i

RAPIDSTOP 'Cancel MTYPE
RETURN

'-------------------------------------------------------

start_app:

'Add all the application programs that should be started
'with the START signal

RUN "APPLICATION"

RETURN

'-------------------------------------------------------
```

```
reset_all:

'Uncorrect system setting
IF READ_BIT(15,diag01)=0 THEN GOSUB system_detection

'MECHATROLINK axes reset sequence
FOR i=0 TO max_axis
    BASE(i)
    IF ATYPE>=40 AND ATYPE<=42 THEN
      'Reset sequence for MECHATROLINK communication error
        IF (AXISSTATUS AND 4)<>0 THEN
            PRINT "Resetting ML alarm"
            GOSUB system_detection
        ENDIF
        'Reset sequence for DRIVE errors
        IF (AXISSTATUS AND 8)<>0 THEN
            IF VR(servo_alarm+i*2)=$81 OR
VR(servo_alarm+i*2)=$CC THEN
                GOSUB absencoder
            ELSE
    'Pending to handle diferently those alarms that cannot
    'be resetted with DRIVE_CLEAR
            DRIVE_CLEAR
            ENDIF
        ENDIF
    ENDIF
NEXT i
'Reset sequence for AXIS error
DATUM(0)
CLEAR_BIT(0,status_bits)

'MECHATROLINK devices reset sequence
IF (SYSTEM_ERROR AND $40000)<>0 THEN

'Omron Auto Generated - ML IO
'Warning: Automated code section - any manual code changes
'will be lost.

'Omron Auto Generated - ML IO End

    'Same with the other IO devices
ELSEIF SYSTEM_ERROR<>0 THEN
    'Other system error needs initialisation of the system
    EX
ENDIF


RETURN

'-------------------------------------------------------

warning_seq:

IF READ_BIT(15,diag01) THEN
    'Clear servodrive warning if any
    IF res_bit=1 THEN
        FOR i=0 TO max_axis
            BASE(i)
            IF ATYPE>=40 AND ATYPE<=42 THEN
                IF (DRIVE_STATUS AND 2)>0 THEN DRIVE_CLEAR
            ENDIF
        NEXT i
    ENDIF
ENDIF
RETURN

'-------------------------------------------------------

monitoring:

'Add monitoring depending on the application
RETURN
```

```
'-------------------------------------------------------

absencoder:
'To be implemented in the future
RETURN

'-------------------------------------------------------

system_detection:

status_word=0
action=0
VR(status_bits)=0

'Omron Auto Generated - Units
'Warning: Automated code section - any manual code changes
'will be lost.

'Unit Variables reset
VR(diag01)=0
VR(diag02)=0
VR(diag03)=0
VR(system01)=0
```

```
'Unit Detection
' ML04 Unit
IF COMMSTYPE SLOT(0) <> 36 THEN
    PRINT "Error Comms Type for unit 0 is not ML04"
    SET_BIT(0,diag03)
ENDIF

' FL Unit
IF COMMSTYPE SLOT(1) <> 33 THEN
    PRINT "Error Comms Type for unit 1 is not FL"
    SET_BIT(1,diag03)
ENDIF

'Start Mechatrolink Section

'MECHATROLINK device detection for ML04 unit 0
IF READ_BIT(0,diag03) = 0 THEN
    'Initialise Mechatrolink
    MECHATROLINK(0,0)

    ' Device count
    IF NOT MECHATROLINK(0,3,system01) THEN
        PRINT "Error getting device count for ML04 unit 0"
        SET_BIT(0,diag01)
    ELSEIF VR(system01) <> 2 THEN
        PRINT "Incorrect device count for ML04 unit 0"
        SET_BIT(1,diag01)
    ENDIF

    ' Check SJDE-02ANA-OY address
    IF NOT MECHATROLINK(0,4,0,system01) THEN
  PRINT "Error getting address for ML04 unit 0, station 0"
        SET_BIT(0,diag02)
    ELSEIF VR(system01) <> $43 THEN
    PRINT "Incorrect address for ML04 unit 0, station 0"
        SET_BIT(0,diag02)
    ENDIF

    ' Check SJDE-02ANA-OY address
    IF NOT MECHATROLINK(0,4,1,system01) THEN
  PRINT "Error getting address for ML04 unit 0, station 1"
        SET_BIT(1,diag02)
    ELSEIF VR(system01) <> $44 THEN
  PRINT "Incorrect address for ML04 unit 0, station 1"
        SET_BIT(1,diag02)
    ENDIF

ENDIF

'Stop Mechatrolink Section

'Detection OK
IF VR(diag01)=0 AND VR(diag02)=0 AND VR(diag03)=0 THEN
SET_BIT(15,diag01)

'Invert input channels
INVERT_IN(16,OFF) 'POT
INVERT_IN(17,OFF) 'NOT

'Omron Auto Generated - Units End

'Start Standard Section

IF READ_BIT(15,diag01)=1 THEN

'Drive Parameters

BASE(2)
'Parameter data param_n/param_v/mask/size
TABLE(0,$20E,32,$FFFFFF,4)
TABLE(4,$210,45,$FFFFFF,4)
TABLE(8,$515,$800,$FFF0FF,2)
TABLE(12,-1)
MECHATROLINK(0,20,$43) 'SJDE-02ANA-OY
REGIST(-1)
```

```
VR(system01)=0
i=0
res=0
WHILE TABLE(i)<>-1
    IF NOT DRIVE_READ(TABLE(i),TABLE(i+3),system01) THEN
        SET_BIT(0,diag02)
    ELSE
        IF TABLE(i+2)=$FFFFFF THEN
            IF VR(system01)<>TABLE(i+1) THEN
IF NOT DRIVE_WRITE(TABLE(i),TABLE(i+3),TABLE(i+1),1) THEN
                    SET_BIT(1,diag02)
                ELSE
                    res=1
                ENDIF
            ENDIF
        ELSE 'Parameter set using Mask
     IF (VR(system01) AND NOT TABLE(i+2))<>TABLE(i+1) THEN
  VR(system01)=(VR(system01) AND TABLE(i+2)) OR TABLE(i+1)
IF NOT DRIVE_WRITE(TABLE(i),TABLE(i+3),VR(system01),1) THEN
         SET_BIT(1,diag02)
                ELSE
                    res=1
                ENDIF
            ENDIF
        ENDIF
    ENDIF
    i=i+4
WEND
'Reset drive if necessary
IF res=1 THEN
    IF NOT DRIVE_RESET THEN SET_BIT(0,diag02)
ENDIF

BASE(3)
'Parameter data param_n/param_v/mask/size
TABLE(0,$20E,32,$FFFFFF,4)
TABLE(4,$210,45,$FFFFFF,4)
```

```
TABLE(8,$50A,$8000,$FF0FFF,2)
TABLE(12,$50B,$8,$FFFFF0,2)
TABLE(16,$515,$800,$FFF0FF,2)
TABLE(20,-1)
MECHATROLINK(0,20,$44) 'SJDE-02ANA-OY
REGIST(-1)
VR(system01)=0
i=0
res=0
WHILE TABLE(i)<>-1
    IF NOT DRIVE_READ(TABLE(i),TABLE(i+3),system01) THEN
        SET_BIT(0,diag02)
    ELSE
        IF TABLE(i+2)=$FFFFFF THEN
            IF VR(system01)<>TABLE(i+1) THEN
IF NOT DRIVE_WRITE(TABLE(i),TABLE(i+3),TABLE(i+1),1) THEN
                    SET_BIT(1,diag02)
                ELSE
                    res=1
                ENDIF
            ENDIF
        ELSE 'Parameter set using Mask
     IF (VR(system01) AND NOT TABLE(i+2))<>TABLE(i+1) THEN
  VR(system01)=(VR(system01) AND TABLE(i+2)) OR TABLE(i+1)
IF NOT DRIVE_WRITE(TABLE(i),TABLE(i+3),VR(system01),1) THEN
                    SET_BIT(1,diag02)
                ELSE
                    res=1
                ENDIF
            ENDIF
        ENDIF
    ENDIF
    i=i+4
WEND
'Reset drive if necessary
IF res=1 THEN
    IF NOT DRIVE_RESET THEN SET_BIT(0,diag02)
```

```
ENDIF

' Axis Parameters

BASE(0) 'Axis Name: Flex00
ATYPE=44 'Axis Type: Flexible_Servo
UNITS=1024.0000
REP_DIST=5000000.0000
REP_OPTION=0
ERRORMASK=268
AXIS_ENABLE=0
DRIVE_CONTROL=0
P_GAIN=1.0000
I_GAIN=0.0000
D_GAIN=0.0000
OV_GAIN=0.0000
VFF_GAIN=0.0000
SPEED=50.0000
ACCEL=100.0000
DECEL=100.0000
CREEP=100.0000
JOGSPEED=100.0000
FE_LIMIT=10.0000
SERVO=0
FWD_IN=-1.0000
REV_IN=-1.0000
DATUM_IN=-1.0000
FHOLD_IN=-1.0000
FS_LIMIT=20000000.0000
RS_LIMIT=-20000000.0000
FASTDEC=0.0000
FHSPEED=1000.0000
OUTLIMIT=1.0000
FE_RANGE=0.0000
DAC=0.0000
```

```
BASE(1) 'Axis Name: Flex01
ATYPE=44 'Axis Type: Flexible_Servo
UNITS=1024.0000
REP_DIST=5000000.0000
REP_OPTION=0
ERRORMASK=268
AXIS_ENABLE=0
DRIVE_CONTROL=0
P_GAIN=1.0000
I_GAIN=0.0000
D_GAIN=0.0000
OV_GAIN=0.0000
VFF_GAIN=0.0000
SPEED=50.0000
ACCEL=100.0000
DECEL=100.0000
CREEP=100.0000
JOGSPEED=100.0000
FE_LIMIT=10.0000
SERVO=0
FWD_IN=-1.0000
REV_IN=-1.0000
DATUM_IN=-1.0000
FHOLD_IN=-1.0000
FS_LIMIT=20000000.0000
RS_LIMIT=-20000000.0000
FASTDEC=0.0000
FHSPEED=1000.0000
OUTLIMIT=1.0000
FE_RANGE=0.0000
DAC=0.0000


BASE(2) 'Axis Name: Down
ATYPE=40 'Axis Type: Mechatro_Position
UNITS=32.0000
REP_DIST=360000.0000
```

```
REP_OPTION=0
ERRORMASK=268
AXIS_ENABLE=0
DRIVE_CONTROL=0
SPEED=3600.0000
ACCEL=36000.0000
DECEL=36000.0000
CREEP=100.0000
JOGSPEED=100.0000
FE_LIMIT=90.0000
SERVO=0
FWD_IN=16.0000
REV_IN=17.0000
DATUM_IN=-1.0000
FHOLD_IN=-1.0000
FS_LIMIT=20000000.0000
RS_LIMIT=-20000000.0000
FASTDEC=0.0000
FHSPEED=1000.0000
OUTLIMIT=1.0000
FE_RANGE=0.0000


BASE(3) 'Axis Name: Up
ATYPE=40 'Axis Type: Mechatro_Position
UNITS=32.0000
REP_DIST=360.0000
REP_OPTION=1
ERRORMASK=268
AXIS_ENABLE=0
DRIVE_CONTROL=0
SPEED=3600.0000
ACCEL=36000.0000
DECEL=36000.0000
CREEP=100.0000
JOGSPEED=100.0000
FE_LIMIT=90.0000
```

```
SERVO=0
FWD_IN=-1.0000
REV_IN=-1.0000
DATUM_IN=-1.0000
FHOLD_IN=-1.0000
FS_LIMIT=20000000.0000
RS_LIMIT=-20000000.0000
FASTDEC=0.0000
FHSPEED=1000.0000
OUTLIMIT=1.0000
FE_RANGE=0.0000

ENDIF

' Variables

' TABLE DATA

'Stop Standard Section

RETURN
```

5.2.2 Initialization program

The Initialization program sets the parameters for the axes. These parameters are dependant upon the Motor Encoder resolution and the motor maximum speed.

NOTE
Refer to the Servo Drive and the motor data sheet for this information.

```
'==============================================
'EXAMPLE OF INITIALIZATION PROGRAM
'THIS VERSION IS DESIGNED FOR MECHATROLINK-II SERVOS
'ADAPT THIS PROGRAM ACCORDING TO YOUR APPLICATION
'==============================================
BASE(x)
restart=0
inertia_ratio=set_load_inertia_ratio

'----------------------------
'EXAMPLE 1
'SGMAH-01AAA61D-OY motor data
'----------------------------
enc_resolution=2^13 '13 bit encoder
max_speed=5000 '5000 rpm max. speed

'----------------------------
'EXAMPLE 2
'SGMAH-01A1A61D-OY motor data
'----------------------------
enc_resolution=2^16 '16 bit encoder
max_speed=5000 '5000 rpm max. speed

'----------------------------
'WRITE PARAMETERS IN THE SERVO
'----------------------------
DRIVE_WRITE($103,2,inertia_ratio) 'Write inertia ratio
```

```
DRIVE_READ($110,2,10)
IF VR(10)<>$0012 THEN
    DRIVE_WRITE($110,2,$0012,1)
    'Pn110=0012h (autotuning disabled)
    restart=1
ENDIF
DRIVE_READ($202,2,10)
IF VR(10)<>1 THEN
    DRIVE_WRITE($202,2,1,1)
    'Pn202=1 (gear ratio numerator in the drive. Default is 4)
    restart=1
ENDIF
DRIVE_READ($511,2,10)
IF VR(10)<>$6548 THEN
    DRIVE_WRITE($511,2,$6548,1)
    'Pn511 set the registration inputs in the Servo Drive
    restart=1
ENDIF
DRIVE_READ($81E,2,10)
IF VR(10)<>$4321 THEN
    DRIVE_WRITE($81E,2,$4321,1)
    'Pn81E=$4321 To make the Digital inputs in the Servo Drive
    'available for reading through DRIVE_INPUTS word
    restart=1
ENDIF
IF restart=1 THEN DRIVE_RESET

'----------------------------
'Initial gains For MECHATROLINK_SPEED
'----------------------------
'By experience this setting is a good starting point
P_GAIN=INT(214748.3648*max_speed/enc_resolution)
'This is the optimum value. Set if needed
VFF_GAIN=INT(60000*1073741824/enc_resolution/max_speed)

'----------------------------
'Initial gains For MECHATROLINK_POSITION mode
'----------------------------
'Change the rigidity (Fn001) according to the 'mechanical
system
'Change feedforward gain Pn109 if required

'----------------------------
'Initial parameter of the AXIS
'----------------------------
'If set to 1 (and Pn202=Pn203=1) the UNITS are 'encoder counts
UNITS=1
'Theoretical FE we will have running the motor at "max_speed"
'without VFF_GAIN in MECHATROLINK SPEED
FE_LIMIT=1073741824/P_GAIN/UNITS
'SPEED is set to 1/3 of "max_speed
SPEED=(max_speed73)*enc_resolution/60/UNITS
'ACCEL in 200ms from 0 to "max_speed"
ACCEL=SPEED/0.2
'DECEL in 200ms from "max_speed" to 0
DECEL=SPEED/0.2
```

5.2.3 Single axis program

This program is a simple program to run one axis only.

fig. 48

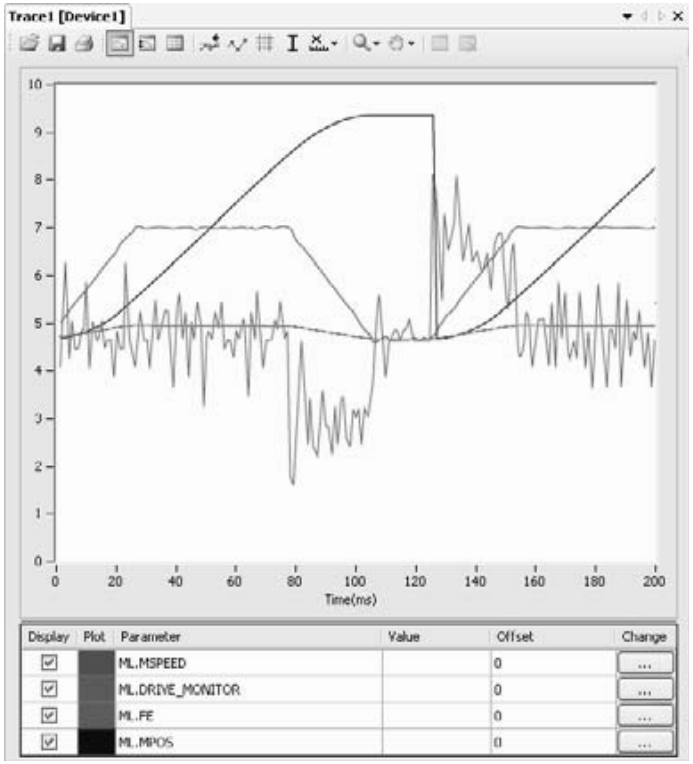

Example

```
'GOSUB homing
BASE(0)
DEFPOS(0)
WA(100)
loop:
    MOVE(1440)
    WAIT IDLE
    WA(100)
GOTO loop
```

The units are degrees in this example, therefore:

- 13-bit encoder
- Pn202=32
- Pn203=45
- **UNITS=32**

The graph in the figure is typical for this point-to-point movement with linear acceleration). Note the following:

- During linear acceleration, the graph of the position is parabolic (because the speed is a derivative of the position).
- During constant speed, the graph of the position is straight.
- During linear deceleration, the graph of the position is counter-parabolic.
- During stop, the graph of the position is constant.
- When an overflow occurs (**MPOS>=REP_DIST**), the position jumps to 0 if **REP_OPTION=1** or to **-REP_DIST** if **REP_OPTION=0**.

- The Following Error is proportional to the speed if you use only Proportional Gain in the position loop.
- The torque, which is given by **DRIVE_MONITOR** as a percentage of the nominal torque of the motor when you set **DRIVE_CONTROL=11**) is proportional to the acceleration according to the formula:

  $Torque_{total} = J_{total} \times \alpha + Torque_{friction}$

  where $Torque_{friction}$ is usually small, α is the angular acceleration, and J the inertia of the system.

5.2.4 Position with product detection

A ballscrew moves forward at a creep speed until it reaches a product, a microswitch (IN(2)) turns on.
The ballscrew is stopped immediately, the position at which the product is sensed is indicated and the ballscrew returns at a rapid speed back to the start position.

fig. 49

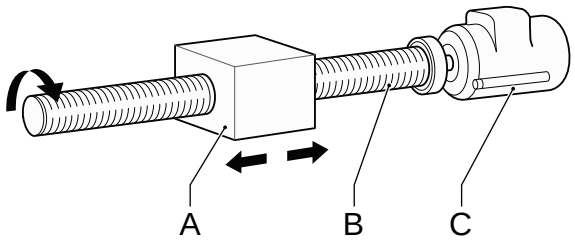

Example

```
start:
    WAIT UNTIL IN(1)=ON
    SPEED=10
    FORWARD
    WAIT UNTIL IN(2)=ON
    prod_pos=MPOS
    CANCEL
    WAIT IDLE
    PRINT "Product Position : "; prod_pos
    SPEED=100
    MOVEABS(0)
    WAIT IDLE
GOTO start
```

fig. 50

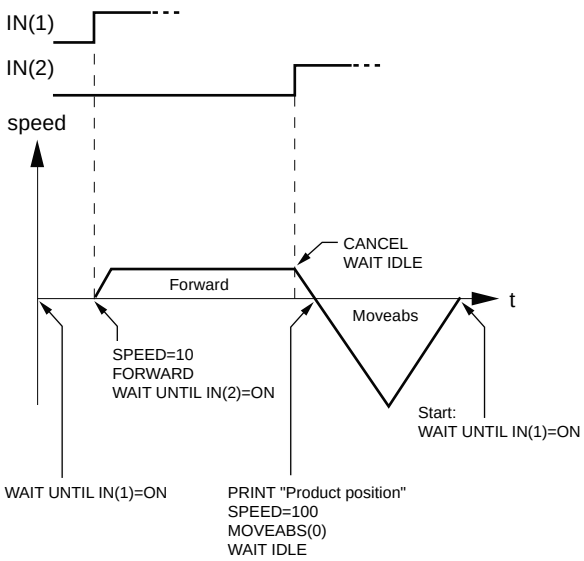

5.2.5 Position on a grid

A square palette has sides 1m long. It is divided into a 5 x 5 grid, and each of the positions on the grid contains a box which must be filled using the same square pattern of 100mm by 100mm. A dispensing nozzle controlled by digital output 8 must be turned on when filling the box and off at all other times.

fig. 51

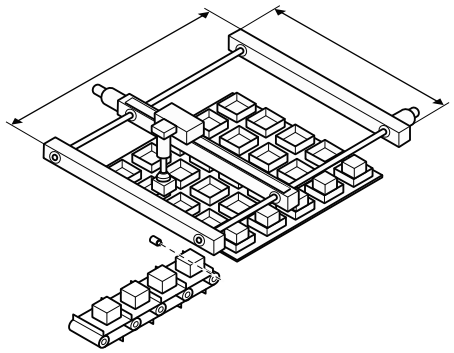

Example

```
nozzle = 8
start:
    FOR x = 0 TO 4
        FOR y = 0 TO 4
            MOVEABS(x*200, y*200)
            WAIT IDLE
            OP(nozzle, ON)
            GOSUB square_rel
            OP(nozzle, OFF)
        NEXT y
    NEXT x
GOTO start
square_rel:
    MOVE(0, 100)
    MOVE(100, 0)
    MOVE(0, -100)
    MOVE(-100,0)
    WAIT IDLE
    WA(1000)
RETURN
```

fig. 52

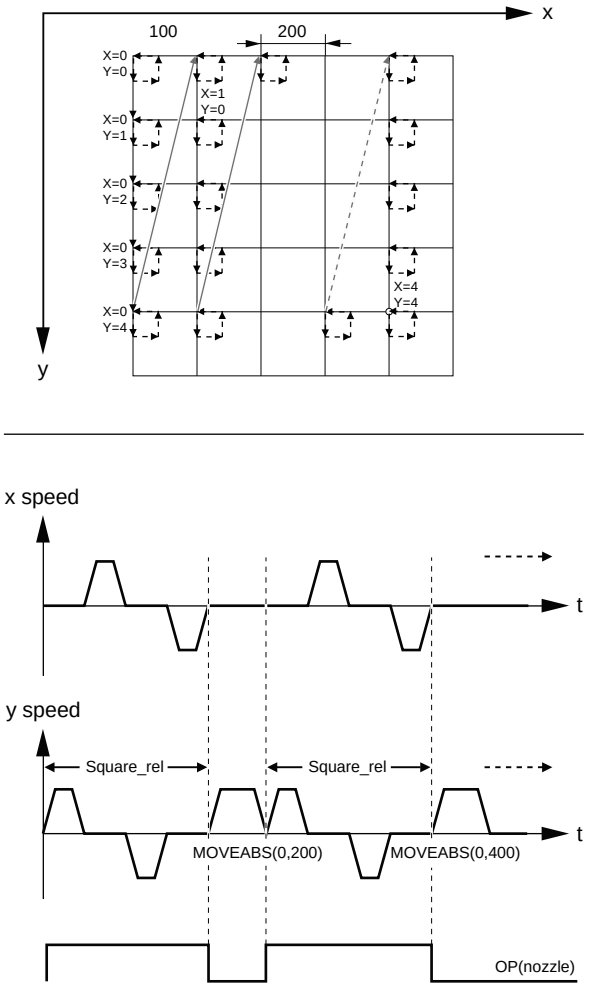

5.2.6 Bag feeder program

A bag feeder machine feeds plastic film a fixed distance that is set by the operator. The figure shows a typical bag feeder that is part of the machine.

fig. 53

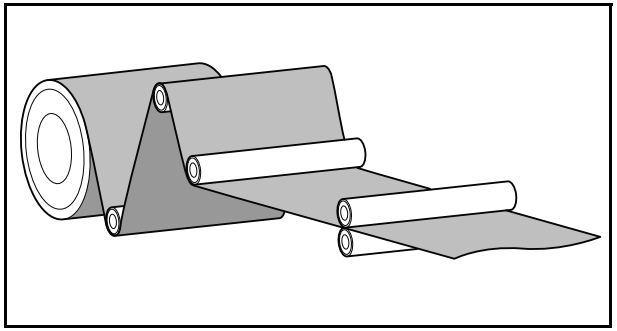

Bag feeder machines have two modes.

- Without mark: Forward feeds the film a set distance, for films of a flat colour
- With mark: Forward feeds the film to a printed mark on the film.

The program in this section shows the typical code for a bag feeder machine.

Example

```
'==================================================
'BAG FEEDER program
'==================================================
'Working with marks, if any mark is missing, feed the
'theoretical distance. But if the mark is missing for
'a number of consecutive bags, stop the operation.
'A digital output is activated a certain time to cut
'the bag.
'==================================================

'Variable initialisation
start_signal=7
max_fail=3
program_alarm=0
failed=0
feeder_axis=2
BASE(feeder_axis)
'Position counter (MPOS,DPOS) goes from 0 to 999999
'and 0 again
UNITS=27
SPEED=100
ACCEL=1000
DECEL=1000
REP_DIST=1000000
REP_OPTION=1
SERVO=ON
WDOG=ON
```

fig. 54

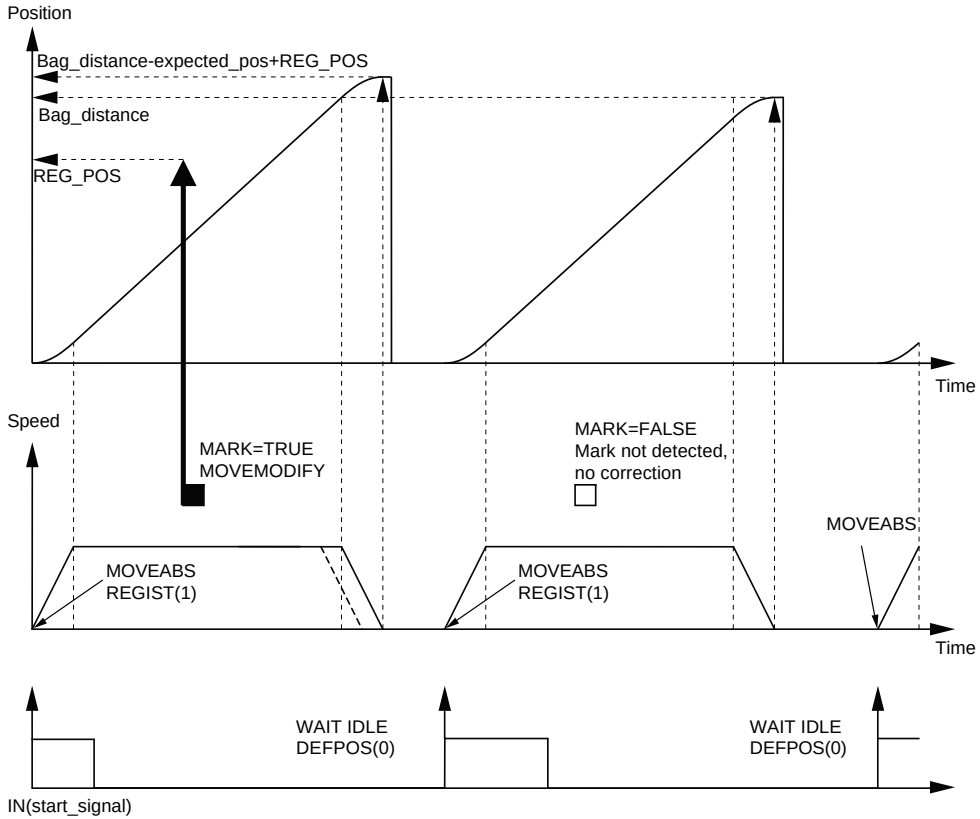

```
'Main program
loop:
    'Define current position
as zero
    DEFPOS(0)

    'Wait for rising edge in
Digital Input
    '"start_signal"
    WAIT UNTIL
IN(start_signal)=0
    WAIT UNTIL
IN(start_signal)=1

    'Move bag length
    MOVEABS(bag_distance)
    WAIT UNTIL MTYPE=2 'To
verify that the MOVEABS is
being executed

    'If we work with Mark,
activate the trigger
    'MARK=FALSE when
triggered and TRUE when not
triggered
    IF work_with_mark AND
MARK THEN
        REGIST(1)
        WAIT UNTIL MARK=0
    ENDIF

    'Wait until movement
finished or mark detected
    WAIT UNTIL MTYPE=0 OR
(MARK AND work_with_mark)

    'Working with mark
    IF work_with_mark THEN
        IF MARK THEN 'If the
mark has been detected, the
position is corrected

MOVEMODIFY(bag_distance-
expected_pos+REG_POS)
            failed=0

        ELSE 'If the mark has
not been detected
            PRINT "Mark not
detected"
            failed=failed+1
           IF failed>max_fail
THEN 'After several
consecutive misdetection stop
the application
                PRINT "Mark
definitelly lost"

program_alarm=3
                STOP
            ENDIF
        ENDIF
    ENDIF

    'Wait until the feed
movement has finished
    WAIT IDLE
GOTO loop
```

5.2.7 CAM table inside a program

It shows how to create a CAM table inside a program, and use the **CAMBOX** motion command.
The profile used is the COS square one. This is a quite typical profile for feeder-type applications as:

- The motion provides a smooth acceleration without sudden acceleration changes, so the material slip is minimized
- It gives a fast deceleration so the cycle time is reduced. During deceleration there is no material slip and the friction helps to the stop to zero.

Example

```
start:
    GOSUB filltable
    WDOG=1 'Set servos to RUN
    BASE(1)
    SERVO=1 'Enable position
loop in axis 1
    BASE(0)
    SERVO=1 'Enable position
loop in axis 0
    'The position counter
counts from 0 to 11999
    'and then back to 0 again
    REP_OPTION=1
    REP_DIST=12000
    SPEED=200
    FORWARD

BASE(1)
loop:

CAMBOX(in_tbl,end_tbl,1,lnk_d
st,master,opt,start)
    WAIT IDLE
GOTO loop

filltable:
    'The shape of the CAM is
stored in TABLE(0) to
    'TABLE(360)
    npoints=360
    in_tbl=0
    end_tbl=in_tbl+npoints
   'Distance of the master to
make the CAM
    lnk_dst=10000
    'Master axis
    master=0
    'The CAM start exactly
when the master reaches
    'position "start"
    opt=2
    start=1000

    k=100
    'Fill the TABLE with the
suitable waveform
    FOR i= in_tbl TO end_tbl
        TABLE(i,(k*(COS(PI*i/
npoints)-1))^2)
    NEXT i
RETURN
```

fig. 55

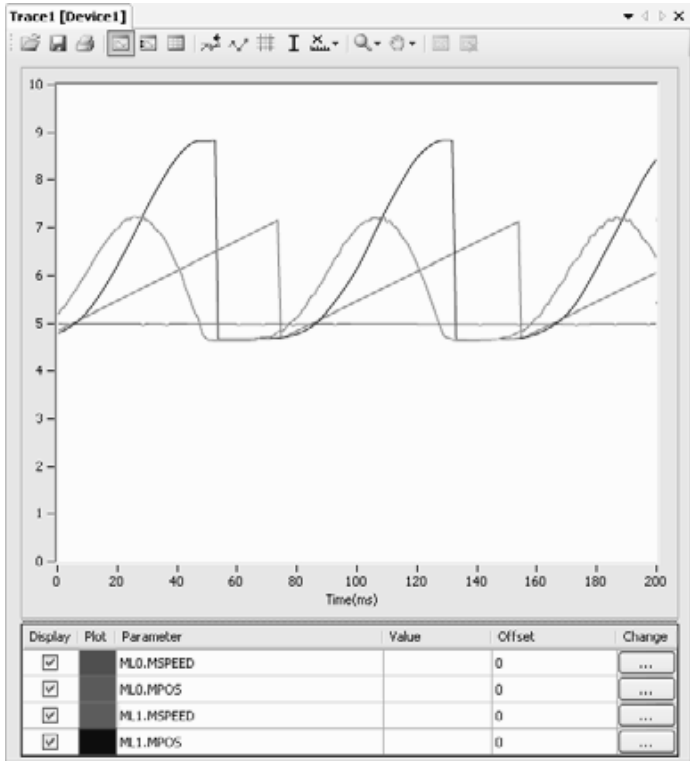

5.2.8 Flying shear program

An example of the Flying shear program. In this application there are three axes:

- Axis 0, shear_axis, the advancement of the shear.
- Axis 1, flying_axis, is the flying shear.
- Axis 2, line_axis, transports the material.

fig. 56

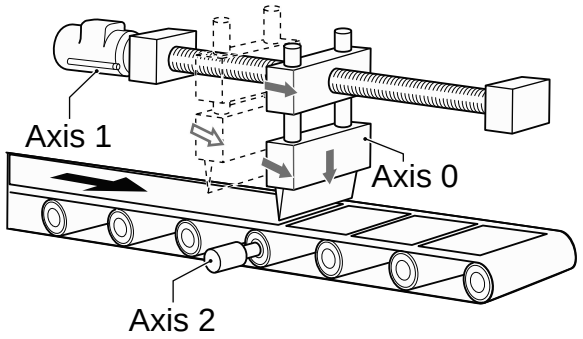

Example

```
'============================
=====================
'FLYING SHEAR program
'============================
=====================
'Typical example of a flying
shear application.
'One axis (line_axis)
transport the material
'Second axis (flying_axis) is
the flying shear itself
'Third axis (shear_axis) is
the shear advancement
'The distance in
synchronization must be long
enough
'to allow the cut at maximum
speed.
'The return of the flying
shear is done at such a speed
'that the wait time is zero
(optimization of the
movement).
'Again it is assumed that
everithing has been
calculated
'to not exceed the maximum
motor speed at maximum line
speed
'============================
=====================
cut_counter=0
line_axis=2
shear_axis=0
flying_axis=1
```

```
SERVO AXIS(line_axis)=ON
SERVO AXIS(flying_axis)=ON
SERVO AXIS(shear_axis)=ON
WDOG=ON

'FIRST CYCLE

'Make a first material cut
MOVEABS(end_pos)
AXIS(shear_axis)
WAIT UNTIL MTYPE
AXIS(shear_axis)=2
WAIT IDLE AXIS(shear_axis)

'First time we have a certain
wait time because the
'material has been just been
cut
wait_distance=cut_lenght-
l_acc/2
MOVELINK(0,wait_distance,0,0,
line_axis) AXIS(flying_axis)
WAIT UNTIL MTYPE
AXIS(flying_axis)=22
'We start the line
FORWARD AXIS(line_axis)

loop:

    'Update the line speed
every cycle
    SPEED
AXIS(line_axis)=line_speed

    'Cutting movement at
synchronized speed
```

fig. 57

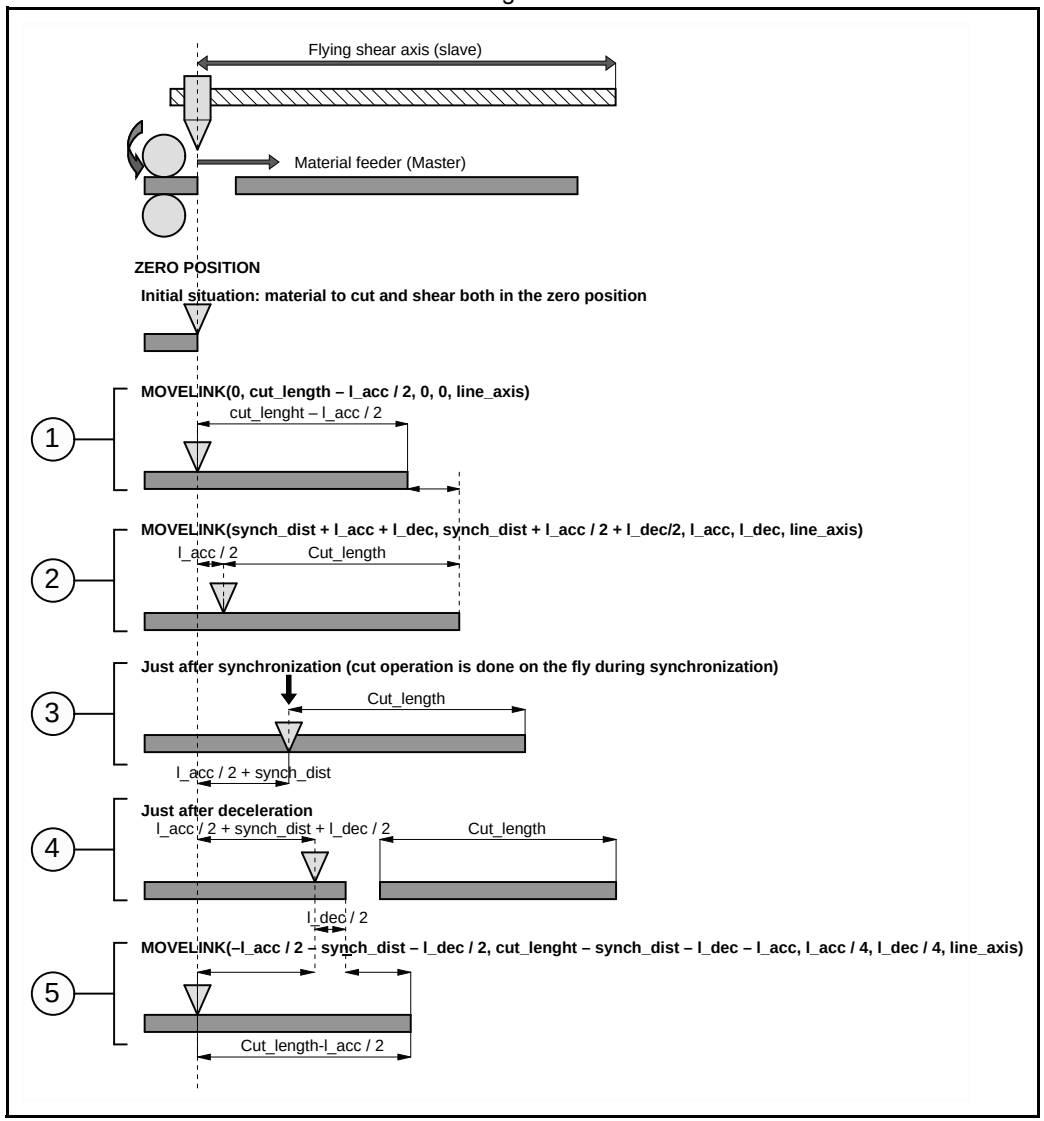

```
line_cut=synch_dist+l_acc+l_d
ec

shear_cut=synch_dist+l_acc/
2+l_dec/2

MOVELINK(shear_cut,line_cut,l
_acc,l_dec,line_axis)
AXIS(flying_axis)
    WAIT UNTIL MPOS
AXIS(flying_axis)>l_acc/2

    'Activate the shear when
it is in synchronization with
the line
    'Slow speed to cut
    SPEED
AXIS(shear_axis)=cut_speed
    MOVEABS(end_pos)
AXIS(shear_axis)
    MOVEABS(0)
AXIS(shear_axis)
    WAIT UNTIL NTYPE
AXIS(shear_axis)=2
    'Fast speed to return
    WAIT LOADED
AXIS(shear_axis)
    SPEED
AXIS(shear_axis)=return_speed


cut_counter=cut_counter+1inch

    'Return back synchronized
with the master in such a way
    'that there is no wait
time
    line_back=cut_length-
synch_dist-l_dec-l_acc
    shear_cut=l_acc/
2+synch_dist+l_dec/2)
    MOVELINK(-
shear_cut,line_back,l_acc/
4,l_dec/4,line_axis)
AXIS(flying_axis)

GOTO loop
```

The speed-time graph shows the steps of the above example. The steps are:

1. The initial cycle: the slave waits for the right length in the product to cut (cut_length – distance_to_accelerate / 2). It is necessary to divide distance_to_accelerate when we use the **MOVELINK** command, because when we synchronize, the master moves twice the distance of the slave.
2. The slave accelerates to synchronize with the master. When the acceleration finishes, the relative distance between the edge of the product and the shear is cut_length.
3. This is the synchronization part: the relative distance between the edge of the product and the shear remains the same. The cut in the material is made. This gives a new material edge.
4. The deceleration part: the material continues, and the shear stops.
5. Move back at high speed: the distances are calculated such that when the slave reaches it original position, the edge of the product is in the correct position to start a new cut.A

A new movement starts (step 2).

fig. 58

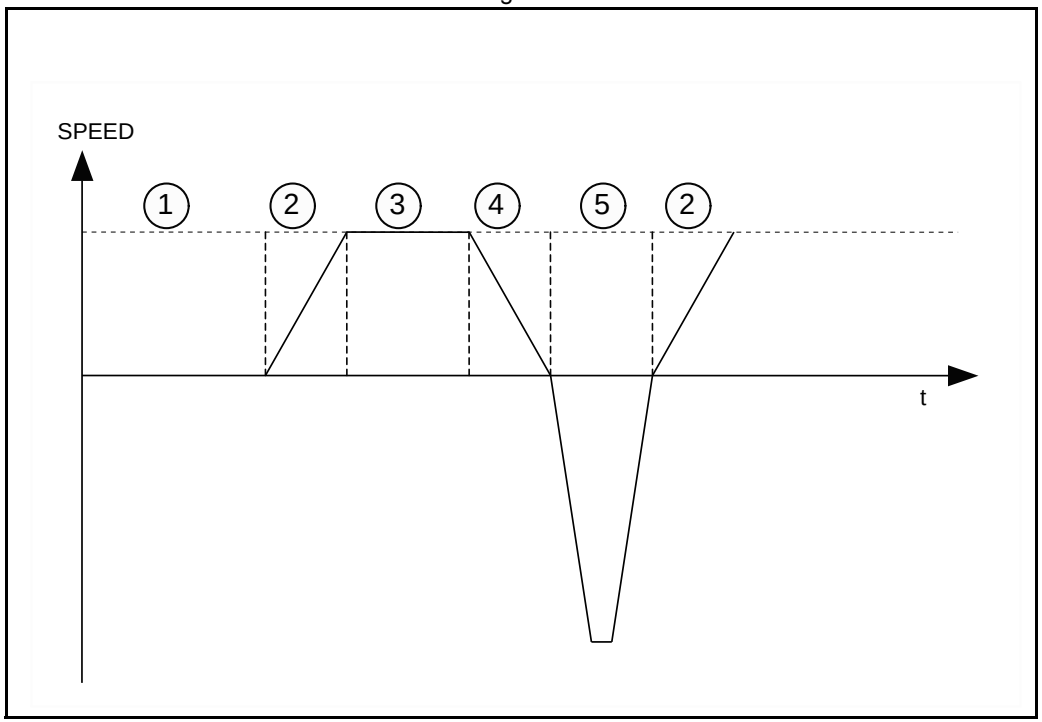

5.2.9 Correction program

This application is for a rotary labeller. The constants are:

- The product arrives on a conveyor (master axis) that runs at a constant speed.
- A rotary labeller that is synchronized 1:1 to the conveyor, attaches the labels.
- The distance between products is fixed and mechanically guaranteed.

The distance between labels is never exactly constant so, a correction is needed. This is done by superimposing a virtual axis onto the movement of the labeller.
The difference between the expected position and the actual position is measured with a photocell. This is the correction factor.
Every time a correction is made, the origin position is updated accordingly.

Example

```
conveyor=0
labeller=1
virtual=15
SERVO AXIS(conveyor)=1
SERVO AXIS(labeller)=1
WDOG=1

BASE(labeller)
CONNECT(1,conveyor)
ADDAX(virtual)
FORWARD AXIS(conveyor)
REGIST(1)
WAIT UNTIL MARK=0

loop:
    WAIT UNTIL MARK

correction=REG_POS+expected_p
os
    MOVE(correction)
AXIS(virtual)
    WAIT IDLE AXIS(virtual)
    OFFPOS=-
label_length+correction
    REGIST(1)
    WAIT UNTIL MARK=0
GOTO loop
```

fig. 59

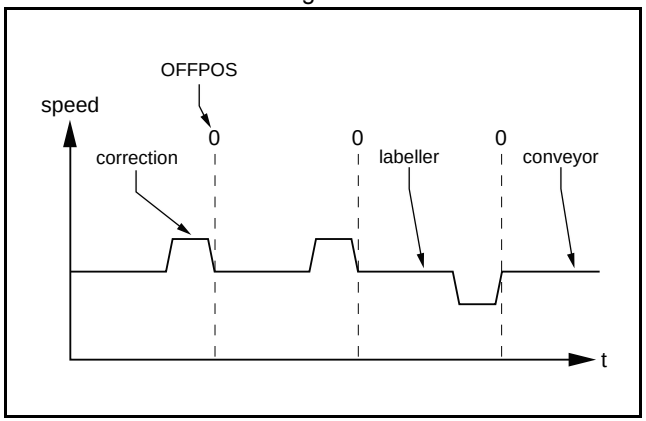

6 Troubleshooting

6.1 Voltage and analysis tools

Check the voltage to the power supply input terminals. Make sure the voltage is within the specified range. If the voltage is outside the specified range, the system can operate incorrectly.

To diagnose errors for the TJ2-MC__ and the TJ1-ML__ and to troubleshoot these units, use the Trajexia Studio software tool.
To diagnose errors for the TJ1-PRT and to troubleshoot this unit, use a PROFIBUS configurator and monitoring tool (for example, **OMRON CX-PROFIBUS**).

CAUTION
Disconnect all cables before you check if they have burned out. Even if you have checked the conduction of the wiring, there is a risk of conduction due to the return circuit.

CAUTION
If the encoder signal is lost, the servo motor can run away, or an error can be generated. Make sure that you disconnect the motor from the mechanical system before you check the encoder signal.

CAUTION
When you troubleshoot, make sure that nobody is inside the machine facilities and that the facilities are not damaged even if the servo motor runs away. Check that you can immediately stop the machine using an emergency stop when the motor runs away.

6.2 TJ2-MC__

6.2.1 System errors

System errors show on the LED display of the TJ2-MC__ as **Enn**, where **nn** is the error code.

Error code	Description	Cause	Solution
E00	BASIC SRAM error	Hardware failure of the TJ2-MC__.	Replace the TJ2-MC__.
E01	System SRAM low word error	Hardware failure of the TJ2-MC__.	Replace the TJ2-MC__.
E02	System SRAM high word error	Hardware failure of the TJ2-MC__.	Replace the TJ2-MC__.
E03	Battery low error[1]	The battery voltage is too low.	Replace the battery.
...	Hardware failure	Hardware failure of the TJ2-MC__.	Replace the TJ2-MC__.

1. Trajexia can work normally without a battery connected, only storage in RAM is not possible.

NOTE
Please refer to section 3.2.309 for more information.

6.2.2 Axis errors

Axis errors show on the LED display of the TJ2-MC__ as **Ann**.

Error code	Description	Cause	Solution
Ann	Axis error on axis nn	Incorrect or out of range value of axis parameter set	See below
		Error or alarm on Servo Drive assigned to the axis	See below

Incorrect or out of range axis parameter value

If the value of an axis parameter is incorrect or out of range an axis error occurs. No alarm or error shows on the display of the Servo Drive assigned to the axis.
You can see the cause of the error with the **AXISSTATUS** command. In the Trajexia Studio terminal window, type **PRINT AXISSTATUS AXIS(nn)**, where **nn** is the axis number. The return value of the **AXISSTATUS** command contains the axis error code. See the **AXISSTATUS** command.
You can also open the **Axis Parameter** window in Trajexia Studio and check the **AXISSTATUS** field of the axis that caused the error. The bits that indicate the cause of the error show in big red letters. To remove the error, do these steps:

1. Correct the value.
2. Reset the controller, or click the **Axis status error** button.

Error or alarm on Servo Drive assigned to the axis

If an error or an alarm on the Servo Drive assigned to the axis causes an axis error, the drive alarm shows on the LED display of the drive. You can also open the Axis Parameter window in Trajexia Studio and check the **AXISSTATUS** field of the axis that caused the error. The return value of the **AXISSTATUS** command has the second bit (bit **a**: Servo Drive communication error) and/or the third bit (bit **m**: Servo Drive alarm) show in big red letters.
To remove the error, do these steps:

1. Refer to the Servo Drive manual to determine the cause of the error, and solve the error.
2. Reset the controller, or click the **Axis status error** button in the Axis Configuration window, Monitoring tab..

6.2.3 Unit errors

Unit errors show on the LED display of the TJ2-MC__ as **Unn**.

Error code	Description	Cause	Solution
Unn	Unit error on unit nn	Defective unit	See below
		Unit not connected to the Trajexia bus	See below
		An I/O unit or an Inverter on a MECHATROLINK-II unit is lost or disconnected	See below
		TJ1-ML__ version not supported	See below
U07	Unit error on unit 7	No terminator	See below
		Too many units connected to the TJ2-MC__	See below

Defective unit

The error code **U0n** shows on the display, where **n** ranges from 0 to 6 and is the number of the unit that causes the error.
To solve the problem, replace the defective unit.

Unit not connected to the Trajexia bus

The error code **U0n** shows on the display, where **n** ranges from 0 to 6 and is the number of the unit that causes the error.
To solve the problem, check the bus connector of the unit.

I/O unit or Inverter on a MECHATROLINK-II unit is lost or disconnected

The error code **U0n** shows on the display, where **n** is the number of the TJ1-ML__ to which the MECHATROLINK-II unit that causes the error is connected.

You can set system flags to enable and disable these errors. The errors are enabled by default.
To disable the errors, type **COORDINATOR_DATA(7,1)** in the Trajexia Studio terminal window.

To enable the errors, type **COORDINATOR_DATA(7,0)** in the Trajexia Studio terminal window.

To see the current setting, type **PRINT COORDINATOR_DATA(7)** in the Trajexia Studio terminal window.

To clear the error after repair do these steps:

- Reconnect the lost MECHATROLINK-II I/O unit or Inverter.
- Type **MECHATROLINK(n, 5, station, -1)** in the Trajexia Studio terminal window:
  where **n** is the number of the TJ1-ML__ to which the MECHATROLINK-II unit affected, and **station** is the MECHATROLINK-II device number that is lost.

If you want to use the system without the lost device, you can reconnect all available devices on the TJ1-ML__. To do this, type **MECHATROLINK(n, 0)** in the Trajexia Studio terminal window, where **n** is the number of the TJ1-ML__ that reports the error.

TJ1-ML__ version not supported

TJ2-MC__ requires TJ1-ML__ units with a minimum FPGA version 18. The FPGA version can be checked by typing **PRINT FPGA_VERSION SLOT(x)** in the Trajexia Studio terminal window. Replace x with the position of the TJ1-ML__ unit, starting from 0.

No terminator

The error code **U07** shows on the display.
To solve the problem, check the terminator connection or replace the terminator if it is defective.

Too many units connected

The error code **U07** shows on the display.
To solve the problem, check the number of connected units. No more than 7 units are supported.

6.2.4 Configuration errors

Configuration errors show on the LED display of the TJ2-MC__ as **Cnn**.

Error code	Description	Cause	Solution
Cnn	Configuration error caused by unit nn	The system has too many units of the same type, and it does not adhere to the rules for adding units to a system	Change the system so that it adheres to the rules for adding units to a system. See the Hardware Reference manual.
		You have connected too many MECHATROLINK-II stations to the TJ1-ML__	
		There are too many axes in the system	
		There are too many non-axis MECHATROLINK-II stations in the system	
		AXIS_OFFSET is non-zero for a unit not supporting axes (e.g. TJ1-PRT)	Change **AXIS_OFFSET** to 0 for this unit.
		SERVO_PERIOD is not set to 500 in combination with TJ2-KS02 and at least one connected Servo Drive.	Change the **SERVO_PERIOD** to 500.

6.2.5 Replace the battery

To replace the backup battery, do these steps:
1. Make sure the Power Supply Unit is set to on for at least five minutes. If not, the capacitor that backs up the memory of the TJ2-MC__ while the battery is not connected is not fully charged, and you can lose data in memory.
2. Pull the top of the lid of the battery compartment away from the unit to open the battery compartment.
3. Pull the red and white wires to pull out the old battery.

4. Make sure you complete the next 2 steps within 30 seconds to prevent data loss in the RAM memory.
5. Disconnect the wires from the old battery.
6. Attach the wires to the new battery.
7. Insert the new battery into the battery compartment.
8. Close the lid of the battery compartment.

6.3 TJ1-PRT

6.3.1 System errors

Indication	Problem	Solution
No LEDs are on or flashing	The power is off.	Turn the power on.
	The TJ1-PRT is defective.	Replace the TJ1-PRT.
ERH LED is on	Communication failure between TJ2-MC__ and TJ1-PRT.	Reset the TJ2-MC__. If this does not help, replace the TJ2-MC__.
ERC LED is on	Unit error. The TJ1-PRT is defective.	Replace the TJ1-PRT.

6.3.2 I/O data communication problems

Indication	Problem	Solution
COMM LED is off and BF LED is on	The PROFIBUS configuration is incorrect, there is no communication with the master.	• Check that the TJ1-PRT has the same station address as in the configuration of the master. • Check that no station address is used twice.
	The PROFIBUS wiring is not correct.	• Check that the correct pins of the CN1 connector are connected. • Check that there are no short circuits or line interruption. • Check that you use the correct cable type. • Check that the stub lines are not too long.
	You have not properly terminated the PROFIBUS network.	Terminate the PROFIBUS network at the appropriate places.
	The PROFIBUS master unit is defective.	Replace the master unit.
	The TJ1-PRT is defective.	Replace the TJ1-PRT.
COMM LED is off and BF LED is flashing	The PROFIBUS configuration is incorrect, there is no communication with the master.	• Check that you use the correct GSD file in the master. • Check the configuration and the parameter data of the slave. • Check that the network has been configured to communicate at the baud rate supported by the TJ1-PRT.
	You have not selected configuration data for the slave.	Check the configuration at the master.
	The TJ1-PRT is defective.	Replace the TJ1-PRT.

6.4 TJ1-DRT

6.4.1 System errors

Indication	Problem	Solution
No LEDs are on or flashing	The power is off.	Turn the power on.
	The TJ1-DRT is defective.	Replace the TJ1-DRT.
ERH LED is on	Communication failure between TJ2-MC__ and TJ1-DRT.	Reset the TJ2-MC__. If this does not help, replace the TJ2-MC__.
ERC LED is on	Unit error. The TJ1-DRT is defective.	Replace the TJ1-DRT.

6.4.2 I/O data communication problems

Indication	Problem	Solution
NOK is flashing and NF LED is off	The DeviceNet master is not communicating with the TJ1-DRT.	• Configure and start the DeviceNet master.
NOK off and NF LED is on	The node address duplication error.	• Check node address.
	Network cable error.	• Check network cables.

6.5 TJ1-CORT

6.5.1 System errors

Indication	Problem	Solution
No LEDs are on or flashing	The power is off.	Turn the power on.
	The TJ1-CORT is defective.	Replace the TJ1-CORT.
ERH LED is on	Communication failure between TJ2-MC__ CPU and TJ1-CORT.	Reset the TJ2-MC__ CPU. If this does not help, replace the CPU.
ERC LED is on	Unit error. The TJ1-CORT is defective.	Replace the TJ1-CORT.

6.5.2 I/O data communication problems

Indication	Problem	Solution
NWST is off	A start-up error or fatal error occurred.	Restart the unit. If the problem persists, replace the TJ1-CORT.
BF flashing	Invalid configuration.	Check downloaded configuration. If necessary re-download it.
BF flashing single flash	Error counter warning limit reached. Possible causes: • No other nodes on the network. • Network termination incorrect. • Network cables installed incorrect.	Check the network cabling and network nodes.
BF flashing double flash	A heartbeat event occurred. An expected heartbeat message from another node was not received within the timeout interval.	Check the node, which was expected to send the heartbeat message.

Indication	Problem	Solution
BF is ON	The unit is in Bus OFF state Possible cause: Network cable short-circuit.	Check the network cabling.

6.6 TJ1-ML__

6.6.1 System errors

Indication	Problem	Solution
All LEDs are off	The power is off.	Turn the power on.
	The TJ1-ML__ is defective.	Replace the TJ1-ML__.

6.6.2 Bus errors

Indication	Problem	Solution
BF LED is on	Cable failure on the MECHATROLINK-II bus.	Check MECHATROLINK-II cables between stations connected to the unit for interruptions and irregularities (short circuit between communication lines A and B, short circuit of any communication line with shielding).
	MECHATROLINK-II bus terminator is missing or damaged.	Fit a MECHATROLINK-II bus terminator on the last station in the chain or replace it.
	The MECHATROLINK-II station connected to the unit is lost due to power off or MECHATROLINK-II interface failure at the station.	Check the power and MECHATROLINK-II interface of the station that caused the problem. Replace the station if necessary.
	The TJ1-ML__ is defective.	Replace the TJ1-ML__.

NOTE
After removing the cause of an error, make sure to re-initialise the MECHATROLINK-II bus on the unit on which the error appeared.

6.7 GRT1-ML2

Some analog I/O Units initialize slower after power on than others. If such an I/O Unit reports its correct status too late to the GRT1-ML2, the status word of the GRT1-ML2 has bit 13 set, which means that there is an error or a warning in the SmartSlice system. The default value of the error mask is set to detect if this bit is on, and thus an error is detected and reported by the TJ2-MC__. After a short time, the I/O Unit reports its (real) correct status and the status word becomes 8000 hex, but the MC__ has already detected the error, even though there was no real error. Masking this particular bit of the status word with the command **MECHATROLINK(unit,37,station,value)** is not an option, because no command can be sent before the start-up sequence, during which the error is detected, is complete.
The solution to the problem is to use the command

MECHATROLINK(unit,5,station,vr)

where:
- **unit** is the number of the MECHATROLINK-II Master Unit in the Motion Controller system.
- **station** is the station address of the GRT1-ML2 unit set with the rotary switches.
- **vr** is the VR memory address where the read code is put. Use value -1 to print the status word to the Command Line Terminal interface.

This command clears the error of the unit, and enables turning on the WDOG.
If this error and the problem of I/O Units that initialize slower occur, put the command **MECHATROLINK(unit,5,station,vr)** in the start-up program.

6.7.1 Unit power supply errors

The UNIT PWR LED shows if the power supply to the GRT1-ML2 and to the SmartSlice I/O system is enough to start-up and operate correctly.

UNIT PWR	Probable cause	Correction
Not lit	No power supply or not enough power supply to the units[1]	• Check whether power is supplied to the unit power supply terminal • Check that the supplied power is in the required range, that is 24 VDC +10% –15% (20.4 to 26.4 VDC)
Flashing	The unit power supply capacity is insufficient	Check the power supply requirement of the entire SmartSlice I/O System and replace the power supply with one that has enough capacity
Lit	No error, the correct power is supplied to the system	

1. The GRT1-ML2 can start with less power than specified. In this case, the UNIT PWR LED can be off, although other LEDs can indicate normal operation. However, in this case the correct operation of the whole SmartSlice I/O system is not guaranteed.

6.7.2 I/O power supply errors

The I/O PWR LED shows if the power supply to the external I/O connected to the SmartSlice I/O Units is enough to drive the external outputs on the individual units.

I/O PWR	Probable cause	Correction
Not lit	No power or not enough power supply to the external I/O of the SmartSlice I/O Units	• Check whether power is supplied to the I/O power supply terminal • Check that the supplied power is in the required range, that is 24 VDC +10% –15% (20.4 to 26.4 VDC)
Lit	No I/O power error, the correct power is supplied to the external I/O system	

6.7.3 Unit errors

The GRT1-ML2 starts the initialization when the power is turned on. During the initialization, the RUN LED and the ALARM LED are off. When the initialization completes, the RUN LED goes on.
Possible errors during the initialization are in the table below.

RUN	ALARM	Probable cause	Correction
Not Lit	Not lit	Initialization in progress	N/A
	Flashing	Fatal system error during initialization	Replace the unit
	Lit	Fatal error during operation	Restart the unit. If the problem persists, replace the unit.
Lit	Not Lit	No error	N/A
	Lit	One of these MECHATROLINK-II protocol violations: • Parameter out of range • Communication lost	• Restart the TJ2-MC__ • Execute the command **MECHATROLINK(unit,0)**

6.7.4 SmartSlice I/O errors

TS	Color	Probable cause	Correction
Not Lit	N/A	No power supply	Refer to section 6.7.1
Flashing (every second)	Green	Adding SmartSlice I/O Units to the network	Wait until the SmartSlice I/O Units are added to the network
		There can be a break in the connection between individual slices, or one of the SmartSlice sockets is not connected properly to its left neighboring connector. The TS LED on all correctly connected slices are flashing, but the TS LED on the not correctly connected units are off.	Check the connection between slices at the point where the first unit is located with its TS LED off. Make sure that all slices are connected correctly to each other.
		The last unit is not or not properly connected. The SmartSlice communication does not start up. The TS LED on all SmartSlice I/O Units are flashing.	Check the connection of the last unit and make sure that it is correctly connected to the SmartSlice system
	Red	SmartSlice bus communication error	Make sure that the base block of the SmartSlice I/O System is connected properly
		When the registration table function is enabled, the actual configuration does not match the registered configuration	Correct the configuration and turn the power on again
		The total number of I/O points in the SmartSlice I/O systems is greater than the maximum	Correct the unit configuration and number of I/O points and turn the power on again
Flashing (every 0.5 seconds)	Green	Restore operation in progress	Wait until the restore operation is complete
		Backup operation in progress	Wait until the backup operation is complete
Lit	Red	Backup operation failed[1]	Do the backup of the data again
		Restore operation failed	Reinstall the unit in which the restore operation was in progress and turn the power on again
		SmartSlice I/O Unit configuration error	Check these items: • Are more than 64 I/O units connected? • Are more than 128 bytes of I/O data used? • Has the I/O configuration changed since the I/O configuration table was registered?
	Green	The Slice bus operates normally	N/A

1. The TS LED is lit for 2 seconds.

6.7.5 MECHATROLINK-II initialization errors

If the GRT1-ML2 configuration contains non-supported SmartSlice I/O Units or SmartSlice I/O Units configured to consume a non-standard amount of I/O data, the MECHATROLINK-II connection to the GRT1-ML2 is refused. If an attempt to connect to the unit is made with the command **MECHATROLINK(unit, 0)**, the controller responds with the following message in the terminal interface window:

```
INVALID MECHATROLINK MASTER CONFIG FOR SERVO PERIOD:
    INVALID SLICE CONFIGURATION
```

No input or output of the SmartSlice I/O Units connected is mapped into the Trajexia I/O space.

6.8 TJ1-FL02

6.8.1 System errors

Indication	Problem	Solution
All LEDs are off	The power is off.	Turn the power on.
	The TJ1-FL02 is defective.	Replace the TJ1-FL02.
RUN LED is on, A EN or B EN LED is off	The axis for which EN LED is off is not enabled.	Enable the axis: perform **WDOG=ON** and/or **AXIS_ENABLE** on the axis.
RUN LED is on, A EN or B EN LED flashes	There is an axis error for the axis for which EN LED flashes.	The TJ2-MC__ indicates the number of the axis with an axis error. Remove the cause of the axis error, and clear the axis error or restart the system.

6.9 TJ2-ECT__

6.9.1 System errors

Indication	Problem	Solution
All LEDs are off	The power is off.	Turn the power on.
	The TJ2-ECT__ is defective.	Replace the TJ2-ECT__
ERR LED is ON	Unit error. The TJ2-ECT__ is defective.	Replace the TJ2-ECT__.

6.9.2 Network errors

Indication	Problem	Solution
L/A LED is OFF	No link-partner	Check if the TJ2-ECT__ is properly connected to the first slave and if the first slave is powered on.
ERR LED is flashing	Network error	Check the status of each connected EtherCAT slave.

NOTE
After removing the cause of an error, make sure to re-initialise the EtherCAT network on the unit on which the error appeared.

6.10 GRT1-ECT

6.10.1 Unit power supply errors

The UNIT PWR LED shows if the power supply to the GRT1-ECT and to the SmartSlice I/O system is enough to start-up and operate correctly.

UNIT PWR	Probable cause	Correction
Not lit	No power supply or not enough power supply to the units[1]	• Check whether power is supplied to the unit power supply terminal • Check that the supplied power is in the required range, that is 24 VDC +10% –15% (20.4 to 26.4 VDC)
Flashing	The unit power supply capacity is insufficient	Check the power supply requirement of the entire SmartSlice I/O System and replace the power supply with one that has enough capacity
Lit	No error, the correct power is supplied to the system	

1. The GRT1-ECT can start with less power than specified. In this case, the UNIT PWR LED can be off, although other LEDs can indicate normal operation. However, in this case the correct operation of the whole SmartSlice I/O system is not guaranteed.

6.10.2 I/O power supply errors

The I/O PWR LED shows if the power supply to the external I/O connected to the SmartSlice I/O Units is enough to drive the external outputs on the individual units.

I/O PWR	Probable cause	Correction
Not lit	No power or not enough power supply to the external I/O of the SmartSlice I/O Units	• Check whether power is supplied to the I/O power supply terminal • Check that the supplied power is in the required range, that is 24 VDC +10% –15% (20.4 to 26.4 VDC)
Lit	No I/O power error, the correct power is supplied to the external I/O system	

6.10.3 Unit errors

The GRT1-ECT starts the initialization when the power is turned on. During the initialization, the RUN LED and the ERR LED are off. When the initialization completes, the RUN LED goes on.
Possible errors during the initialization are in the table below.

ERR	Probable cause	Correction
Double Flash	An application watchdog timeout has occurred.	Restart the unit. If the problem persists, replace the unit.
Single flash	Unit has changed its state autonomously, due to local error.	Restart the unit. If the problem persists, replace the unit.
Blinking	General configuration error.	• Unsupported SmartSlice I/O Unit connected to the GRT1-ECT. Remove the Slice. • Configured SmartSlice I/O Unit connected to the GRT1-ECT. Replace the Unit which has a default configuration. • PDO mapping incorrect. Should not occur with TJ2-ECT__
Lit	A critical communication or application error has occurred.	Restart the unit. If the problem persists, replace the unit.

6.10.4 SmartSlice I/O errors

TS	Color	Probable cause	Correction
Not Lit	N/A	No power supply	Refer to section 6.7.1
Flashing (every second)	Green	Adding SmartSlice I/O Units to the network	Wait until the SmartSlice I/O Units are added to the network
		There can be a break in the connection between individual slices, or one of the SmartSlice sockets is not connected properly to its left neighboring connector. The TS LED on all correctly connected slices are flashing, but the TS LED on the not correctly connected units are off.	Check the connection between slices at the point where the first unit is located with its TS LED off. Make sure that all slices are connected correctly to each other.
		The last unit is not or not properly connected. The SmartSlice communication does not start up. The TS LED on all SmartSlice I/O Units are flashing.	Check the connection of the last unit and make sure that it is correctly connected to the SmartSlice system
	Red	SmartSlice bus communication error	Make sure that the base block of the SmartSlice I/O System is connected properly
		When the registration table function is enabled, the actual configuration does not match the registered configuration	Correct the configuration and turn the power on again
		The total number of I/O points in the SmartSlice I/O systems is greater than the maximum	Correct the unit configuration and number of I/O points and turn the power on again
Flashing (every 0.5 seconds)	Green	Restore operation in progress	Wait until the restore operation is complete
		Backup operation in progress	Wait until the backup operation is complete
Lit	Red	Backup operation failed[1]	Do the backup of the data again
		Restore operation failed	Reinstall the unit in which the restore operation was in progress and turn the power on again
		SmartSlice I/O Unit configuration error	Check these items: • Are more than 64 I/O units connected? • Are more than 128 bytes of I/O data used? • Has the I/O configuration changed since the I/O configuration table was registered?
	Green	The Slice bus operates normally	N/A

1. The TS LED is lit for 2 seconds.

6.11 TJ1-KS02

6.11.1 System errors

Indication	Problem	Solution
All LEDs are off	The power is off.	Turn the power on.
	The TJ2-KS02 is defective.	Replace the TJ2-KS02.
RUN LED is on, A EN, B EN or C EN LED is off	The axis for which EN LED is off is not enabled.	Enable the axis: perform **WDOG=ON** and/or **AXIS_ENABLE** on the axis.
RUN LED is on, A EN, B EN or C EN LED flashes	There is an axis error for the axis for which EN LED flashes.	The TJ2-MC__ indicates the number of the axis with an axis error. Remove the cause of the axis error, and clear the axis error or restart the system.

A GRT1-ML2 timing

This appendix describes the I/O timing issues for the communication between the TJ2-MC__, the GRT1-ML2 and the SmartSlice I/O Units. The information in this section is useful for planning operations that require strict control of the I/O timing.
In this section, the following is assumed:

- All required slaves participate in the communication.
- The TJ2-MC__ and the GRT-ML2 have no error indications.
- The I/O configuration is properly registered.

NOTE
To register the I/O configuration, use the REGS dipswitch. See the Trajexia Hardware Reference Manual.

NOTE
If the I/O configuration is not properly registered, the system can operate, but the data exchange is delayed.

- All filter functions in the SmartSlice I/O Units are disabled.

A.1 Timing concepts

A.1.1 Refresh cycles

There are two refresh cycles involved in the timing issues:

- The refresh cycle between the TJ2-MC__ and the GRT1-ML2
- The refresh cycle between the GRT1-ML2 and the SmartSlice I/O Units.

These refresh cycles are independent, they are not synchronized. Therefore a small delay in the communication between the TJ2-MC__ and the SmartSlice I/O Units occurs. The maximum duration of this delay is the longest refresh cycle time. This delay is “quasi-random”, and it is not possible to compensate it. Applications that require more precisely timed I/O must use the onboard I/O of the TJ2-MC__.

fig. 1

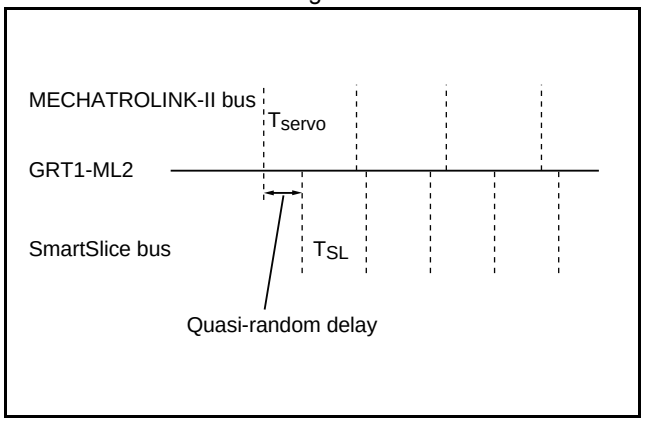

A.1.2 Paging

The maximum amount of data that can be transferred in one servo period with the MECHATROLINK-II protocol is 27 bytes. This is called a page. If the GRT1-ML2 transfers more than 27 bytes of input and/or output data, the data is divided into multiple pages. These pages are transferred in multiple servo periods. The transferred I/O data is only used when all pages are transferred.
The contribution of the individual slices to the I/O data size is described in section 2-2-2 of the GRT1 Series SmartSlice I/O Units Operation Manual (W455).

NOTE
If the number of input pages and the number of output pages are different, the refresh cycle of the input data and the refresh cycle of the output data are also different.

To display the number of pages used, execute the command **MECHATROLINK(unit,38,station,vr)**. This command reads the paging data and stores it in the VR array: first the number of input pages, and then the number of output pages. If **vr** equals -1, the paging data is printed to the Command Line Terminal interface.

NOTE
A system with at most 6 slices typically produces less than 27 bytes of I/O data, in which case the number of pages is 1.

A.2 Examples

The following time variable and other variable definitions are used:

Variable	Definition
T_{ON} T_{OFF} $T_{ON/OFF}$	The ON or OFF delay of the SmartSlice I/O Unit. See the GRT1 Series SmartSlice I/O Units Operation Manual (W455) for more information on input delay times of input units and output delay times of output units. Note: T_{ON} is the ON delay, T_{OFF} is the OFF delay, $T_{ON/OFF}$ is both the ON delay and the OFF delay.
T_{SERVO}	The Trajexia servo period Typically 1ms See the BASIC command **SERVO_PERIOD** in the Trajexia Programming Manual (I52E).
T_{SL}	The refresh cycle of the SmartSlice I/O Units, which is the communication time of the SmartSlice bus. T_{SL} = 0.66 + number of input words of SmartSlice Input Units that use words × 0.022 + number of input bits of SmartSlice Input Units that use bits × 0.009 + number of output words of SmartSlice Output Units that use words × 0.008 + number of output bits of SmartSlice Output Units that use bits × 0.001 ms
T_{CU}	The data processing and synchronisation time of the SmartSlice I/O Units.
PDsize	The Process Data size in bytes, which is the number of bytes needed to transfer all input or output data.
Pages	The number of pages used to transfer all data. The minimum is 1.
T_{ML}	The total MECHATROLINK-II communication time for all data. T_{ML} equals Pages × T_{SERVO}.
T_{SYNC}	The servo interval synchronisation time of the Trajexia program.

Variable	Definition
T_{in}	The input response time: the time between these 2 events: • The SmartSlice Input Unit receives an input signal. • This signal is available to the TJ2-MC__ for processing. $T_{in} = T_{ON/OFF} + T_{SL} + T_{CUin} + T_{MLin} + T_{SERVO}$, where: • 0.1 ms ≤ T_{CUin} ≤ 0.1 + MAX(T_{SL}, T_{MLin}) ms • T_{MLin} = $Pages_{in}$ × T_{SERVO} • $Pages_{in}$ = ($PDsize_{in}$ + 2) / 27 [1], rounded up to the nearest integer
T_{out}	The output response time: the time between these events: • The TJ2-MC__ sets an output signal. • This signal is available to the SmartSlice Output Unit. $T_{out} = T_{SYNC} + T_{MLout} + T_{CUout} + T_{SL} + T_{ON/OFF}$, where: • ±0 ≤ T_{SYNC} ≤ T_{SERVO} • T_{MLout} = $Pages_{out}$ × T_{SERVO} • $Pages_{out}$ = $PDsize_{out}$ / 27, rounded up to the nearest integer • 0.1 ms ≤ T_{CUout} ≤ 0.1 + T_{SL} ms

1. Because the GRT1-ML2 produces 2 bytes of input data (the GRT1-ML2 status word), 2 is added to $PDsize_{in}$.

The following SmartSlice I/O Units, which are used in the examples, have the following ON/OFF delays:

SmartSlice I/O Unit	$T_{ON/OFF}$
GRT1-ID4	0 ms ≤ $T_{ON/OFF}$ ≤ 1.5 ms
GRT1-OD4	0 ms ≤ T_{ON} ≤ 0.5 ms
	0 ms ≤ T_{OFF} ≤ 1.5 ms
GRT1-AD2	0 ms ≤ $T_{ON/OFF}$ ≤ 2 ms
GRT1-DA2	0 ms ≤ $T_{ON/OFF}$ ≤ 2 ms

Furthermore, T_{SERVO} = 1 ms.

fig. 2

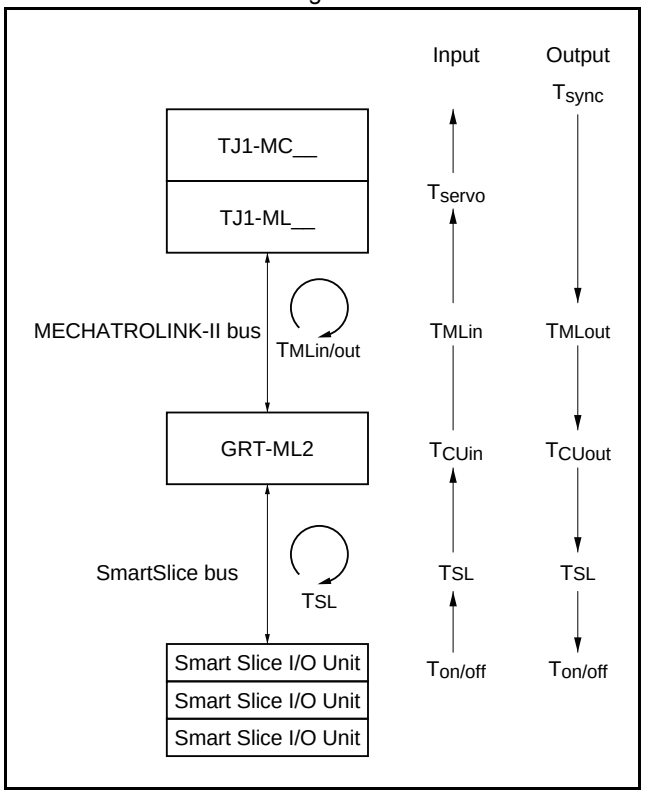

A.2.1 Example 1

Setup of the SmartSlice I/O system: GRT1-ID4 – GRT1-OD4.

T_{SL} = 0.66 + 4 × 0.009 + 4 × 0.001 = 0.7 ms

GRT1-ID4 input response time
($T_{in} = T_{ON/OFF} + T_{SL} + T_{CUin} + T_{MLin} + T_{SERVO}$)

0 + 0.7 + 0.1 + 1 + 1 = 2.8 ms ≤ T_{in} ≤ 1.5 + 0.7 + 1.1 + 1 + 1 = 5.3 ms

GRT1-OD4 output response time
$T_{out} = T_{SYNC} + T_{MLout} + T_{CU} + T_{SL} + T_{ON/OFF}$

0 + 1+ 0.1 + 0.7 + 0 = 1.8 ms ≤ T_{out} ≤ 1 + 1+ 0.8 + 0.7 + 1.5 = 5.0 ms

A.2.2 Example 2

Setup of the SmartSlice I/O system: GRT1-OD4 – GRT1-ID4 – GRT1-OD8 – GRT1-ID8 – GRT1-OD8 – GRT1-ID8 – GRT1-OD8 – GRT1-ID8 – GRT1-OD8 – GRT1-ID8 – GRT1-OD4 – GRT1-DA2 – GRT1-AD2 – GRT1-DA2 – GRT1-DA2 – GRT1-DA2 – GRT1-ID4 – GRT1-ID4

Inputs	Bits	Words	Data size[1]
4 × ID4	4		2 Bytes (Filled up to 1 word)
4 × ID8		4	8 Bytes
1 × AD2		2	4 Bytes
2 × ID4	8		1 Byte
TOTAL	12	6	15 Bytes (15 + 2) / 27, rounded up = 1 Page

1. For the contribution of the individual slices to the I/O data size, see section 2-2-2 of the GRT1 Series SmartSlice I/O Units Operation Manual (W455).

Outputs	Bits	Words	Data size
1 × OD4	4		2 Bytes (Filled up to 1 word)
4 × OD8		4	8 Bytes
1 × OD4	4		2 Bytes (Filled up to 1 word)
4 × DA2		8	16 Byte
TOTAL	8	12	28 Bytes 28 / 27, rounded up = 2 Pages

T_{SL} = 0.66 + 6 × 0.022 + 12 × 0.009 + 12 × 0.008 + 8 × 0.001 = 1.004 ms

GRT1-ID4 input response time
($T_{in} = T_{ON/OFF} + T_{SL} + T_{CUin} + T_{MLin} + T_{SERVO}$)

0 + 1.004 + 0.1 + 1 + 1 = 3.104 ms ≤ T_{in} ≤ 1.5 + 1.004 + 1.104 + 1 + 1 = 5.608 ms

GRT1-AD2 input response time
($T_{in} = T_{ON/OFF} + T_{SL} + T_{CUin} + T_{MLin} + T_{SERVO}$)

0 + 1.004 + 0.1 + 1 + 1 = 3.104 ms ≤ T_{in} ≤ 2.0 + 1.004 + 1.104 + 1 + 1 = 6.108 ms

GRT1-OD4 output response time
($T_{out} = T_{SYNC} + T_{MLout} + T_{CU} + T_{SL} + T_{ON/OFF}$)

0 + 2.0 + 0.1 + 1.004 + 0 = 3.104 ms ≤ T_{out} ≤ 1.0 + 2.0 + 1.104 + 1.004 + 1.5 = 6.608 ms

GRT1-DA2 output response time
($T_{out} = T_{SYNC} + T_{MLout} + T_{CU} + T_{SL} + T_{ON/OFF}$)

0 + 2.0 + 0.1 + 1.004 + 2= 5.104 ms ≤ T_{out} ≤ 1.0 + 2.0 + 1.104 + 1.004 + 2 = 7.108 ms

Revision history

A manual revision code shows as a suffix to the catalogue number on the front cover of the manual.

Revision code	Date	Revised content
01	February 2010	First version
02	January 2011	TJ2-ECT__ EtherCAT master added GRT1-ECT EtherCAT SmartSlice coupler added
03	July 2011	GX-series and FZM1-ECT added
04	February 2012	Delta robot support added
05	June 2012	TJ2-KS02 and TJ2-MC02 support added

OMRON EUROPE B.V. Wegalaan 67-69, NL-2132 JD, Hoofddorp, The Netherlands. Tel: +31 (0) 23 568 13 00 Fax: +31 (0) 23 568 13 88 www.industrial.omron.eu

Austria
Tel: +43 (0) 2236 377 800
www.industrial.omron.at

Belgium
Tel: +32 (0) 2 466 24 80
www.industrial.omron.be

Czech Republic
Tel: +420 234 602 602
www.industrial.omron.cz

Denmark
Tel: +45 43 44 00 11
www.industrial.omron.dk

Finland
Tel: +358 (0) 207 464 200
www.industrial.omron.fi

France
Tel: +33 (0) 1 56 63 70 00
www.industrial.omron.fr

Germany
Tel: +49 (0) 2173 6800 0
www.industrial.omron.de

Hungary
Tel: +36 1 399 30 50
www.industrial.omron.hu

Italy
Tel: +39 02 326 81
www.industrial.omron.it

Netherlands
Tel: +31 (0) 23 568 11 00
www.industrial.omron.nl

Norway
Tel: +47 (0) 22 65 75 00
www.industrial.omron.no

Poland
Tel: +48 22 645 78 60
www.industrial.omron.pl

Portugal
Tel: +351 21 942 94 00
www.industrial.omron.pt

Russia
Tel: +7 495 648 94 50
www.industrial.omron.ru

South-Africa
Tel: +27 (0)11 579 2600
www.industrial.omron.co.za

Spain
Tel: +34 913 777 900
www.industrial.omron.es

Sweden
Tel: +46 (0) 8 632 35 00
www.industrial.omron.se

Switzerland
Tel: +41 (0) 41 748 13 13
www.industrial.omron.ch

Turkey
Tel: +90 212 467 30 00
www.industrial.omron.com.tr

United Kingdom
Tel: +44 (0) 870 752 08 61
www.industrial.omron.co.uk

Authorised Distributor:

Note:
Although we do strive for perfection, Omron Europe BV and/or its subsidiary and affiliated companies do not warrant or make any representations regarding the correctness or completeness of information described in this catalogue. Product information in this catalogue is provided ‚as is' without warranty of any kind, either express or implied, including, but not limited to, the implied warranties of merchantability, fitness for a particular purpose, or non-infringement. In a jurisdiction where the exclusion of implied warranties is not valid, the exclusion shall be deemed to be replaced by such valid exclusion, which most closely matches the intent and purpose of the original exclusion. Omron Europe BV and/or its subsidiary and affiliated companies reserve the right to make any changes to the products, their specifications, data at its sole discretion at any time without prior notice. The material contained in this catalogue may be out of date and Omron Europe BV and/or its subsidiary and affiliated companies make no commitment to update such material.

Cat. No. I58E-EN-05